DO NOT SCALE | IF IN DOUBT ASK | ALL DIMESNIONS ARE IN mm

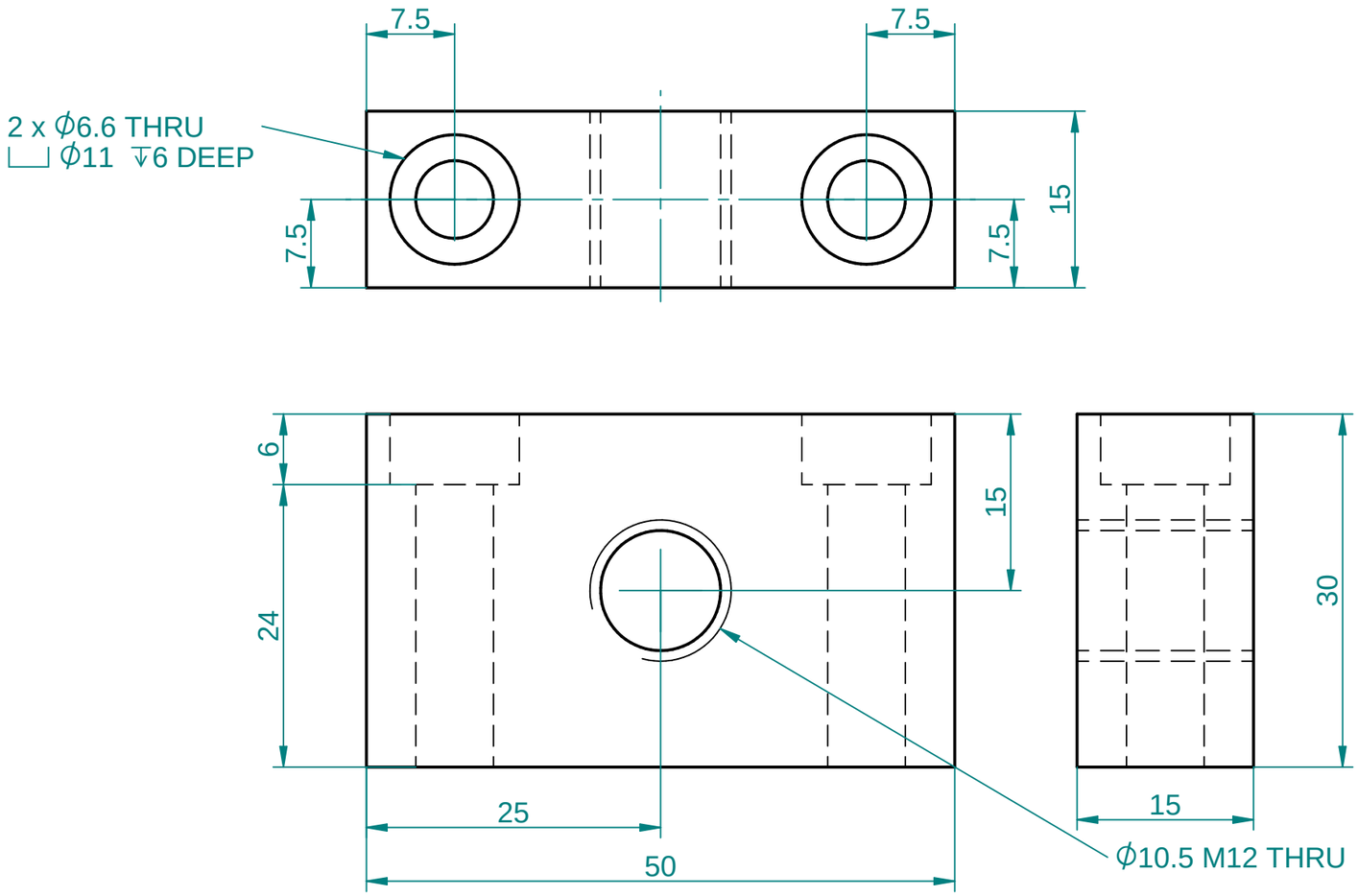

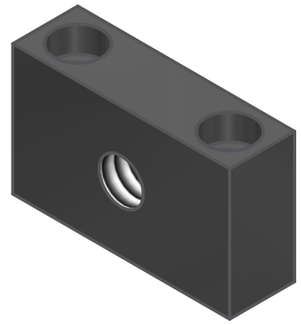

Notes:

1. Debur all corners unless specified.
2. Tappings to be done after coating.
3. Mark each part with its drawing number.
4. Specified tolerances are to be maintained after coating.
5. Stress relieving to be done after welding/before machining.

BUFF

SURFACE FINISH SYMBOLS	
	UNMACHINED
▽	12.5µm-25µm (Ra)
▽▽	1.6µm-6.3µm (Ra)
▽▽▽	0.2µm-0.8µm (Ra)

GENERAL TOL			
MACHINING SIZE	ABOVE 1 - 10	±0.10	
	ABOVE 10 - 100	±0.15	
	ABOVE 100 - 500	±0.25	
	ABOVE 500 -	±0.50	
	ANGLE	±1	° 30'
MACHINING SIZE SHAFT HOLE PCKS		HOLE	SHAFT
	ABOVE 1 - 10	+0.2 / 0.0	0.0 / -0.2
	ABOVE 10 - 100	+0.3 / 0.0	0.0 / -0.3
	ABOVE 100 - 500	+0.5 / 0.0	0.0 / -0.5
	ABOVE 500 -	+1.0 / 0.0	0.0 / -1.0
WELDING	ABOVE 1 - 100	±2.5	
	ABOVE 150	±2.5	

DWG NO. CC0090A0111000M		DRAWN BY SWAPNIL	SIGN	STAMP (APP. AUTH.)	DRAWN DATE 30-Jan-2021
REF. ASSLY. CC0090A0100000A		CHKD BY RDS	SIGN.		DATE OF ISSUE
PART NAME LT CC Tensioner Mtg Block		APPD BY BKS	SIGN.		SHEET NO. 1 of 1
MATERIAL IS2062 E250A	WEIGHT(Kg) 0.145	COATING/HEAT TREATMENT/FINISH Zn, 10-20 microns		SCALE NTS	SIZE A3 / REV.

Addverb Technologies

This drawing is a business secret of Addverb Tech. Pvt. Ltd. and/or the company herein, and any act to copy, use or transfer this drawing without prior approval is illegal misconduct.