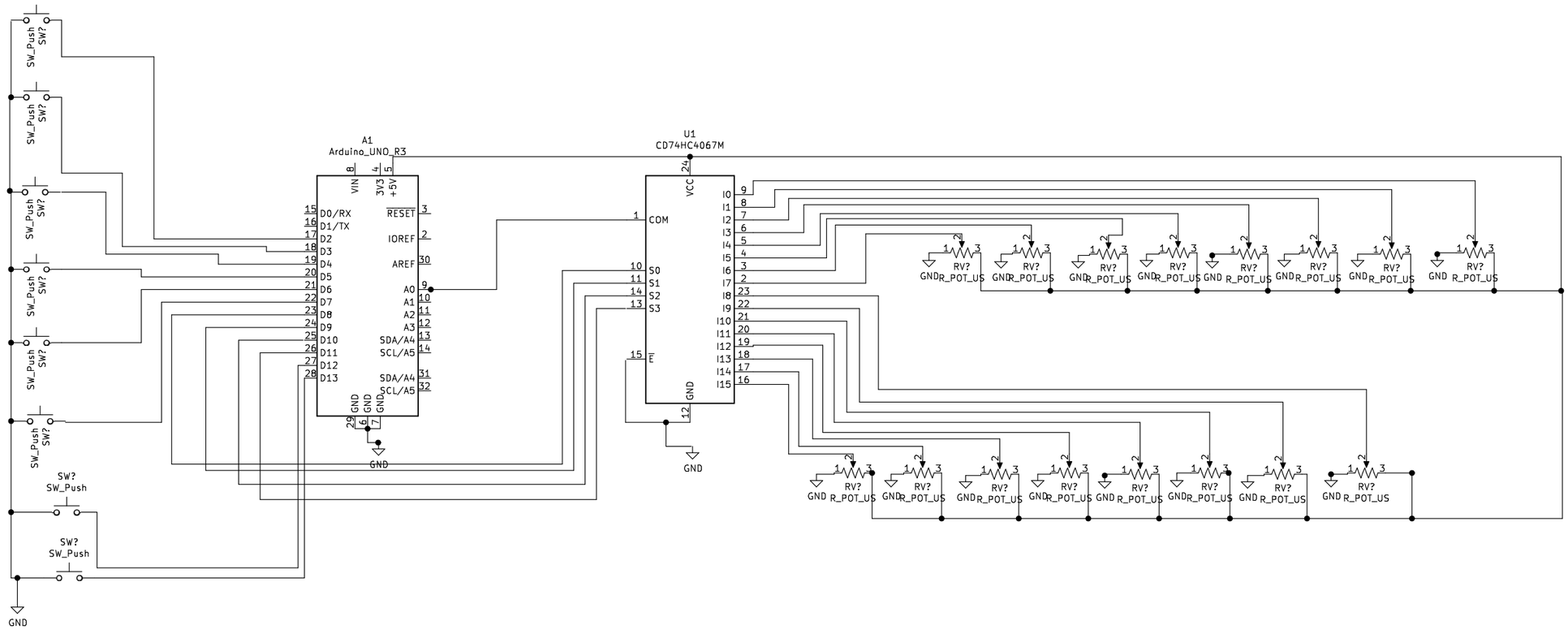

Sheet: /
File: Midi Controller UNO MK2.sch

Title:

Size: A3	Date:	Rev:
KiCad E.D.A. kicad 5.99.0+really5.1.10+dfsg1-1		Id: 1/1