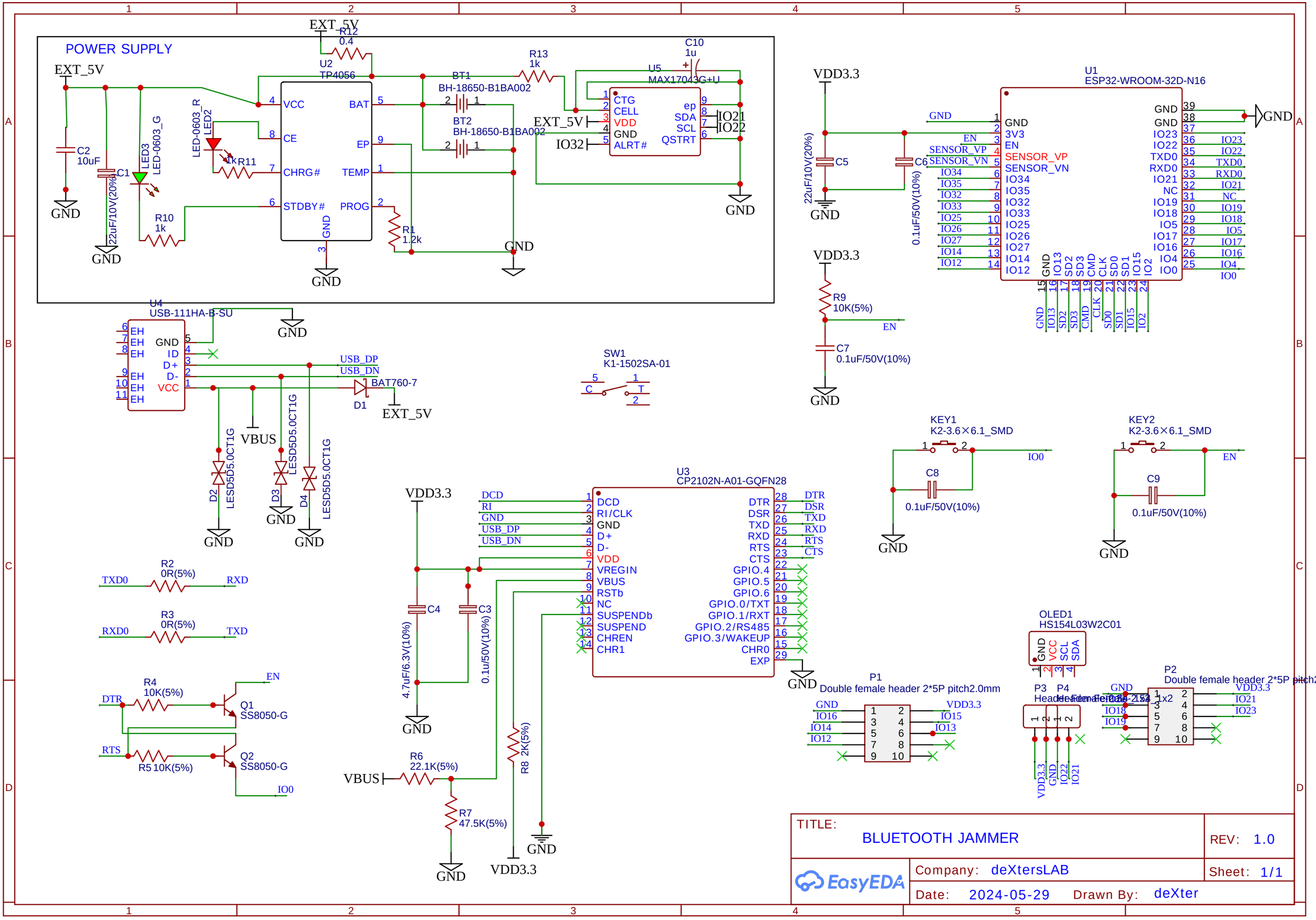
POWER SUPPLY
EXT_5V
R12
0.4
U2
TP4056
VCC
CE
CHRG#
STDBY#
BAT
EP
TEMP
PROG
GND
C2
10uF
C1
22uF/10V(20%)
LED3
LED-0603_G
LED-0603_R
LED2
1k
R11
R10
1k
R1
1.2k
BT1
BH-18650-B1BA002
BT2
BH-18650-B1BA002
R13
1k
C10
1u
U5
MAX17043G+U
CTG
CELL
VDD
GND
ALRT#
ep
SDA
SCL
QSTRT
IO21
IO22
IO32
U1
ESP32-WROOM-32D-N16
GND
3V3
EN
SENSOR_VP
SENSOR_VN
IO34
IO35
IO32
IO33
IO25
IO26
IO27
IO14
IO12
IO23
IO22
TXD0
RXD0
IO21
NC
IO19
IO18
IO5
IO17
IO16
IO4
IO0
IO13
SD2
SD3
CMD
CLK
SD0
SD1
IO15
IO2
VDD3.3
C5
22uF/10V(20%)
C6
0.1uF/50V(10%)
R9
10K(5%)
C7
0.1uF/50V(10%)
U4
USB-111HA-B-SU
EH
ID
D+
D-
USB_DP
USB_DN
BAT760-7
D1
VBUS
D2
D3
D4
LESD5D5.0CT1G
SW1
K1-1502SA-01
C
T
KEY1
K2-3.6×6.1_SMD
C8
0.1uF/50V(10%)
KEY2
K2-3.6×6.1_SMD
C9
0.1uF/50V(10%)
U3
CP2102N-A01-GQFN28
DCD
RI
RI/CLK
D+
D-
VREGIN
RSTb
SUSPENDb
SUSPEND
CHREN
CHR1
DTR
DSR
TXD
RXD
RTS
CTS
GPIO.4
GPIO.5
GPIO.6
GPIO.0/TXT
GPIO.1/RXT
GPIO.2/RS485
GPIO.3/WAKEUP
CHR0
EXP
C4
4.7uF/6.3V(10%)
C3
0.1u/50V(10%)
R8
2K(5%)
R6
22.1K(5%)
R7
47.5K(5%)
R2
0R(5%)
R3
0R(5%)
R4
10K(5%)
R5
10K(5%)
Q1
SS8050-G
Q2
SS8050-G
OLED1
HS154L03W2C01
P1
Double female header 2*5P pitch2.0mm
P2
Double female header 2*5P pitch2.0mm
P3
P4
TITLE:
BLUETOOTH JAMMER
REV: 1.0
Company: deXtersLAB
Sheet: 1/1
Date: 2024-05-29
Drawn By: deXter
EasyEDA