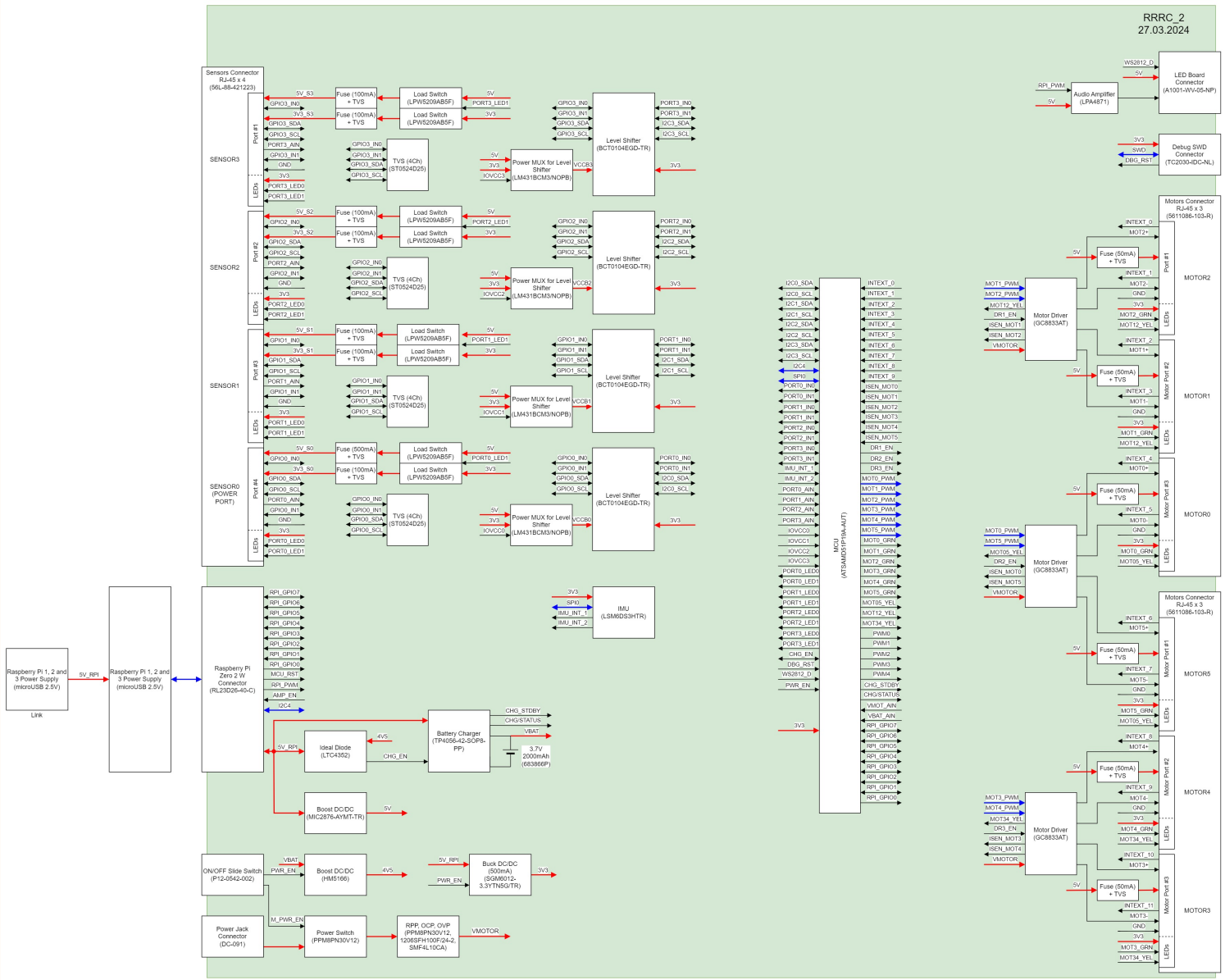

Table of Contents

Sheetname	Page number
Title	1
Power	2
MCU	3
Sensor Ports	4
Level Shifters	5
Motor Ports	6
RPi Connector	7
Mechanicals	8

Revision	Date	Change
1.1	08.07.2021	Initial version
2.2	01.06.2022	Some components were changed
3.3	15.04.2024	Debug connector and U14 were changed

Project Name	RRRC v2		
Title	Title	Revision	3.3.0
Size A2	Author Aleksandr Dudko	Reviewed NO	Approved NO
Date: 15.04.2024		Sheet 1	of 8

SOFTEQ
SOFTEQ DEVELOPMENT CORP
1115 Dairy Ashford Suite 125
Houston TX 77069
Tel: 281.552.5000
www.softeq.com

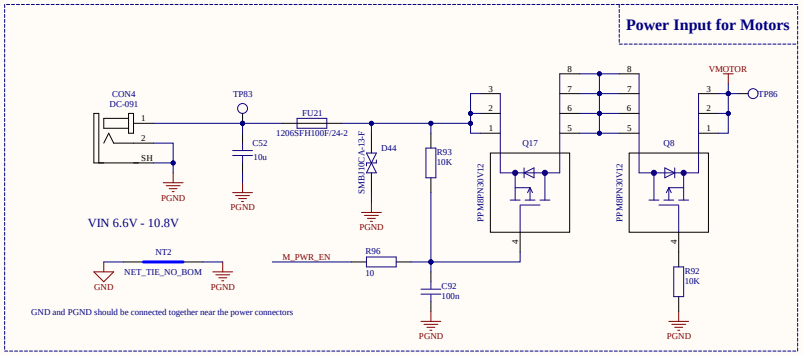

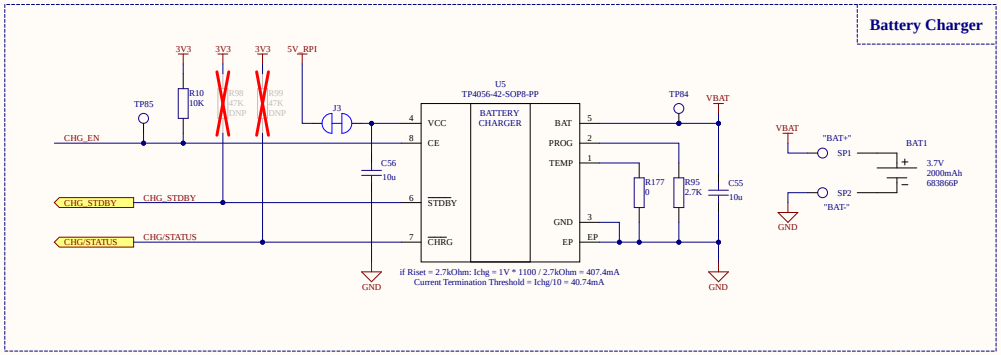

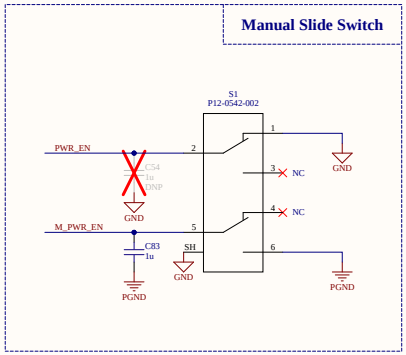

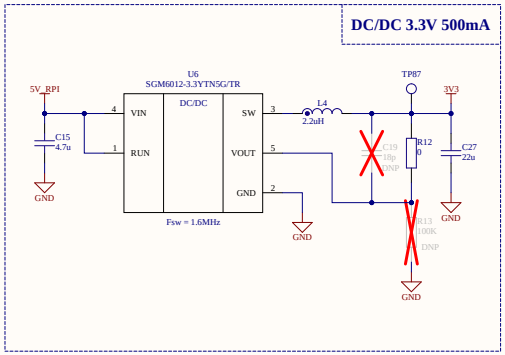

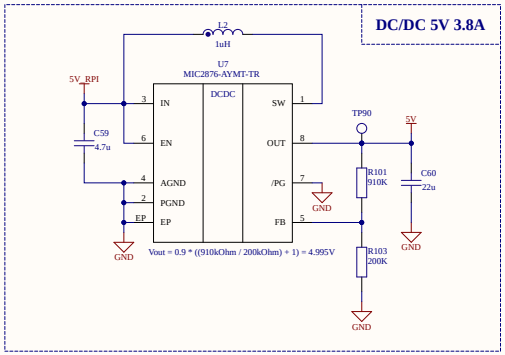

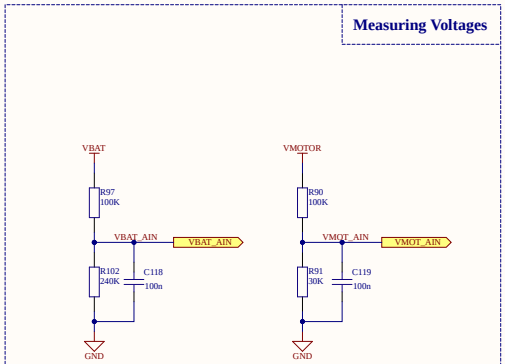

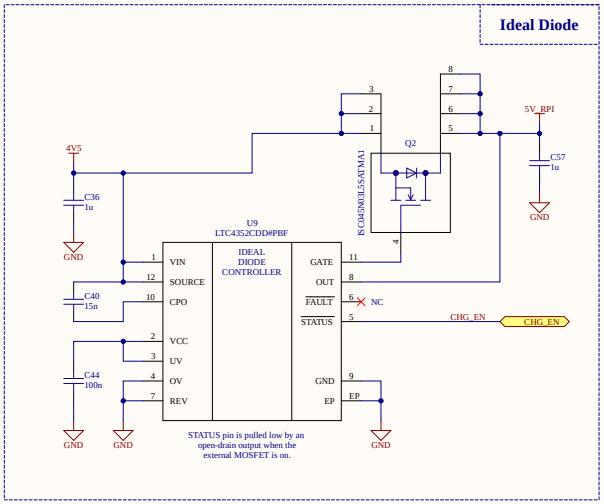

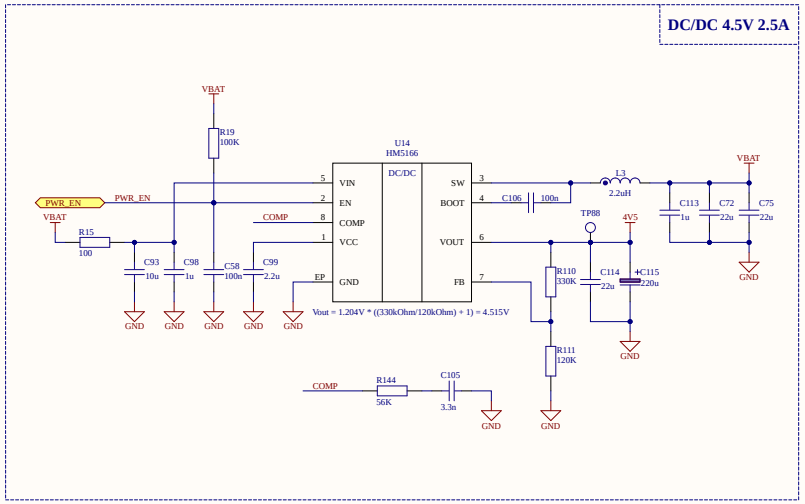

Project Name	RRRC v2		SOFTEQ
Title	Power	Revision 3.3.0	SOFTEQ DEVELOPMENT CORP 1115 Dairy Ashford Suite 125 Houston TX 77069 Tel: 281.552.5000 www.softeq.com
Size A2	Author Aleksandr Dudko	Reviewed NO	Approved NO
Date: 15.04.2024		Sheet 2	of 8

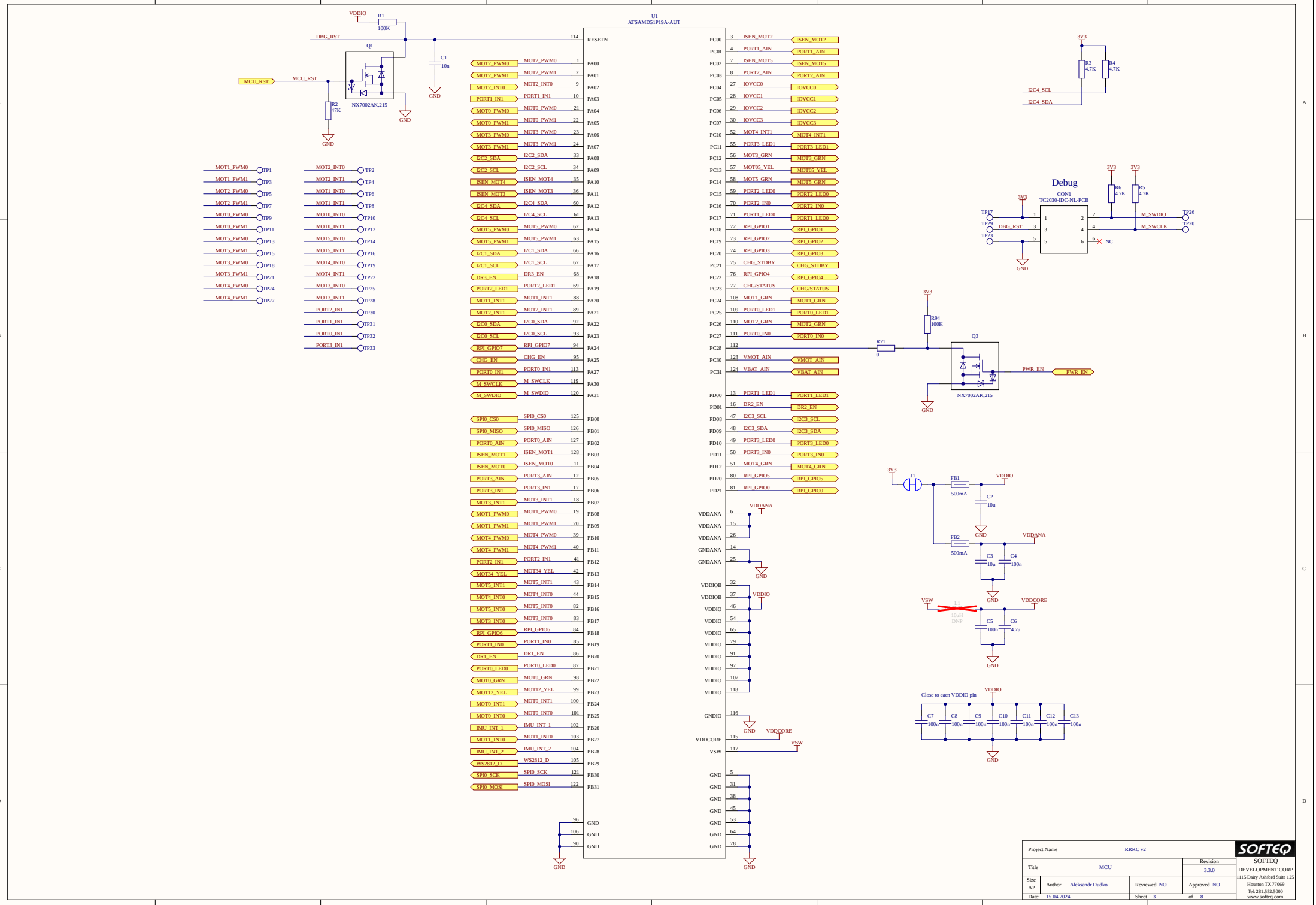

Project Name	RRRC v2		SOFTEQ
Title	MCU	Revision 3.3.0	SOFTEQ DEVELOPMENT CORP 1115 Dairy Ashford Suite 125 Houston TX 77069 Tel: 281.552.5000 www.softeq.com
Size A2	Author Aleksandr Dudko	Reviewed NO	Approved NO
Date: 15.04.2024		Sheet 3	of 8

Port array for sensors

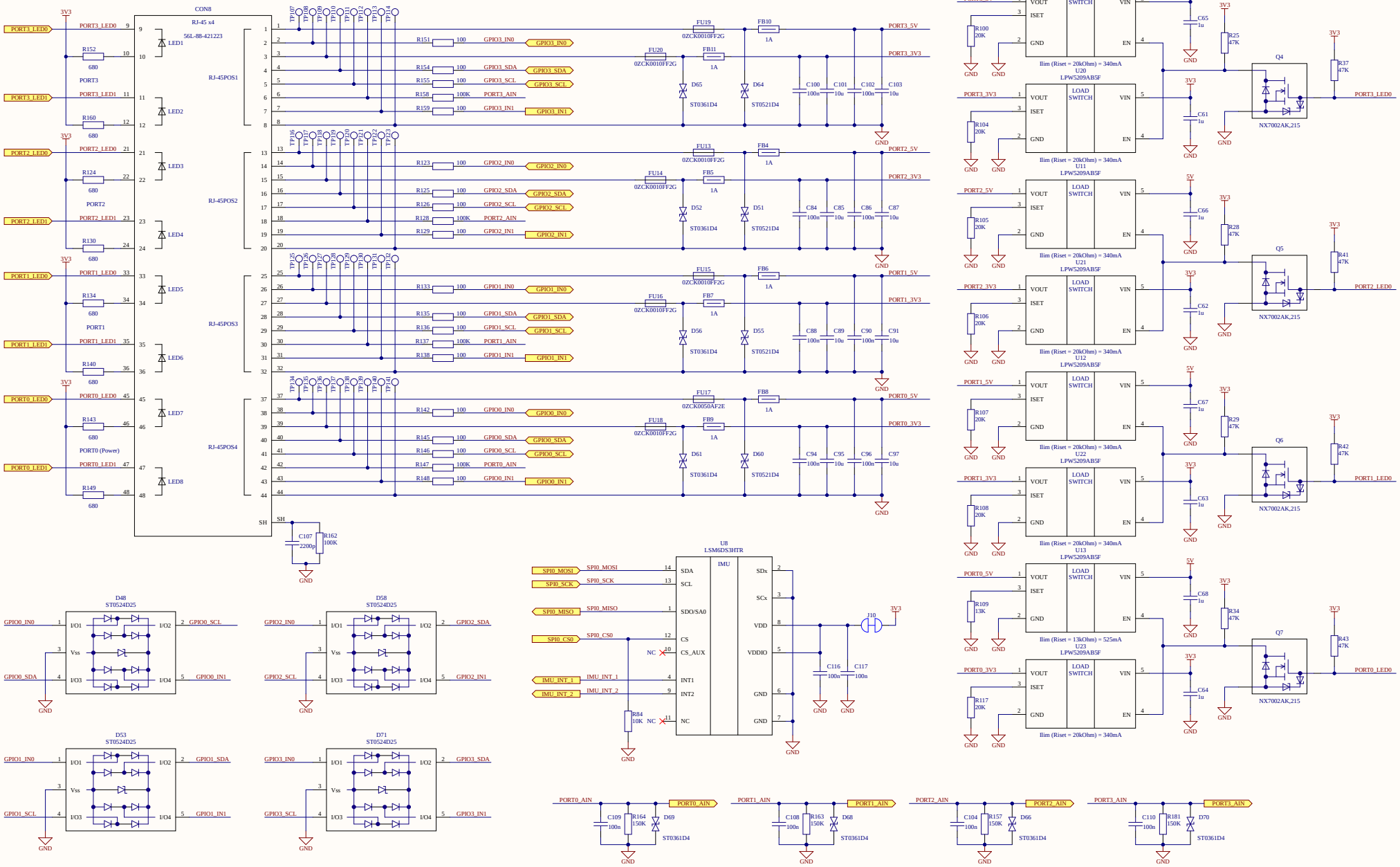

Project Name	RRRC v2		SOFTEQ
Title	Sensor Ports	Revision 3.3.0	SOFTEQ DEVELOPMENT CORP 1115 Dairy Ashford Suite 125 Houston TX 77069 Tel: 281.552.5000 www.softeq.com
Size A2	Author Aleksandr Dudko	Reviewed NO	Approved NO
Date: 15.04.2024		Sheet 4	of 8

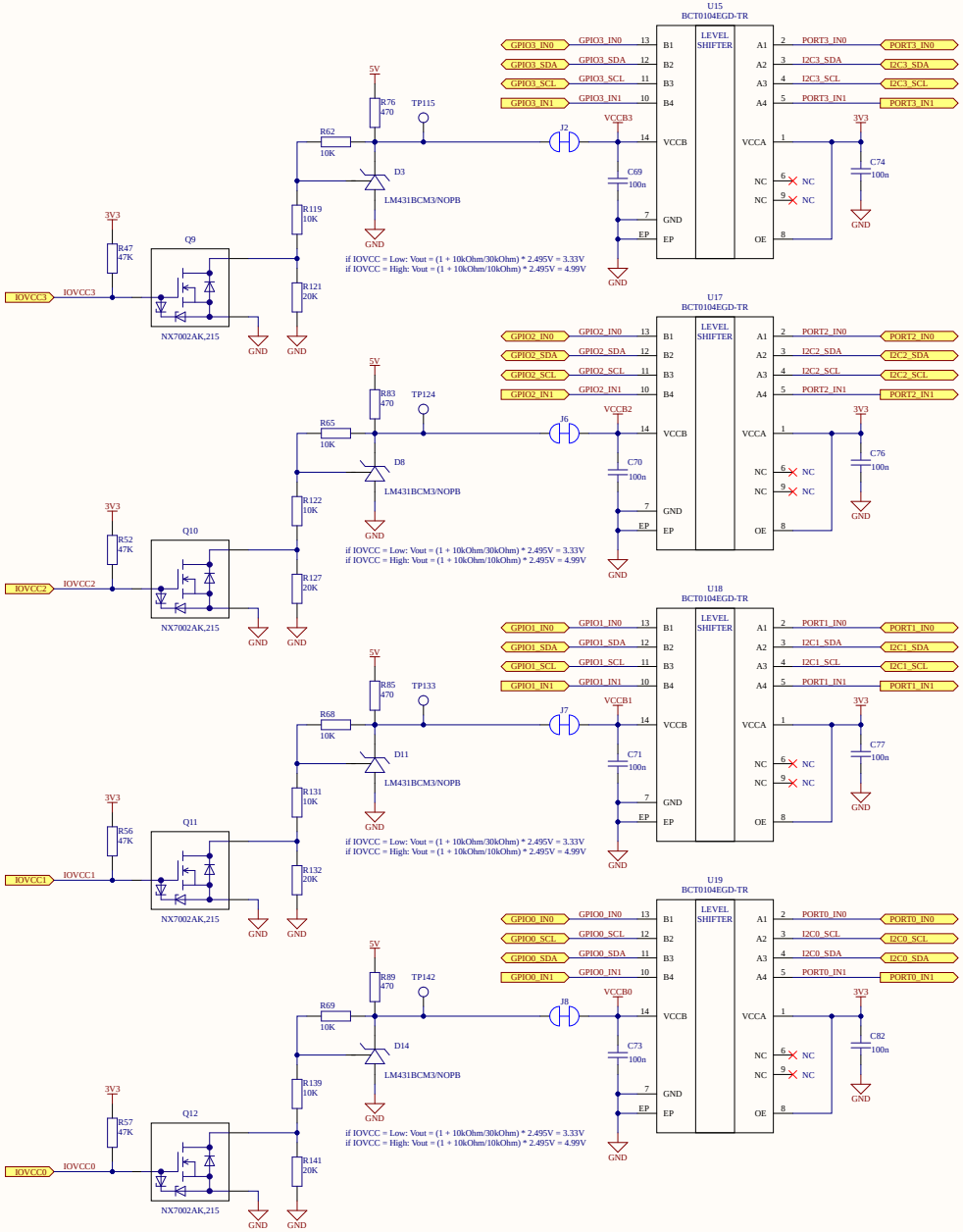

Project Name	RRRC v2		SOFTEQ
Title	Level Shifters	Revision 3.3.0	SOFTEQ DEVELOPMENT CORP 1115 Dairy Ashford Suite 125 Houston TX 77069 Tel: 281.552.5000 www.softeq.com
Size A2	Author Aleksandr Dudko	Reviewed NO	Approved NO
Date: 15.04.2024		Sheet 5	of 8

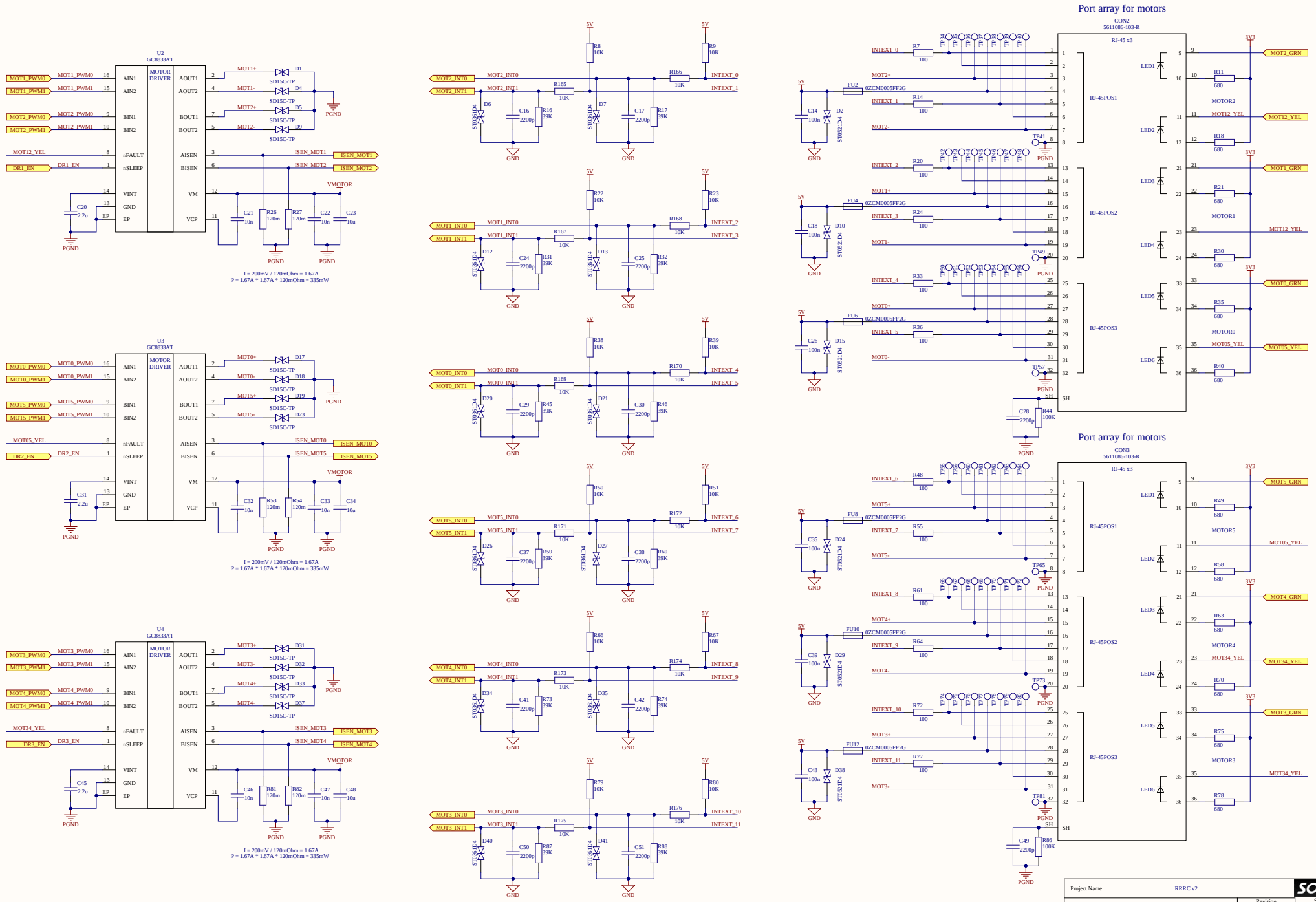
Port array for motors
CON2
5611086-103-R
RJ-45 x3
RJ-45POS1
RJ-45POS2
RJ-45POS3
MOTOR2
MOTOR1
MOTOR0
U2
GC8833AT
MOTOR DRIVER
AIN1
AIN2
BIN1
BIN2
nFAULT
nSLEEP
VINT
GND
EP
AOUT1
AOUT2
BOUT1
BOUT2
AISEN
BISEN
VM
VCP
MOT1_PWM0
MOT1_PWM1
MOT2_PWM0
MOT2_PWM1
MOT12_YEL
DR1_EN
ISEN_MOT1
ISEN_MOT2
VMOTOR
PGND
I = 200mV / 120mOhm = 1.67A
P = 1.67A * 1.67A * 120mOhm = 335mW
U3
GC8833AT
MOT0_PWM0
MOT0_PWM1
MOT5_PWM0
MOT5_PWM1
MOT05_YEL
DR2_EN
ISEN_MOT0
ISEN_MOT5
U4
GC8833AT
MOT3_PWM0
MOT3_PWM1
MOT4_PWM0
MOT4_PWM1
MOT34_YEL
DR3_EN
ISEN_MOT3
ISEN_MOT4
5V
GND
MOT2_INT0
MOT2_INT1
MOT1_INT0
MOT1_INT1
MOT0_INT0
MOT0_INT1
MOT5_INT0
MOT5_INT1
MOT4_INT0
MOT4_INT1
MOT3_INT0
MOT3_INT1
INTEXT_0
INTEXT_1
INTEXT_2
INTEXT_3
INTEXT_4
INTEXT_5
INTEXT_6
INTEXT_7
INTEXT_8
INTEXT_9
INTEXT_10
INTEXT_11
MOT2+
MOT2-
MOT1+
MOT1-
MOT0+
MOT0-
MOT5+
MOT5-
MOT4+
MOT4-
MOT3+
MOT3-
MOT2_GRN
MOT12_YEL
MOT1_GRN
MOT12_YEL
MOT0_GRN
MOT05_YEL
MOT5_GRN
MOT05_YEL
MOT4_GRN
MOT34_YEL
MOT3_GRN
MOT34_YEL
3V3
CON3
5611086-103-R
Project Name
RRRC v2
Title
Motor Ports
Revision
3.3.0
Size
A2
Author
Aleksandr Dudko
Reviewed NO
Approved NO
Date: 15.04.2024
Sheet 6 of 8
SOFTEQ
SOFTEQ
DEVELOPMENT CORP
1115 Dairy Ashford Suite 125
Houston TX 77069
Tel: 281.552.5000
www.softeq.com

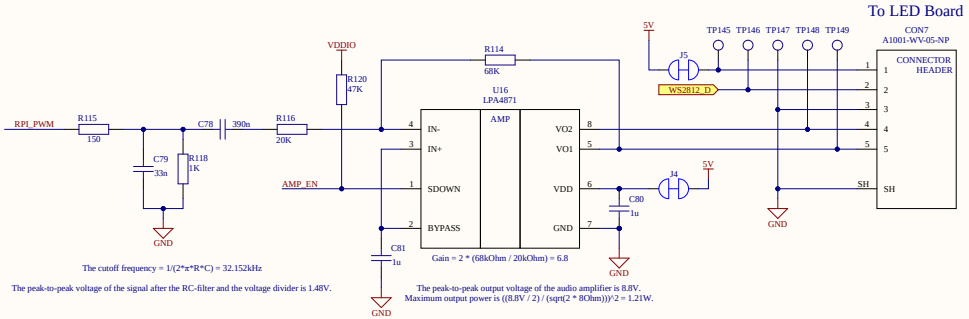

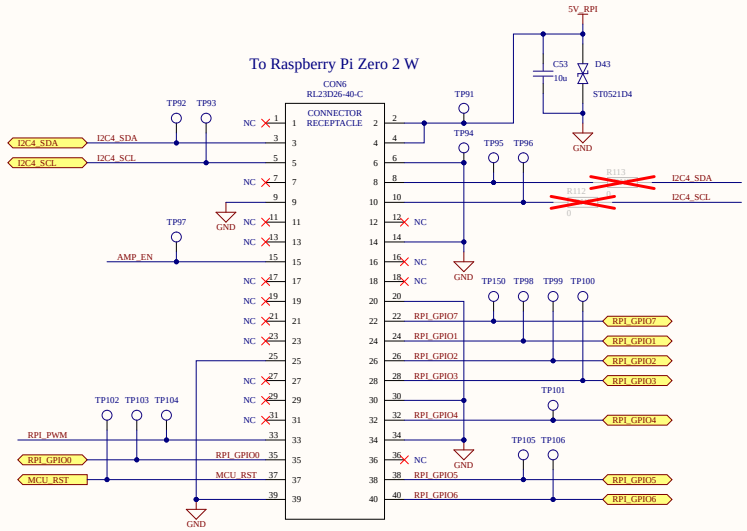

Project Name	RRRC v2		SOFTEQ
Title	RPi Connector	Revision 3.3.0	SOFTEQ DEVELOPMENT CORP 1115 Dairy Ashford Suite 125 Houston TX 77069 Tel: 281.552.5000 www.softeq.com
Size A2	Author Aleksandr Dudko	Reviewed NO	Approved NO
Date: 15.04.2024		Sheet 7	of 8

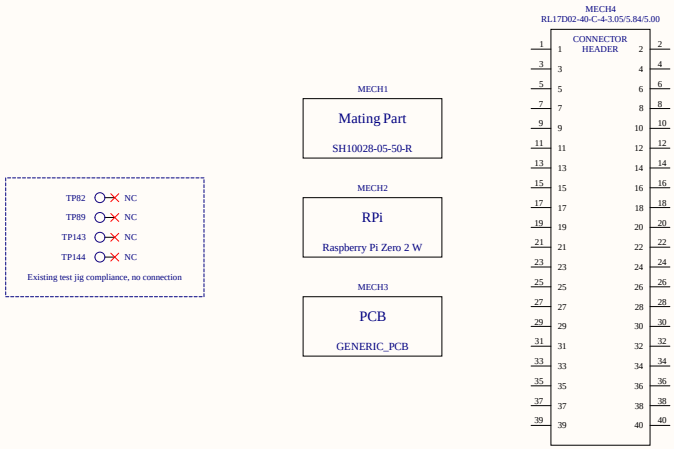

Project Name	RRRC v2		
Title	Mechanicals		Revision 3.3.0
Size A2	Author Aleksandr Dudko	Reviewed NO	Approved NO
Date: 15.04.2024		Sheet 8	of 8

SOFTEQ
SOFTEQ DEVELOPMENT CORP
1115 Dairy Ashford Suite 125
Houston TX 77069
Tel: 281.552.5000
www.softeq.com