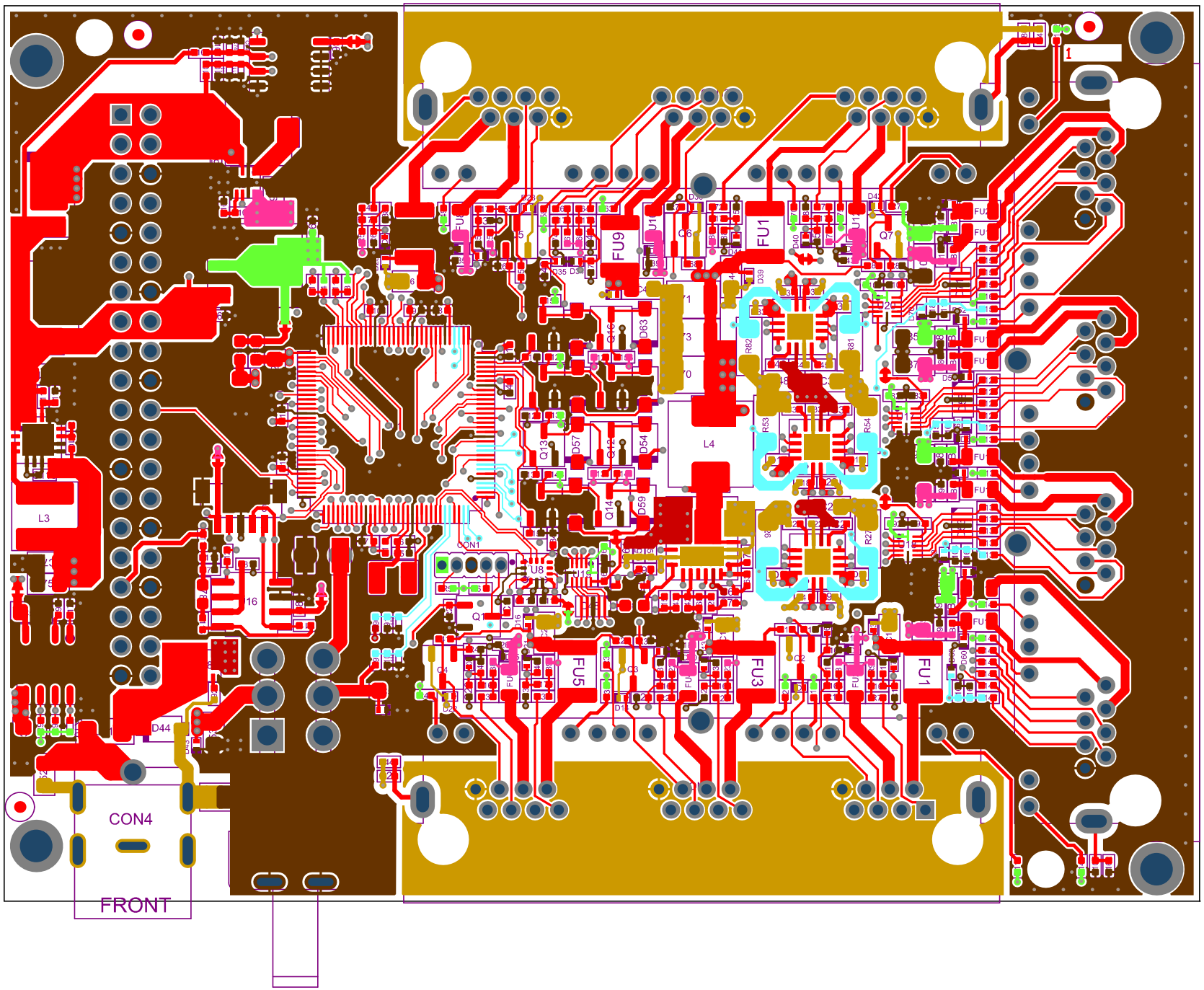

ASSEMBLY DRAWING TOP

Unplaced (DNP) components are crossed

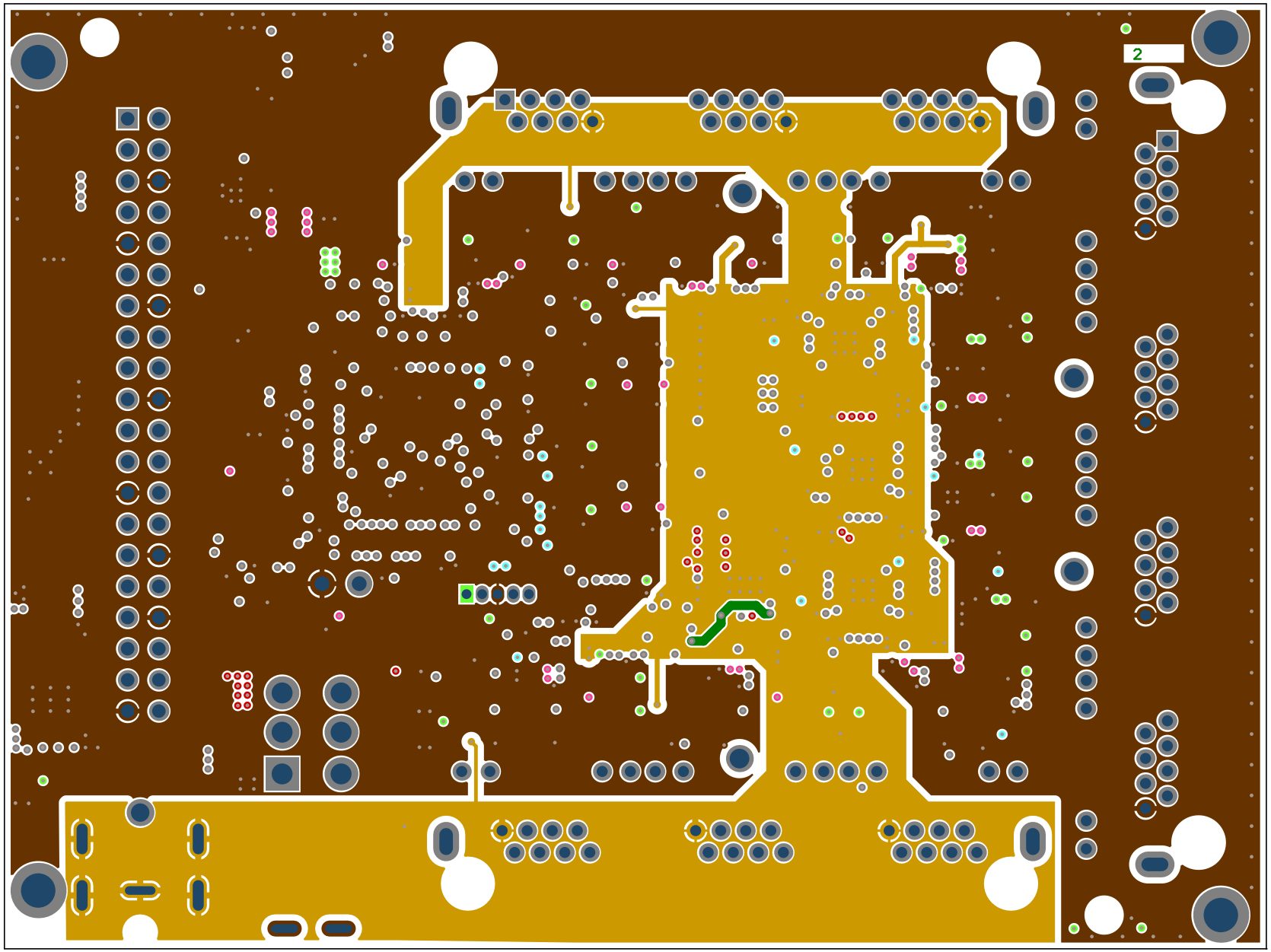
2

3

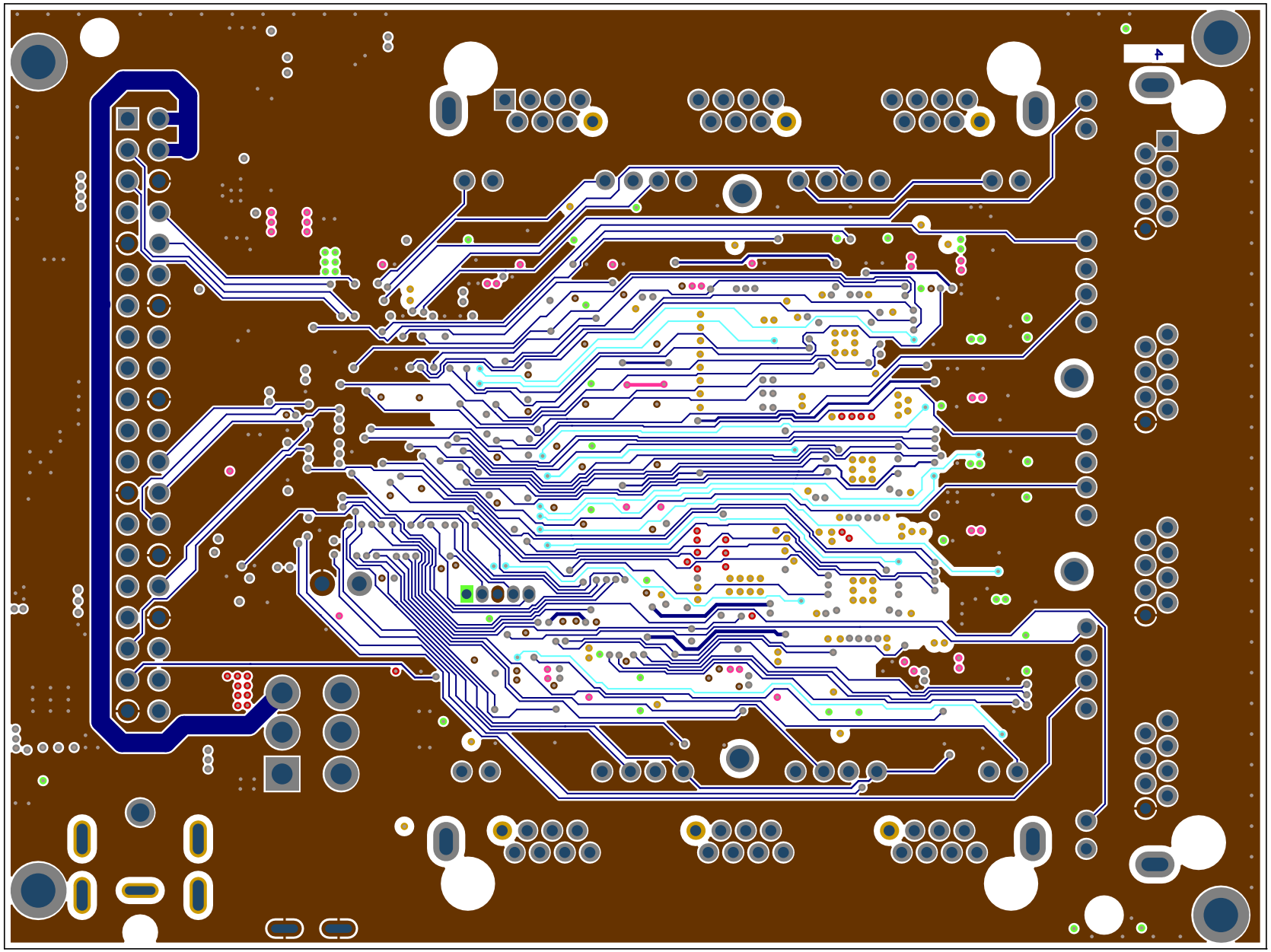

2

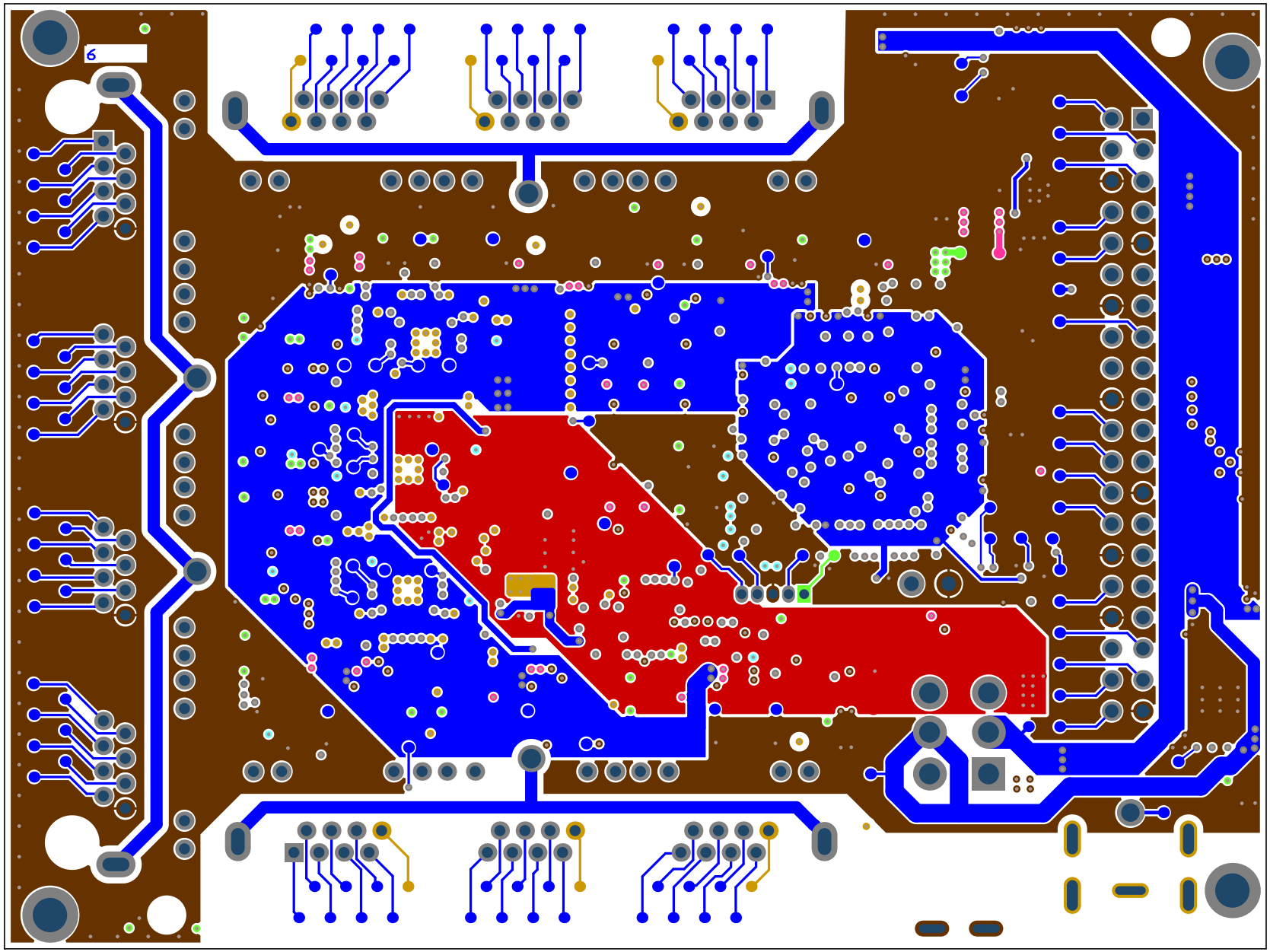
6