REVISION RECORD				
REV	ECO	DESCRIPTION	DRFT	CHKD

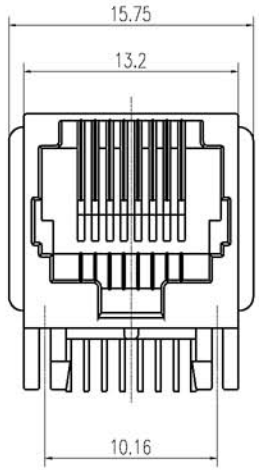

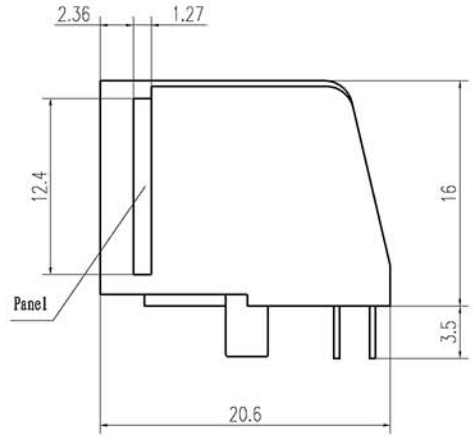

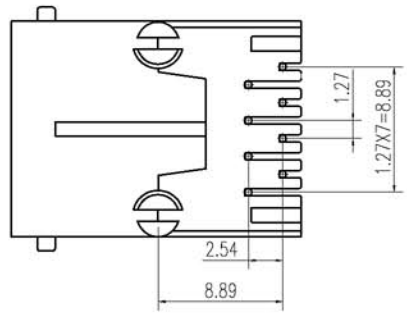

PCB LAYOUT

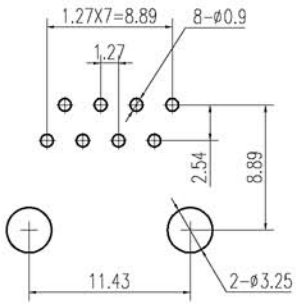

NOTES:

ELECTRICAL:

1. VOLTAGE RATING :125 VAC RMS.
2. CURRENT RATING :1.5 AMP.
3. CONTACT RESISTANCE :30 MILLIOHMS MAX.
4. INSULATION RESISTANCE :500 MEGOHMS MIN @ 500V DC .
5. DIELECTRIC STRENGTH :1000V AC RMS 50Hz. 1MIN.

MECHANICAL:

1. HOUSING MATERIAL :GLASS FILLED POLYESTER UL94V-0.
2. CONTACT MATERIAL :PHOSPHOR BRONZE ø0.46mm.
3. PLATING :GOLD PLATING OVER NICKEL.
4. OPERATING :750 CYCLES MIN.
5. PCB RETENTION PRE-SOLDER :1 LB MIN.

ENVIRONMENTAL:

1. Temperature Range : -45℃～+85℃
2. Relative Humidity : 90～95% (40±2℃)

PART NUMBER:

DY 143 - □ - □ - □ - □

- □3u″ □6u″ □15u″ □30u″ □50u″ □PD20u″
- □W(With Panel) □W/O(Without Panel)
- □S(Split Peg) □L(L Peg)
- □4P2C □4P4C
- Part No.

DETACHED LISTS	mm (inch)	DFTO:	DATE:	深圳市国致电子有限公司 SHEN ZHEN GUOZHI TECHNOLOGY ELECTRONICS CO,LTD
		CHKD:	DATE:	
	Tolerance Exept as Noted	MFO:	DATE:	
	mm 0±0.2 ± 00±0.15 ± 000±0.075 ±	APPVL:	DATE:	144-L
		MATERIAL:		
	ANGLES ± 0.5	Q`TY:	DRAWING NO.	SIZE A4 / REV 06/05/02 0
		FINISH:	/PART NO.	
		SCALE: 2:1	DO NOT SCALE DRAWING	SHEET OF