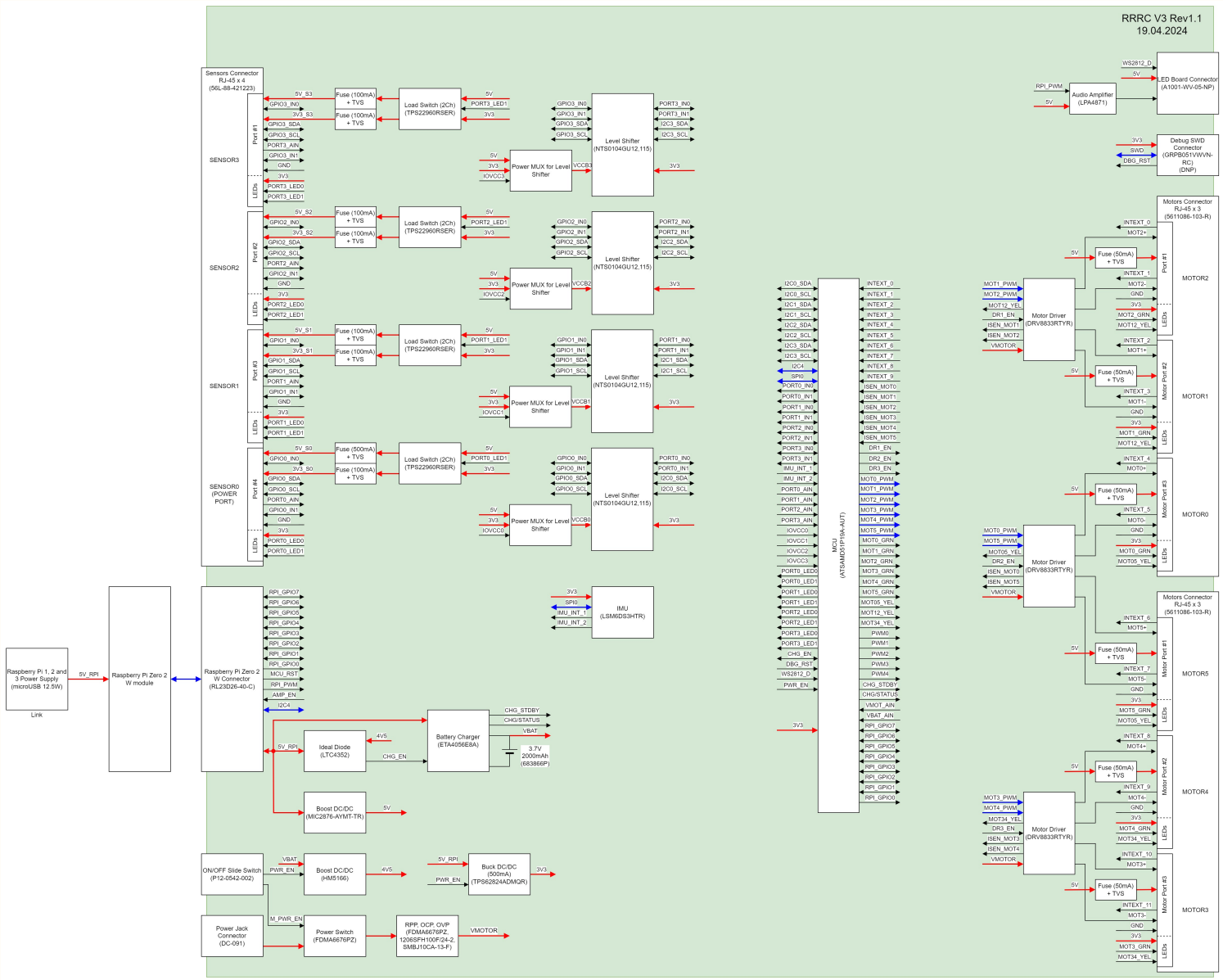

Table of Contents

Sheetname	Page number
Title	1
Power	2
MCU	3
Sensor Ports	4
Level Shifters	5
Motor Ports	6
RPi Connector	7
Mechanicals	8

Revision	Date	Change
1.1	19.04.2024	Initial version

Project Name	RRRC V3		SOFTEQ
Title	Title	Revision 2.2.0	SOFTEQ DEVELOPMENT CORP 1115 Dairy Ashford Suite 125 Houston TX 77069 Tel: 281.552.5000 www.softeq.com
Size A2	Author Aleksandr Dudko	Reviewed NO	Approved YES
Date: 19.04.2024		Sheet 1	of 8

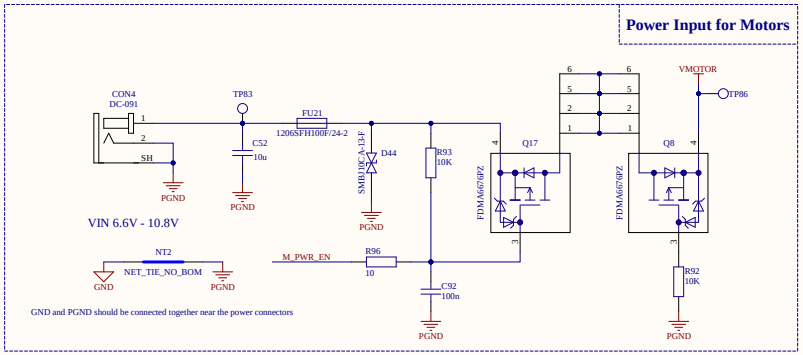

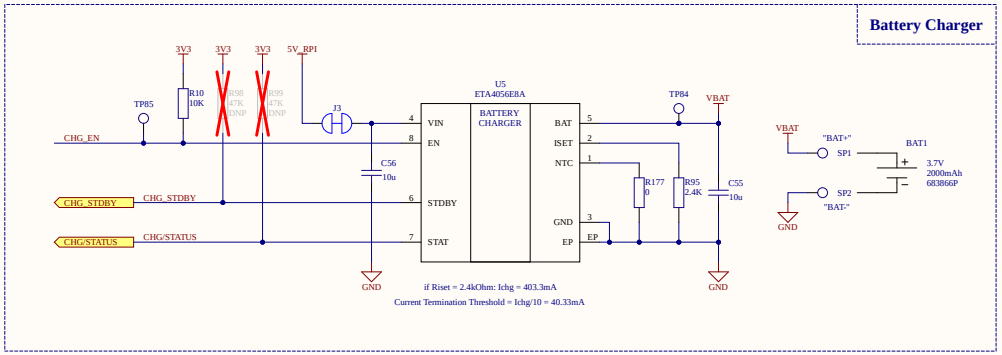

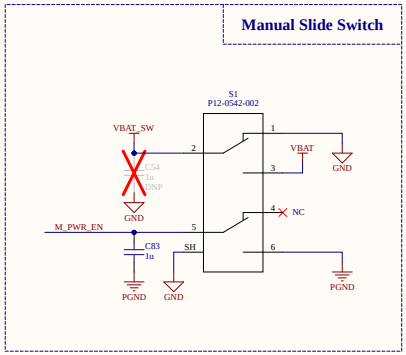

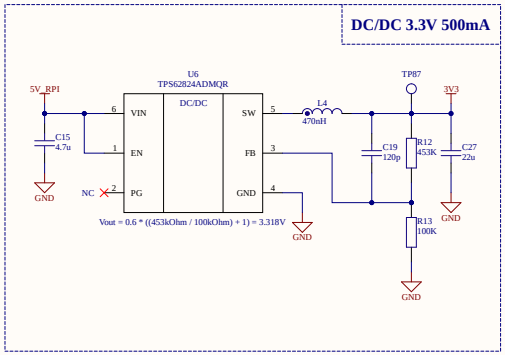

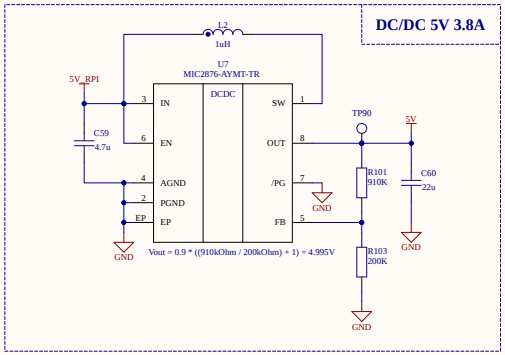

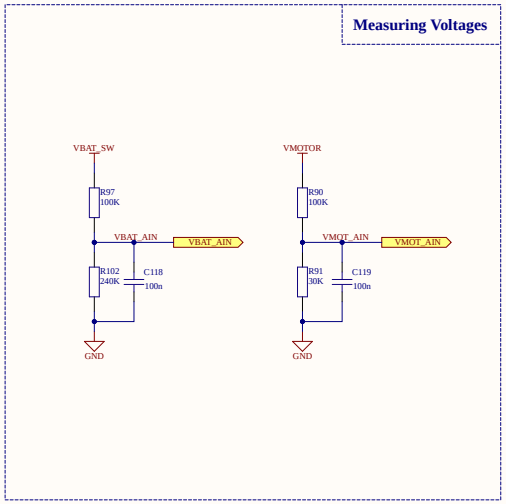

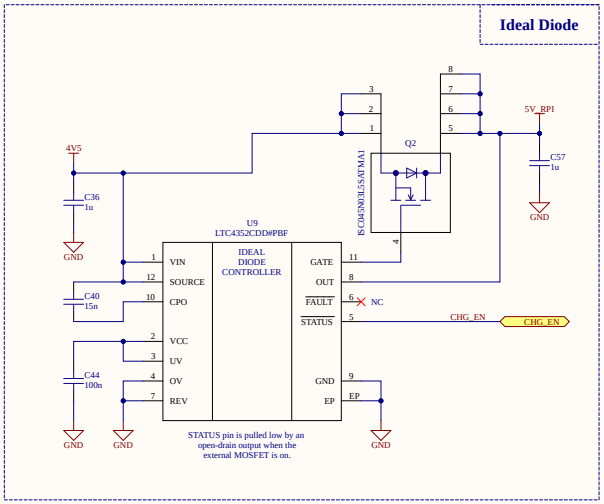

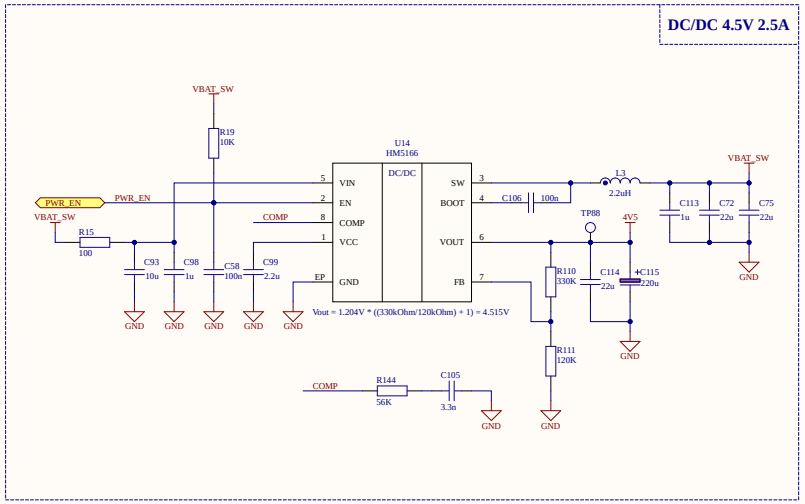

Project Name	RRRC V3		
Title	Power	Revision	2.2.0
Size A2	Author Aleksandr Dudko	Reviewed NO	Approved YES
Date: 11.06.2024		Sheet 2	of 8

SOFTEQ
SOFTEQ DEVELOPMENT CORP
1115 Dairy Ashford Suite 125
Houston TX 77069
Tel: 281.552.5000
www.softeq.com

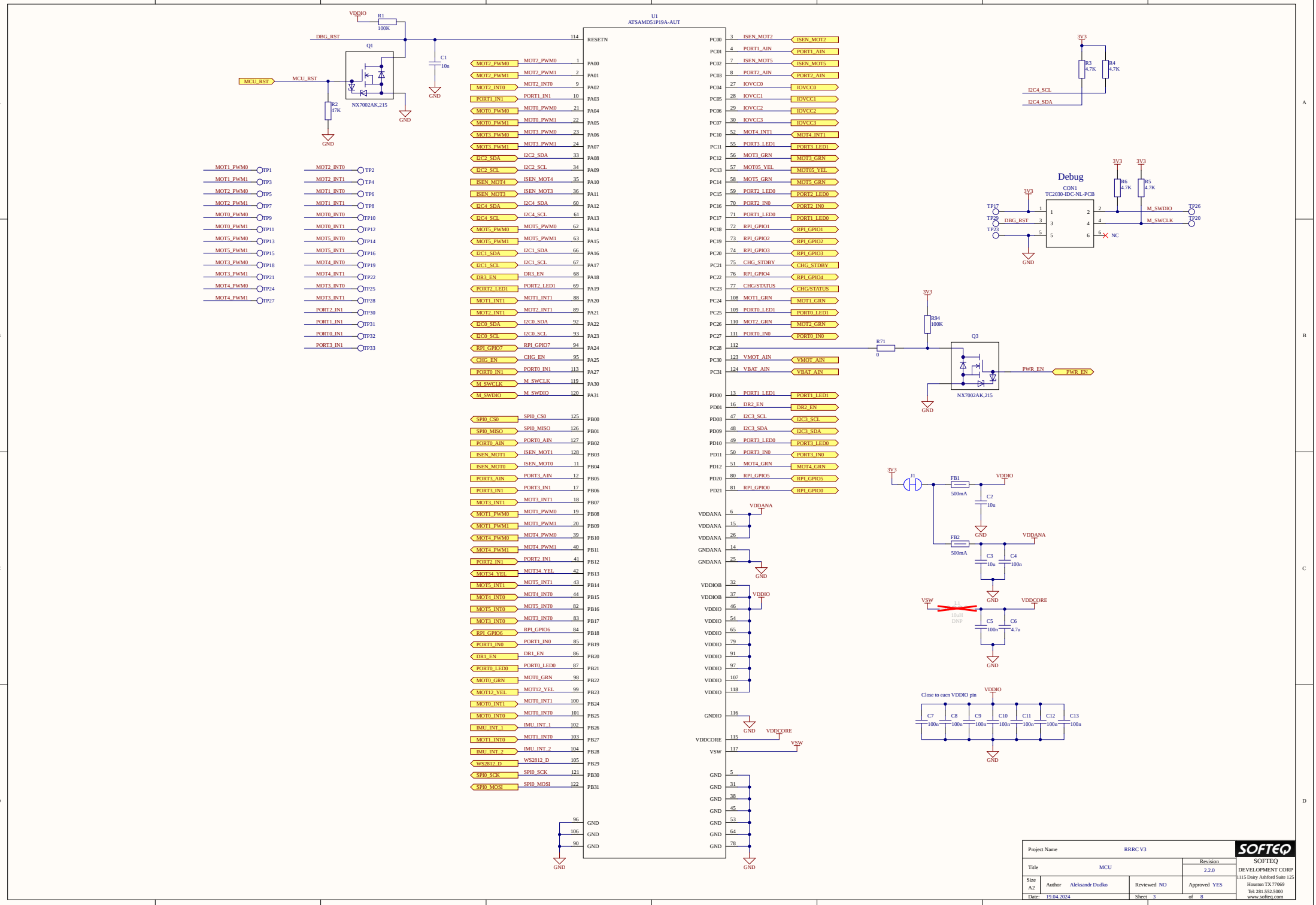

Project Name	RRRC V3		
Title	MCU	Revision	2.2.0
Size A2	Author Aleksandr Dudko	Reviewed NO	Approved YES
Date: 19.04.2024		Sheet 3	of 8

SOFTEQ
SOFTEQ DEVELOPMENT CORP
1115 Dairy Ashford Suite 125
Houston TX 77069
Tel: 281.552.5000
www.softeq.com

Port array for sensors

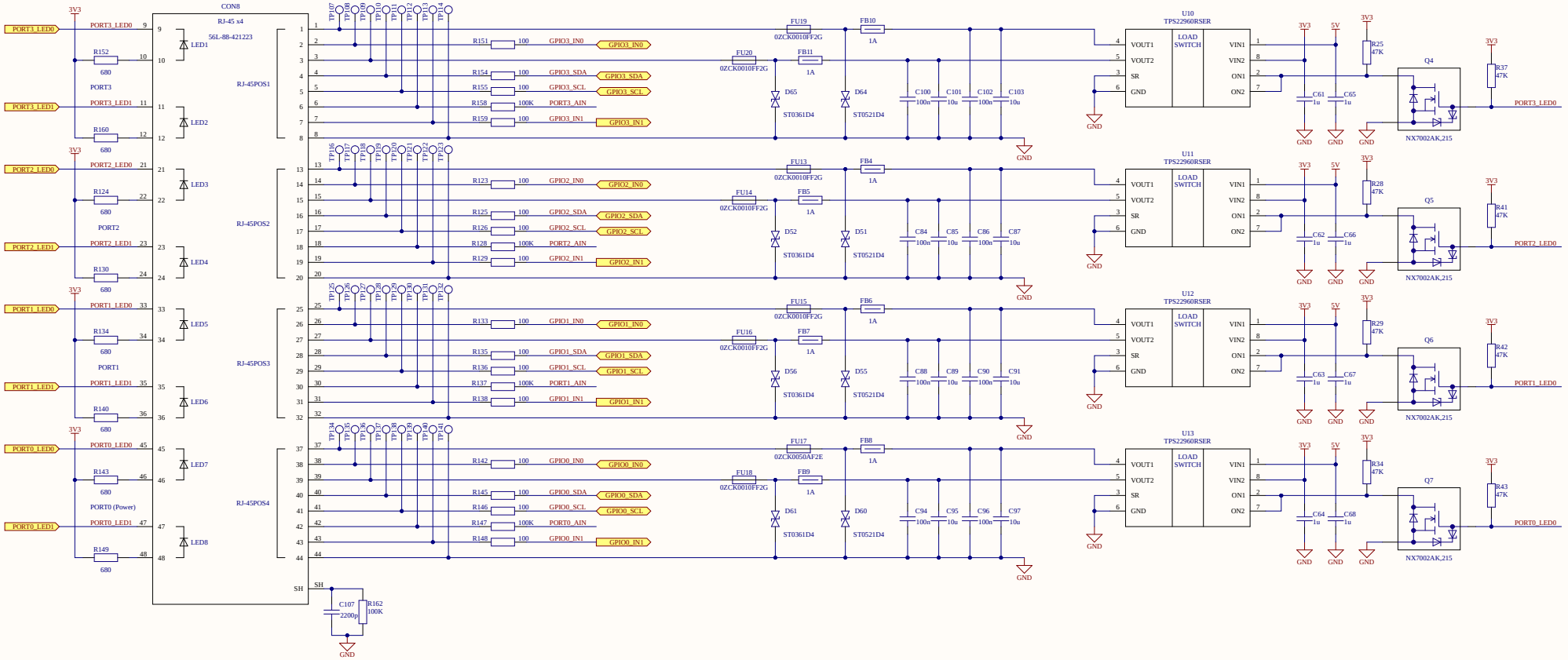

Project Name	RRRC V3		SOFTEQ
Title	Sensor Ports	Revision 2.2.0	SOFTEQ DEVELOPMENT CORP 1115 Dairy Ashford Suite 125 Houston TX 77069 Tel: 281.552.5000 www.softeq.com
Size A2	Author Aleksandr Dudko	Reviewed NO	Approved YES
Date: 19.04.2024		Sheet 4 of 8	

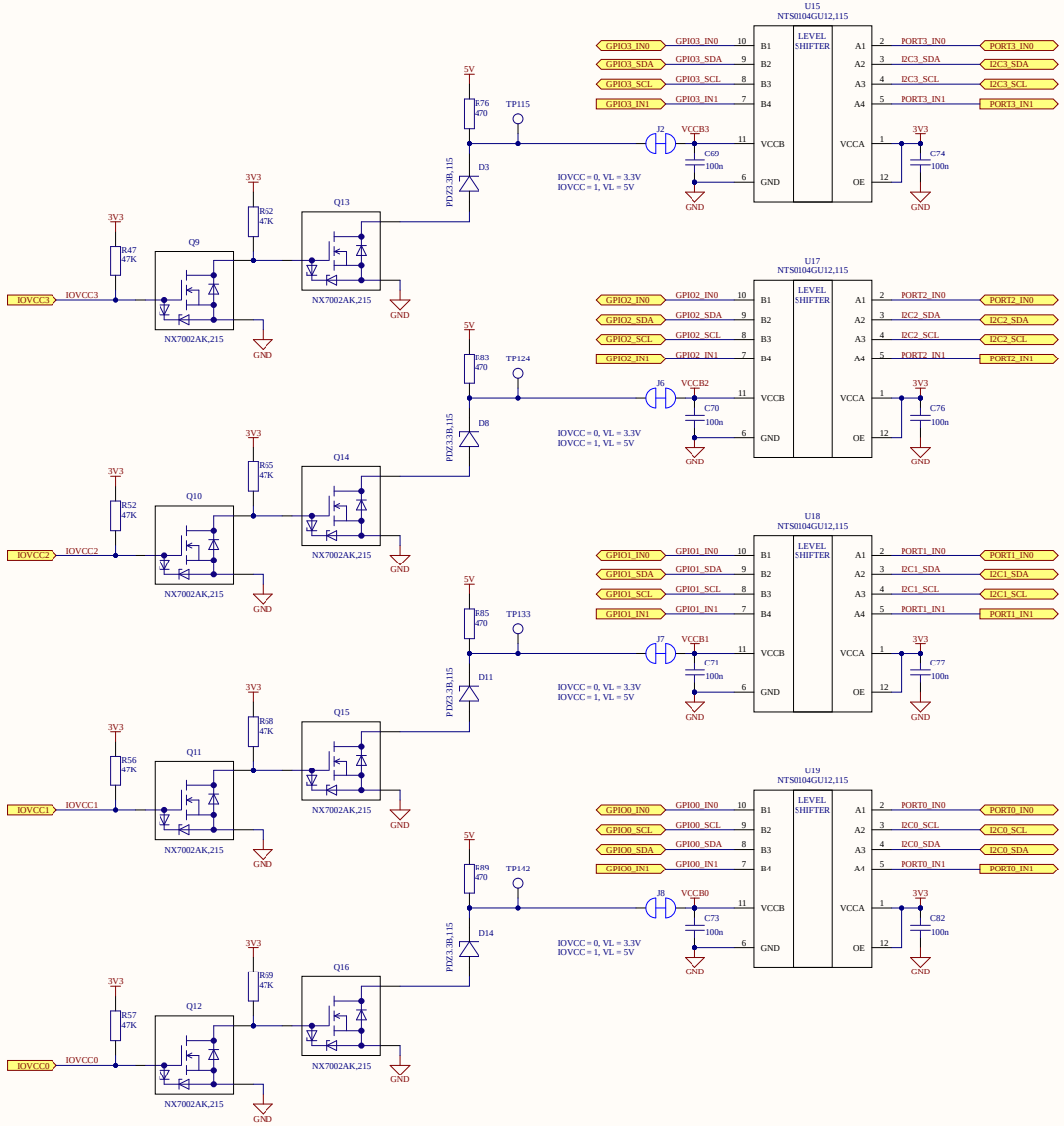

Project Name	RRRC V3		
Title	Level Shifters	Revision	2.2.0
Size A2	Author Aleksandr Dudko	Reviewed NO	Approved YES
Date: 19.04.2024		Sheet 5	of 8

SOFTEQ
SOFTEQ
DEVELOPMENT CORP
1115 Dairy Ashford Suite 125
Houston TX 77069
Tel: 281.552.5000
www.softeq.com

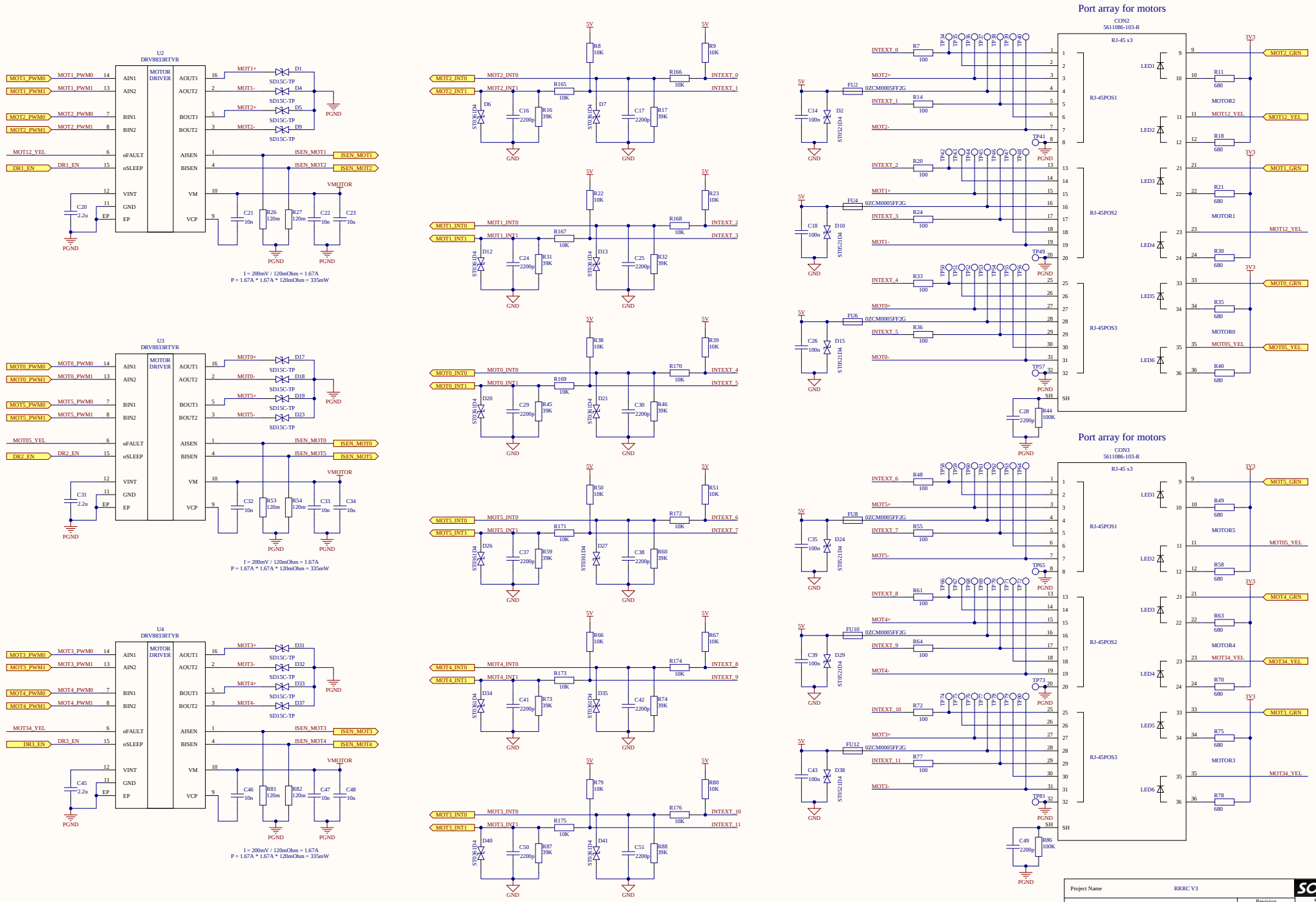
Port array for motors
CON2
5611086-103-R
RJ-45 x3
RJ-45POS1
RJ-45POS2
RJ-45POS3
MOTOR2
MOTOR1
MOTOR0
U2
DRV8833RTYR
MOTOR DRIVER
AIN1
AIN2
BIN1
BIN2
nFAULT
nSLEEP
VINT
GND
EP
AOUT1
AOUT2
BOUT1
BOUT2
AISEN
BISEN
VM
VCP
MOT1_PWM0
MOT1_PWM1
MOT2_PWM0
MOT2_PWM1
MOT12_YEL
DR1_EN
ISEN_MOT1
ISEN_MOT2
VMOTOR
PGND
I = 200mV / 120mOhm = 1.67A
P = 1.67A * 1.67A * 120mOhm = 335mW
U3
DRV8833RTYR
MOT0_PWM0
MOT0_PWM1
MOT5_PWM0
MOT5_PWM1
MOT05_YEL
DR2_EN
ISEN_MOT0
ISEN_MOT5
I = 200mV / 120mOhm = 1.67A
P = 1.67A * 1.67A * 120mOhm = 335mW
U4
DRV8833RTYR
MOT3_PWM0
MOT3_PWM1
MOT4_PWM0
MOT4_PWM1
MOT34_YEL
DR3_EN
ISEN_MOT3
ISEN_MOT4
I = 200mV / 120mOhm = 1.67A
P = 1.67A * 1.67A * 120mOhm = 335mW
5V
GND
INTEXT_0
INTEXT_1
INTEXT_2
INTEXT_3
INTEXT_4
INTEXT_5
INTEXT_6
INTEXT_7
INTEXT_8
INTEXT_9
INTEXT_10
INTEXT_11
Port array for motors
CON3
5611086-103-R
RJ-45 x3
3V3
MOT2_GRN
MOT12_YEL
MOT1_GRN
MOT12_YEL
MOT0_GRN
MOT05_YEL
MOT5_GRN
MOT05_YEL
MOT4_GRN
MOT34_YEL
MOT3_GRN
MOT34_YEL
Project Name
RRRC V3
Title
Motor Ports
Revision
2.2.0
Size
A2
Author
Aleksandr Dudko
Reviewed NO
Approved YES
Date: 19.04.2024
Sheet 6 of 8
SOFTEQ
SOFTEQ
DEVELOPMENT CORP
1115 Dairy Ashford Suite 125
Houston TX 77069
Tel: 281.552.5000
www.softeq.com

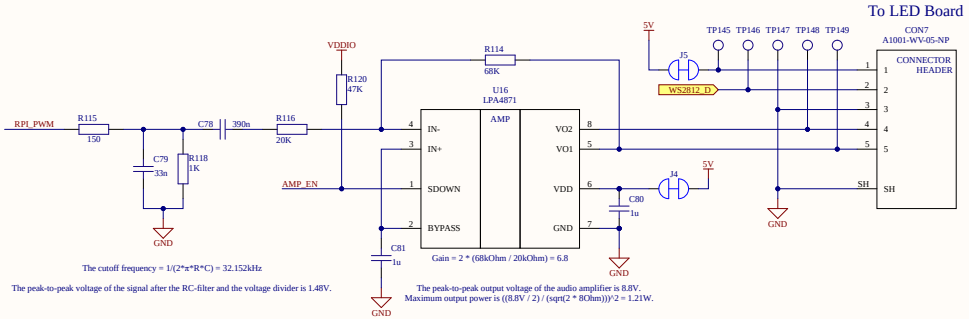

The cutoff frequency = 1/(2*π*R*C) = 32.152kHz

The peak-to-peak voltage of the signal after the RC-filter and the voltage divider is 1.48V.

Gain = 2 * (68kOhm / 20kOhm) = 6.8

The peak-to-peak output voltage of the audio amplifier is 8.8V.
Maximum output power is ((8.8V / 2) / (sqrt(2 * 8Ohm)))^2 = 1.21W.

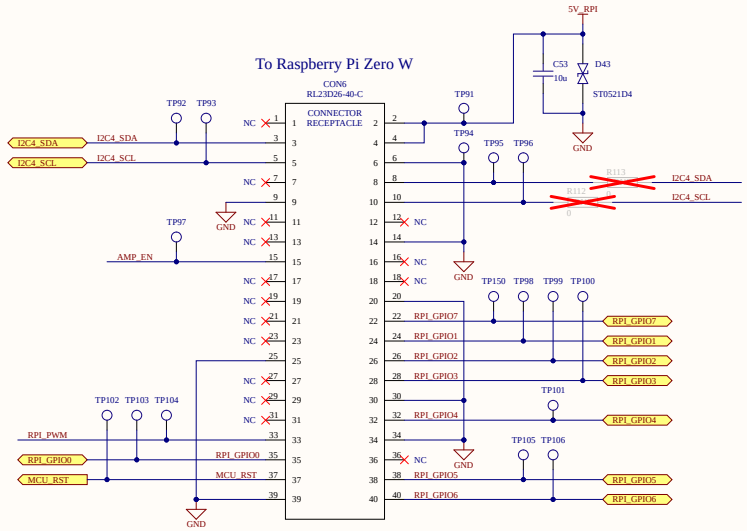

Project Name	RRRC V3		
Title	RPi Connector	Revision	2.2.0
Size A2	Author Aleksandr Dudko	Reviewed NO	Approved YES
Date: 19.04.2024		Sheet 7	of 8

SOFTEQ
SOFTEQ
DEVELOPMENT CORP
1115 Dairy Ashford Suite 125
Houston TX 77069
Tel: 281.552.5000
www.softeq.com

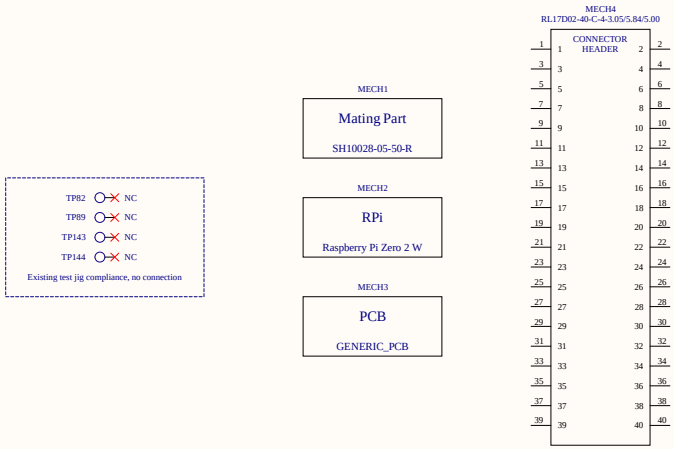

Project Name	RRRC V3		
Title	Mechanicals	Revision	2.2.0
Size A2	Author Aleksandr Dudko	Reviewed NO	Approved YES
Date: 19.04.2024		Sheet 8	of 8

SOFTEQ
SOFTEQ DEVELOPMENT CORP
1115 Dairy Ashford Suite 125
Houston TX 77069
Tel: 281.552.5000
www.softeq.com