1

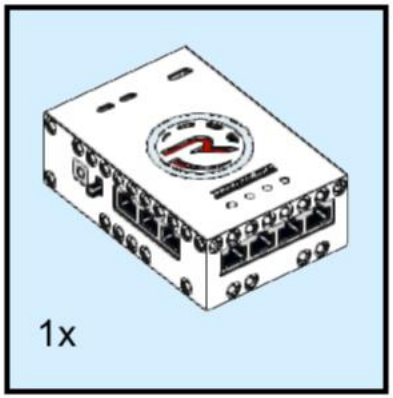

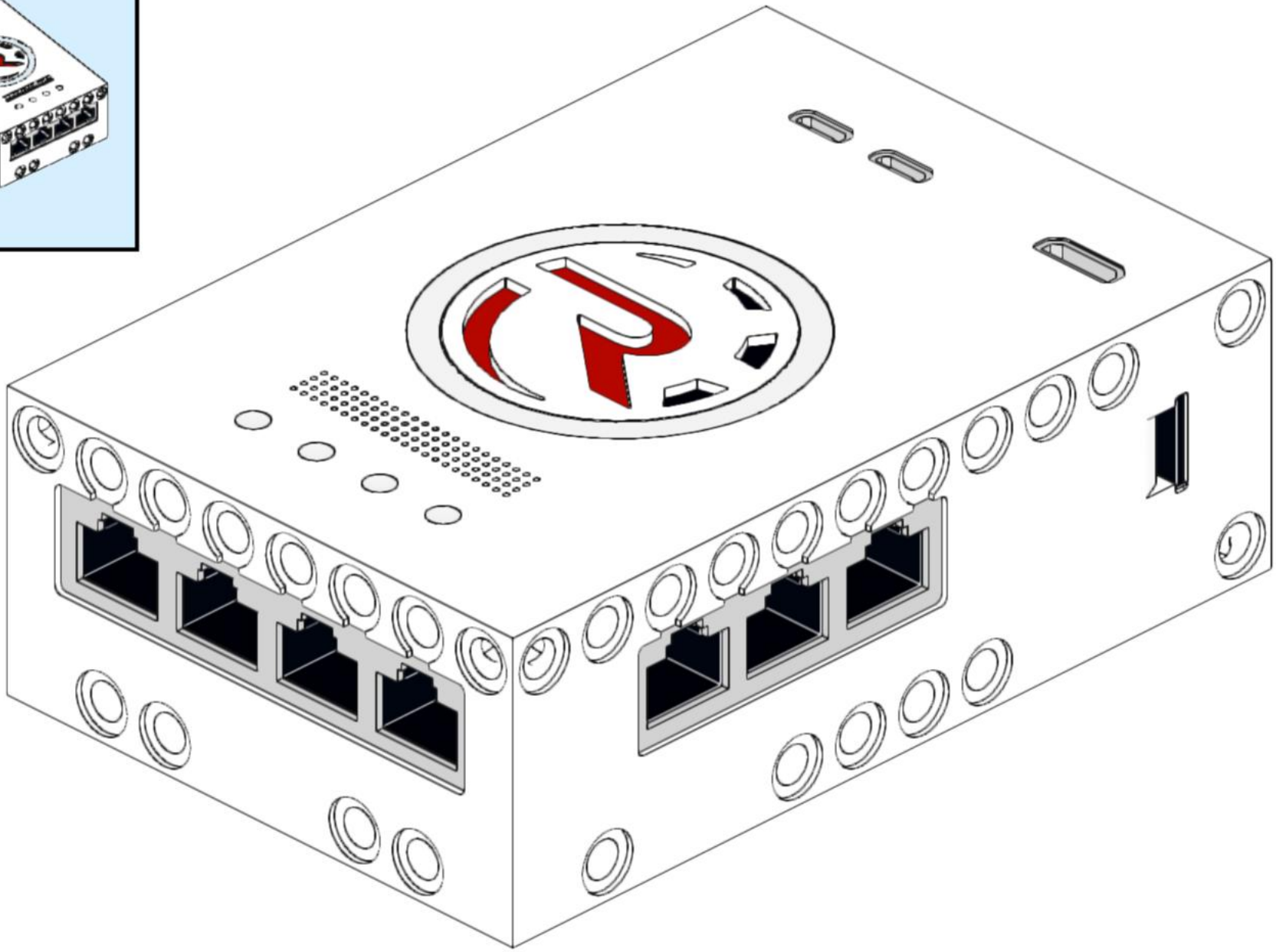

2

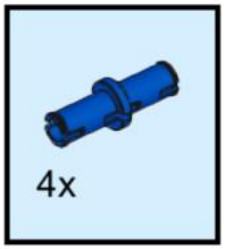

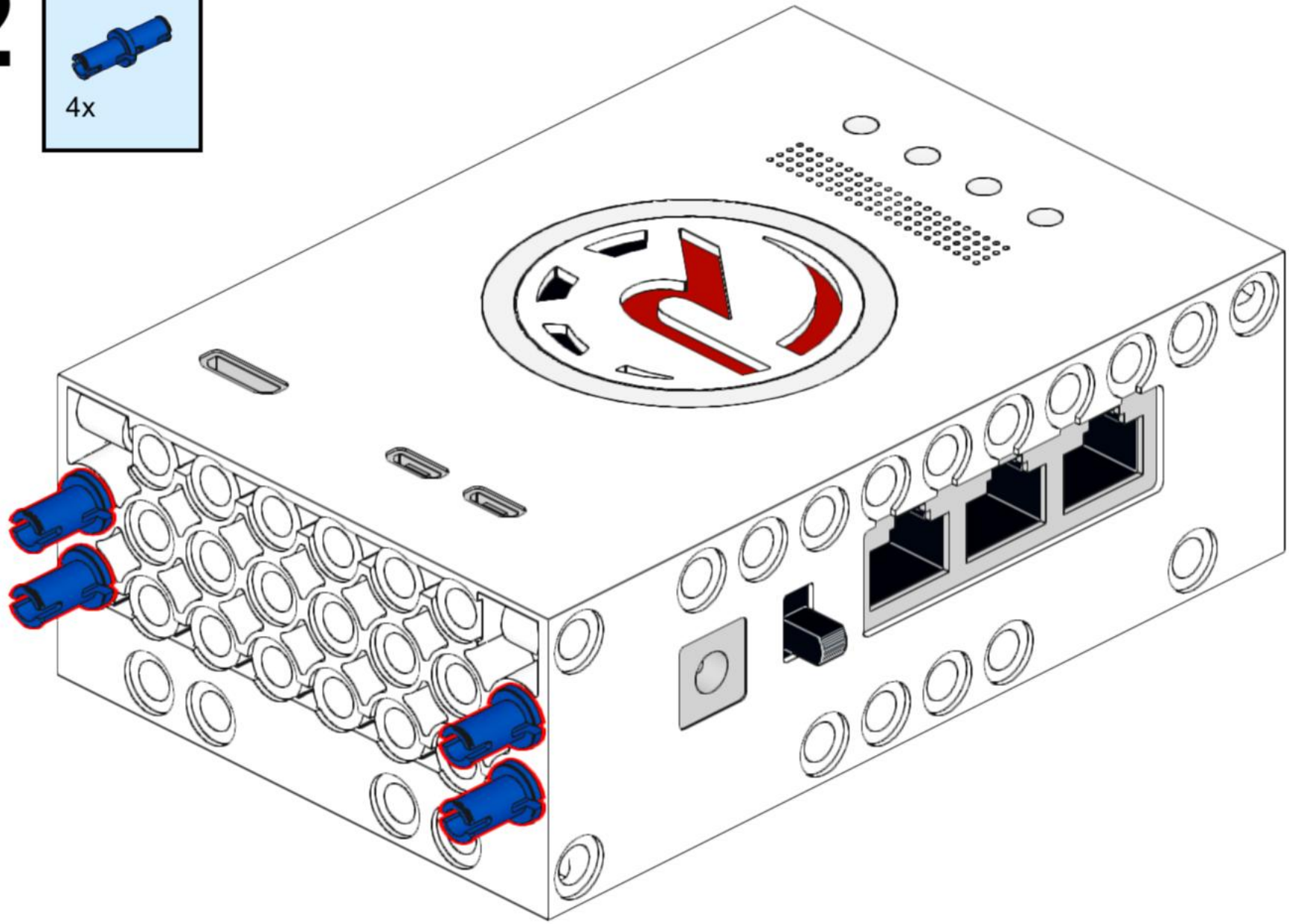

3

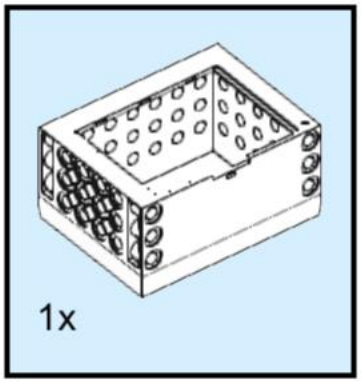

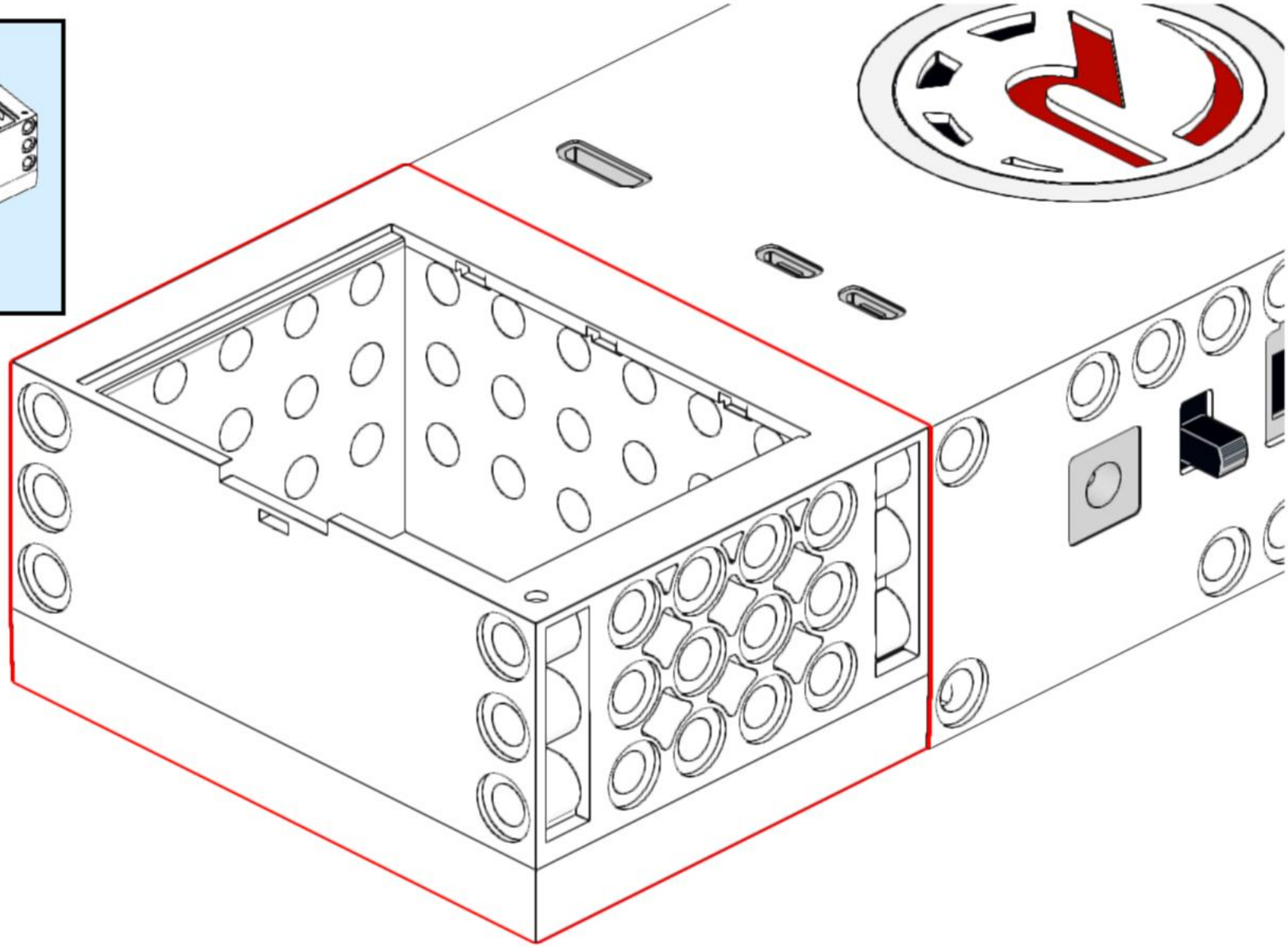

4

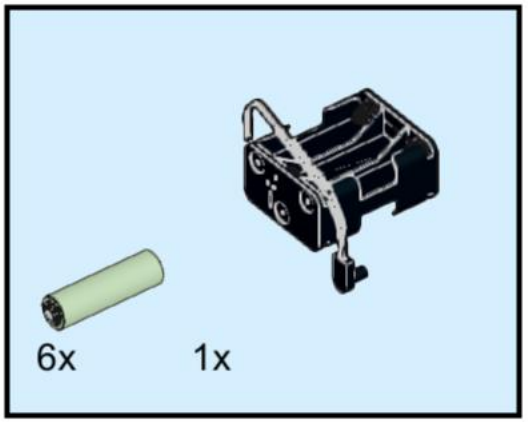

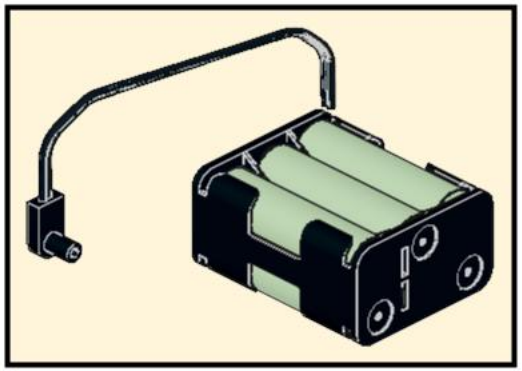

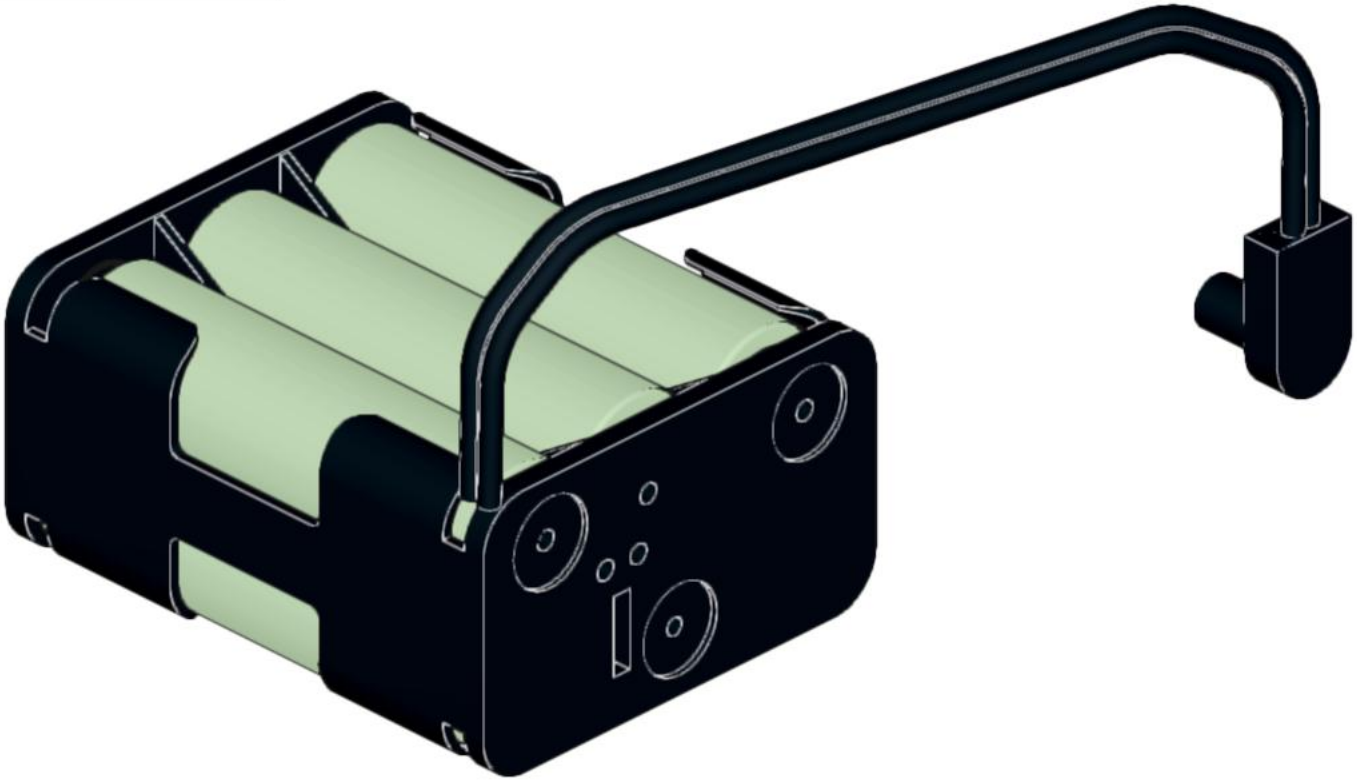

5

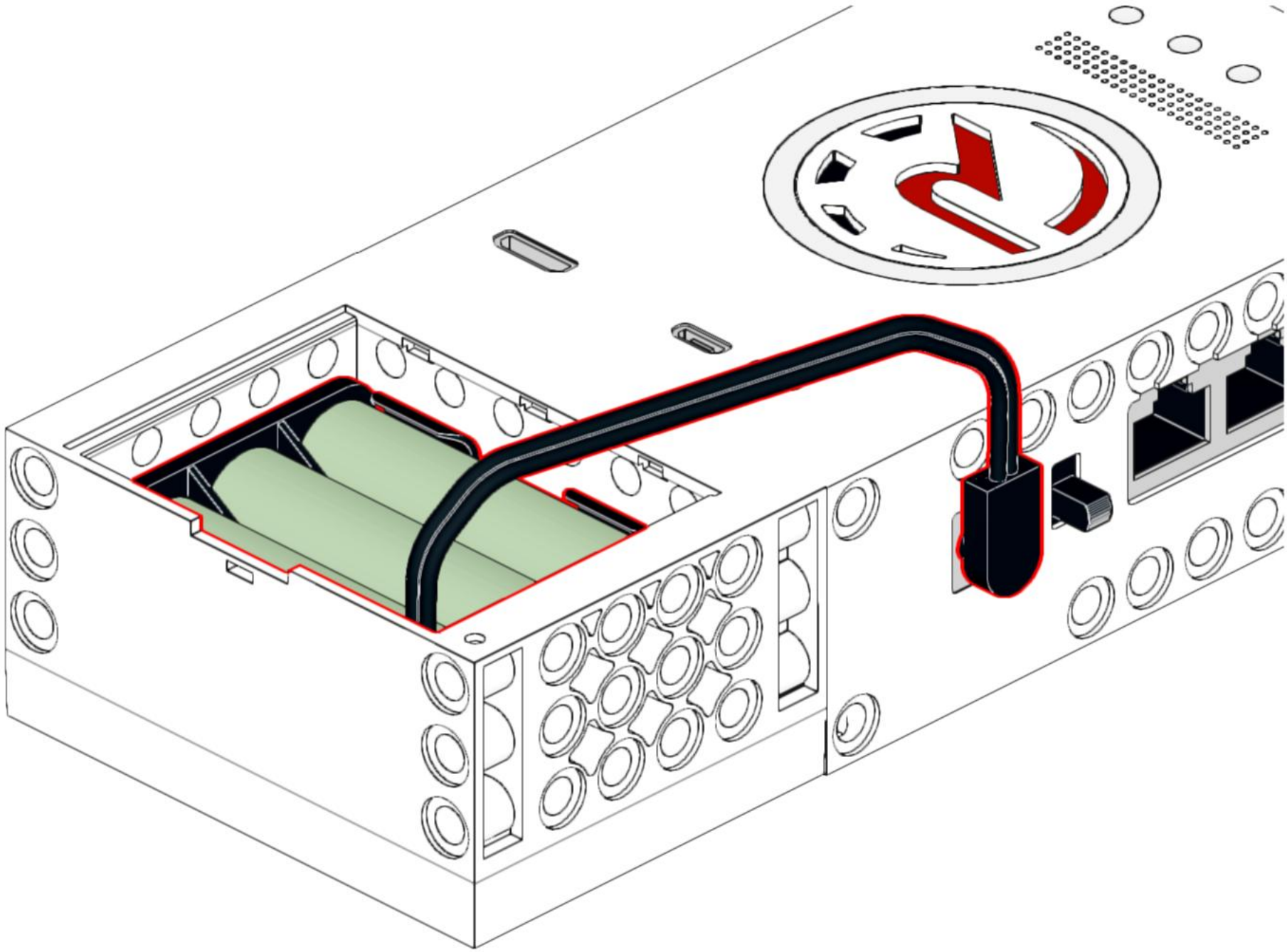

6

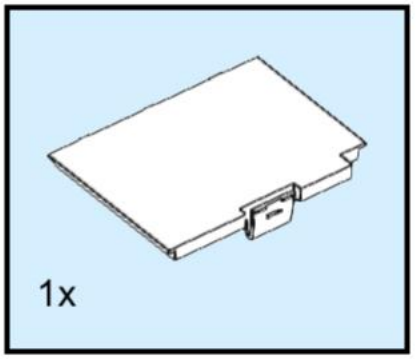

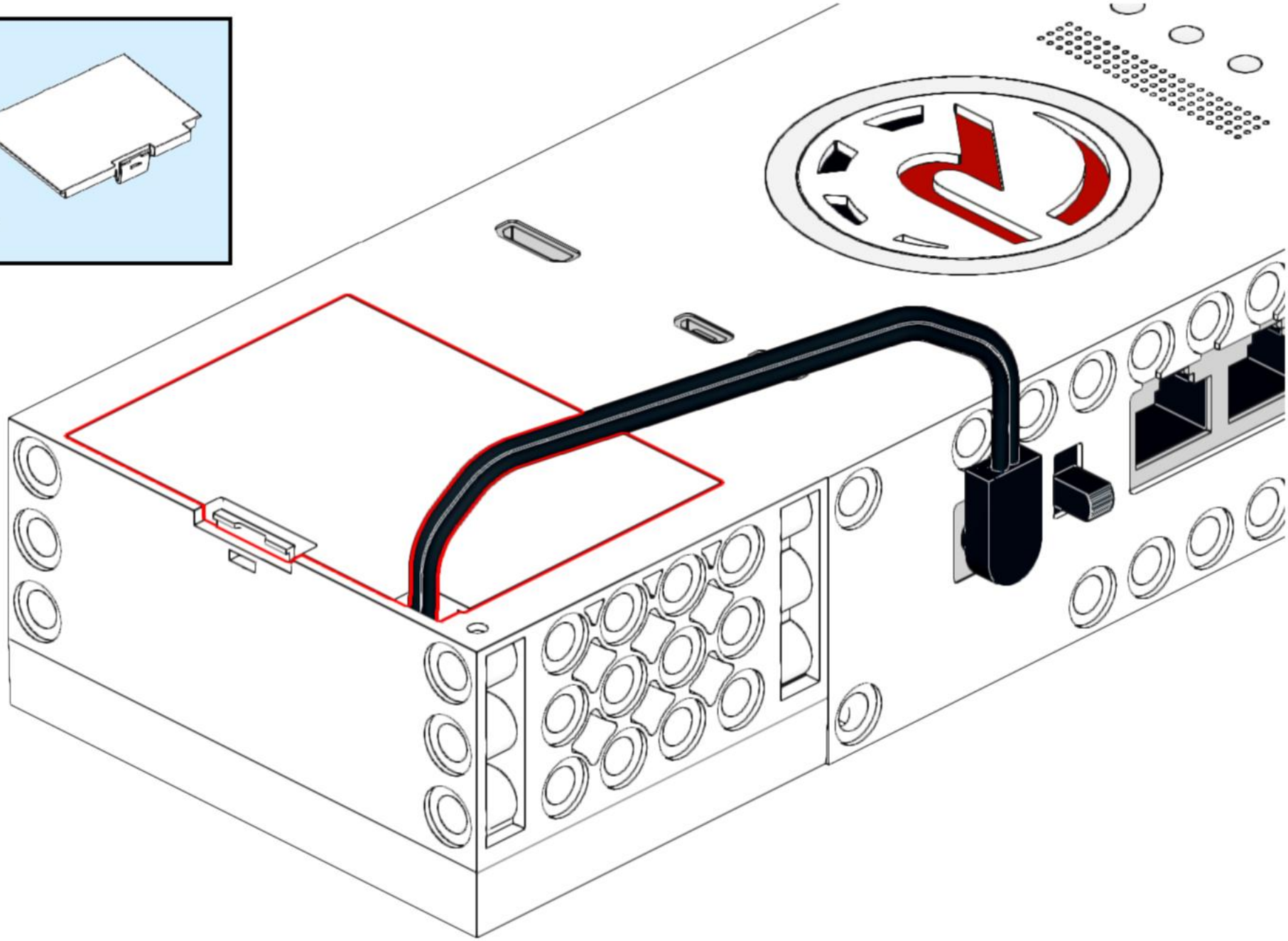

7

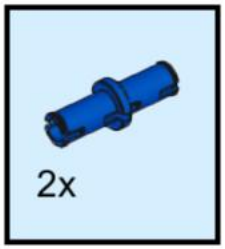

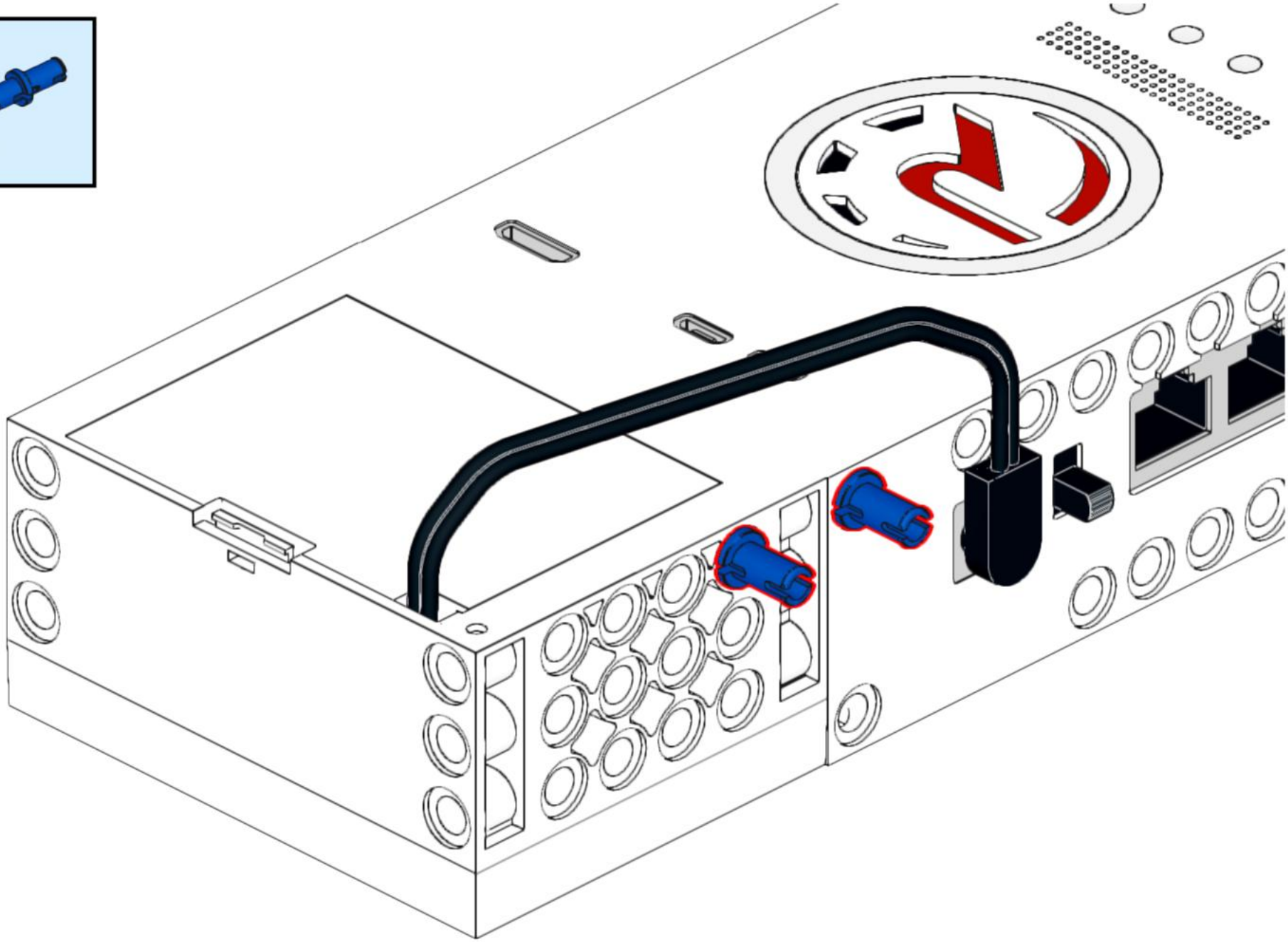

8

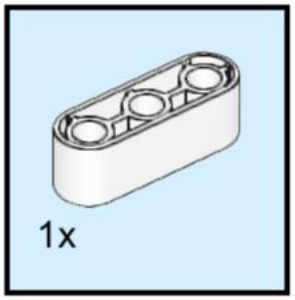

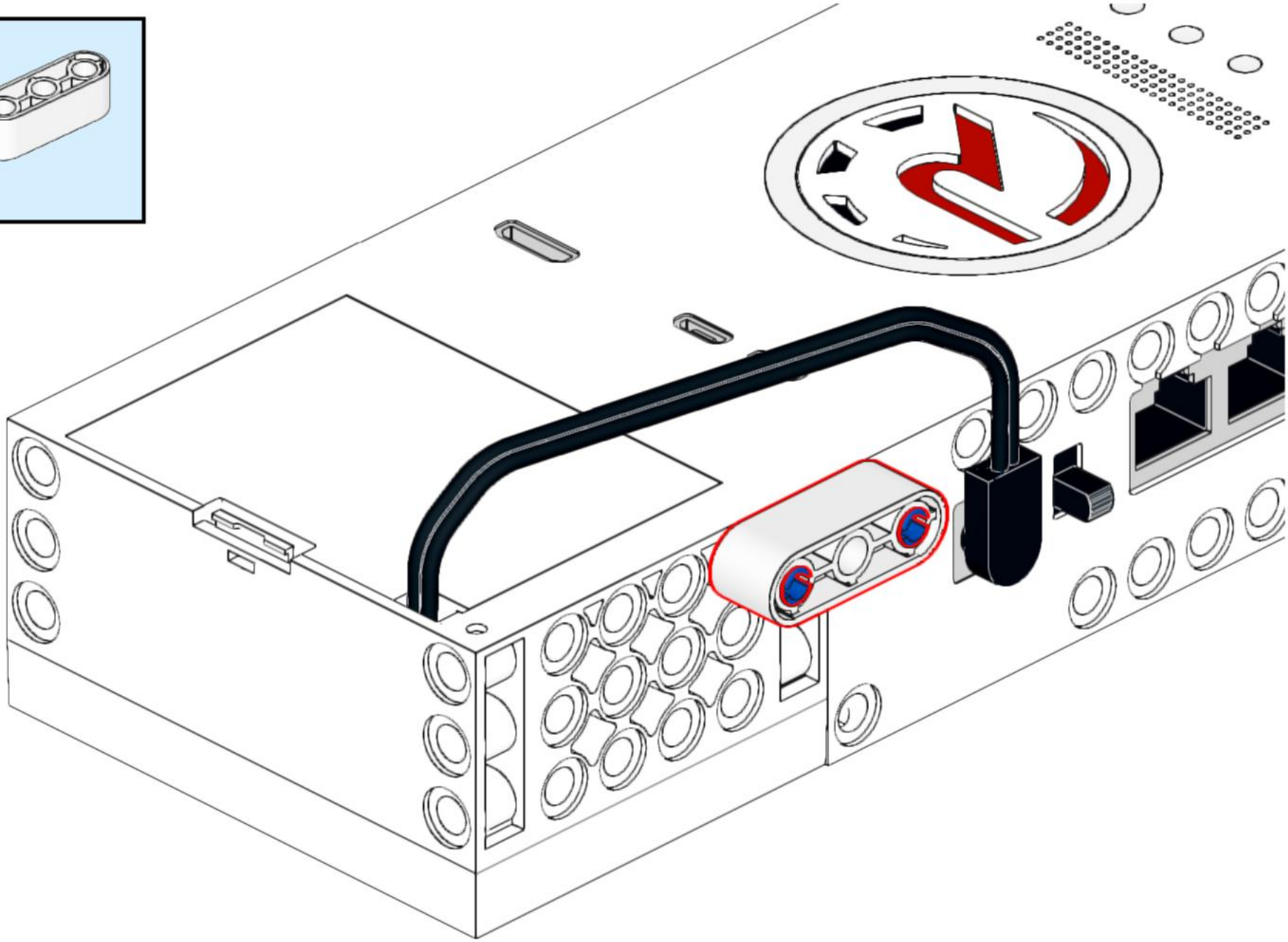

9

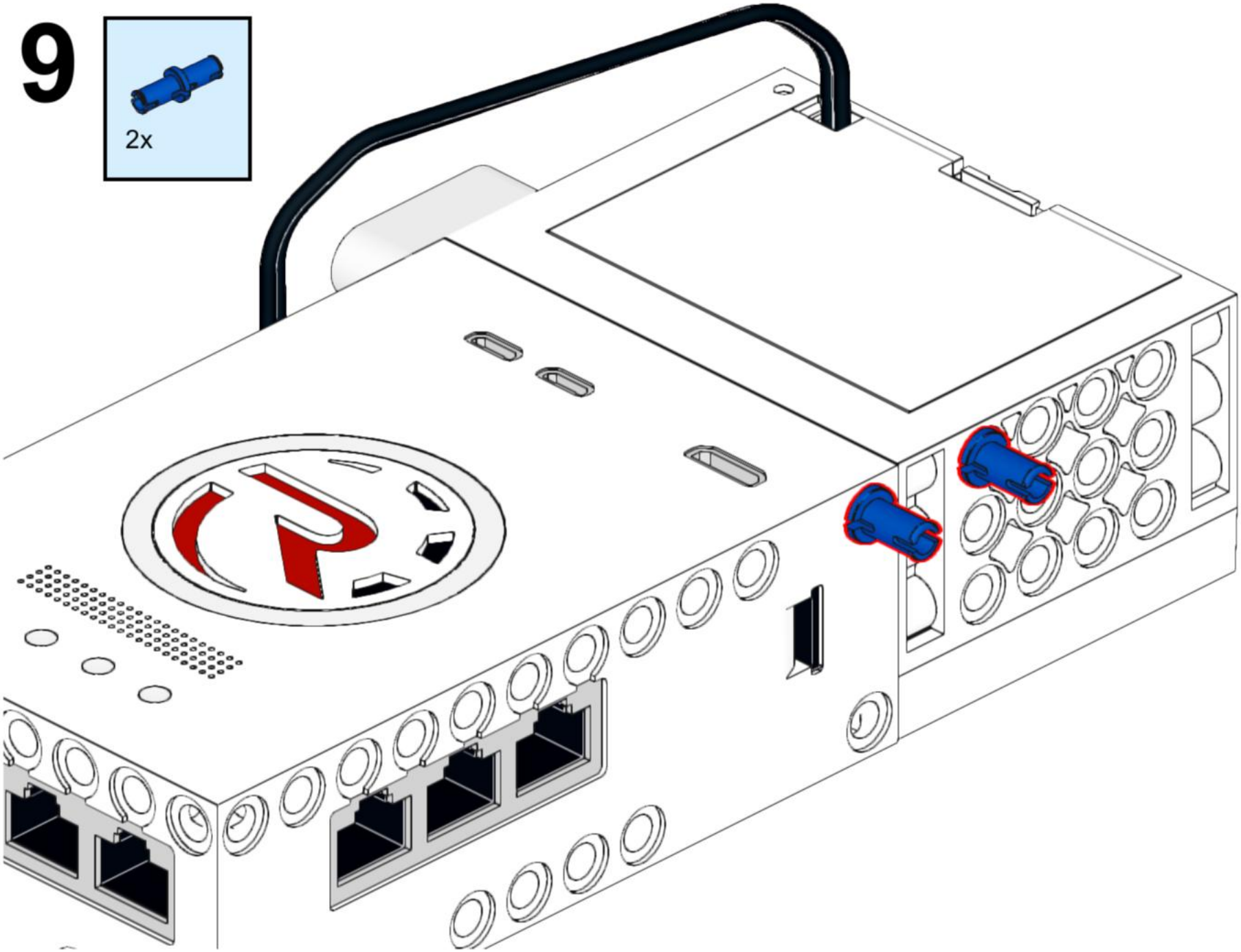

10

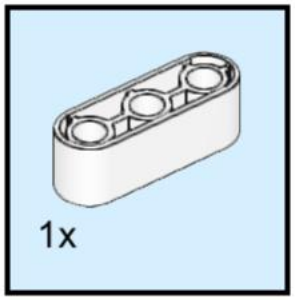

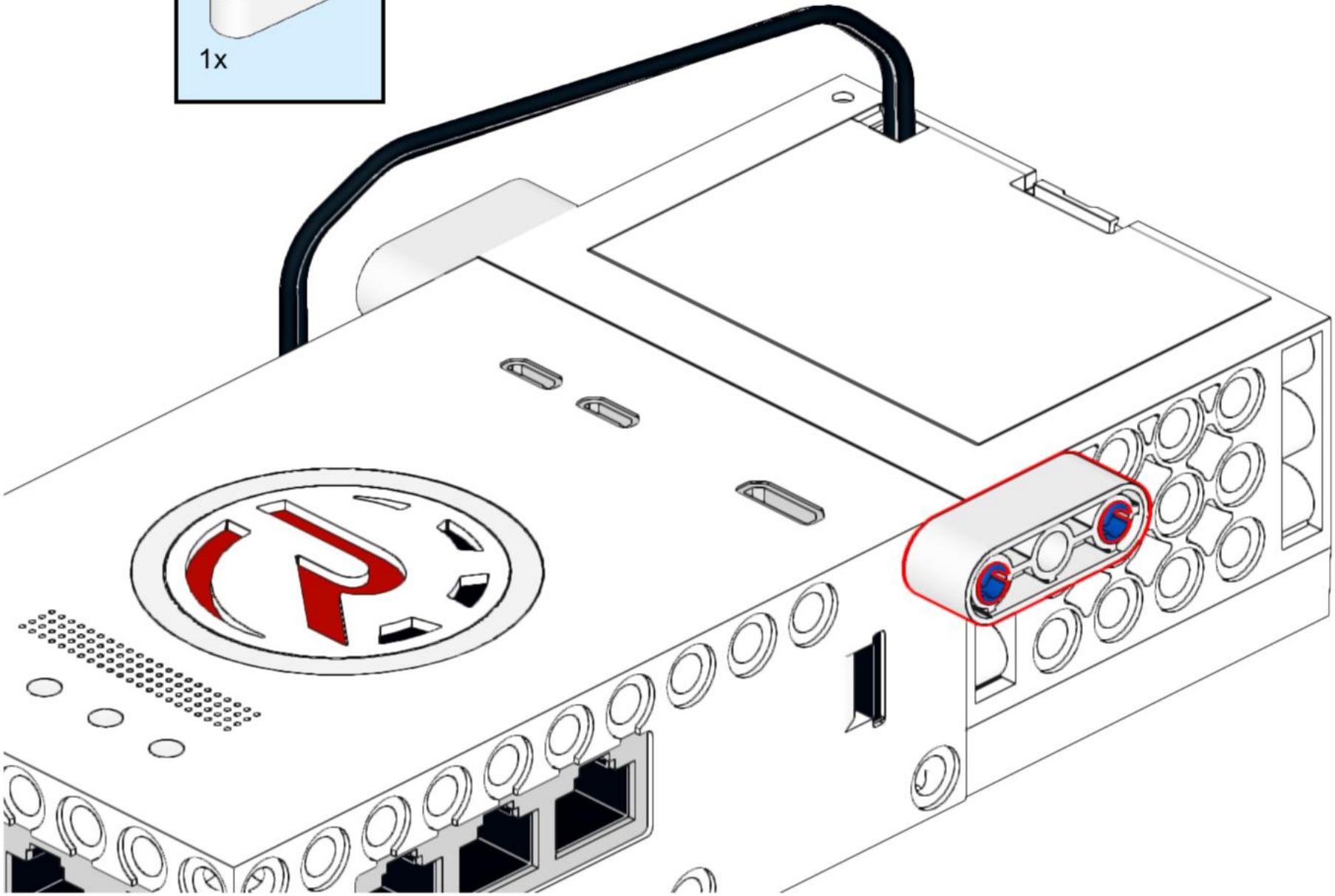

11

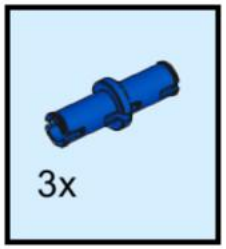

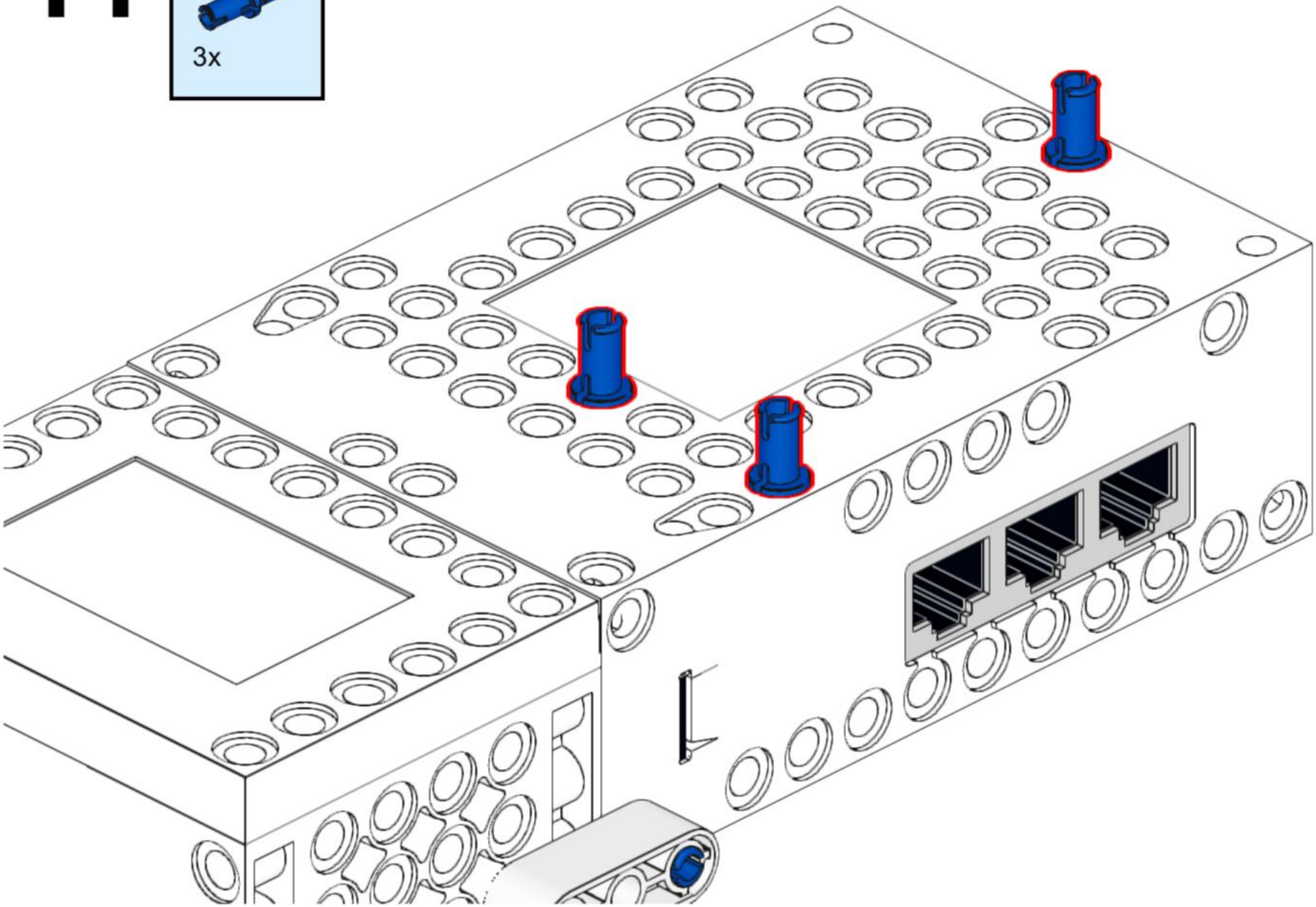

12

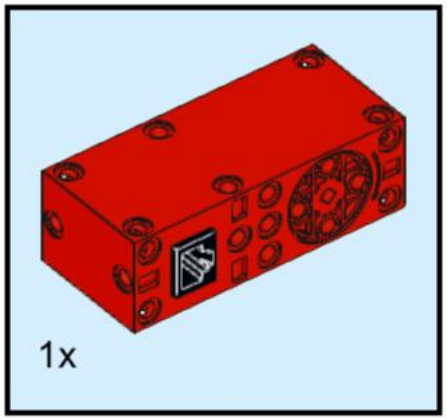

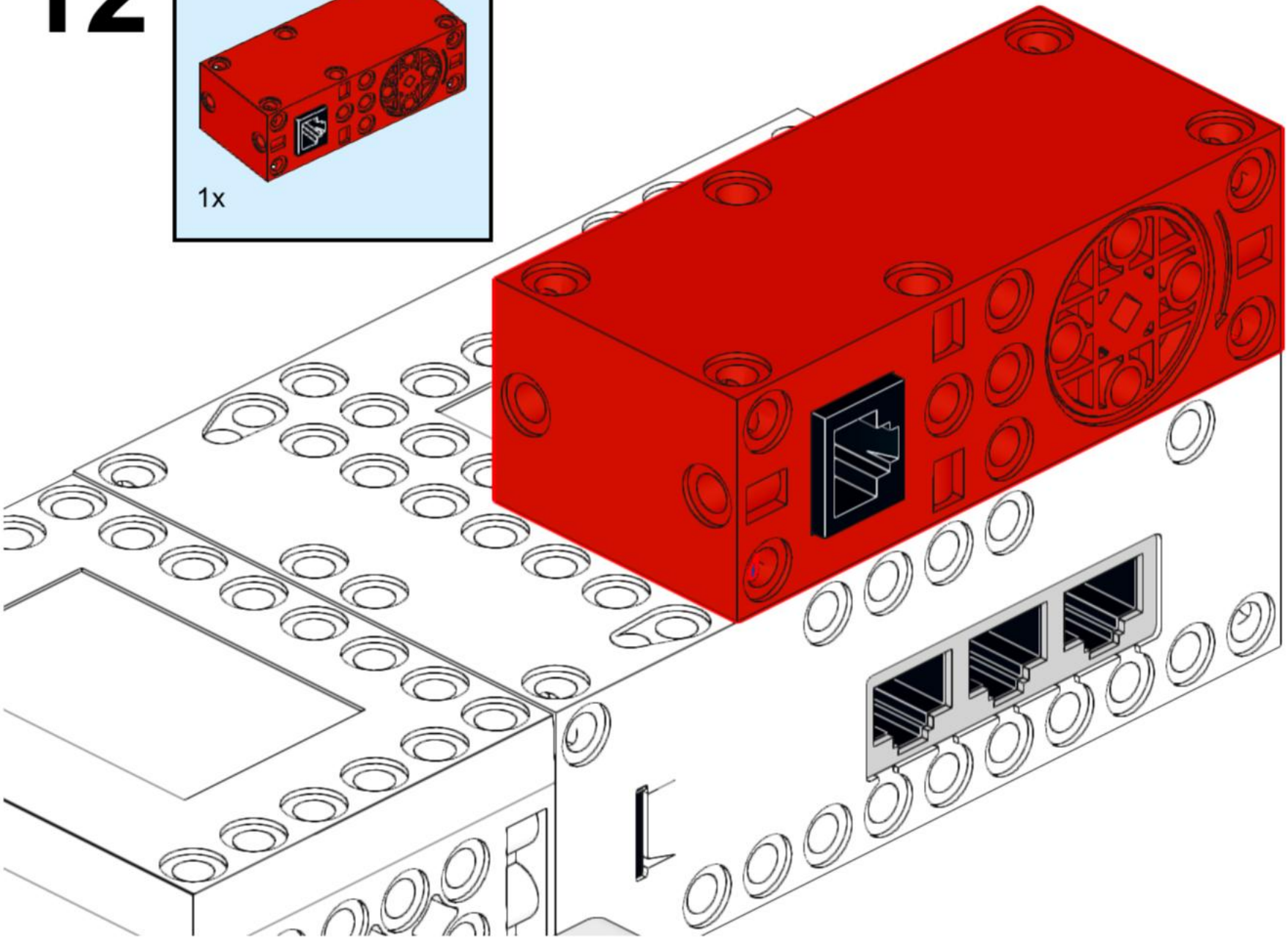

13

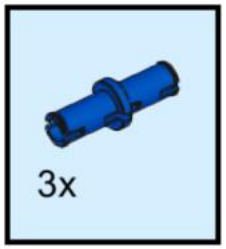

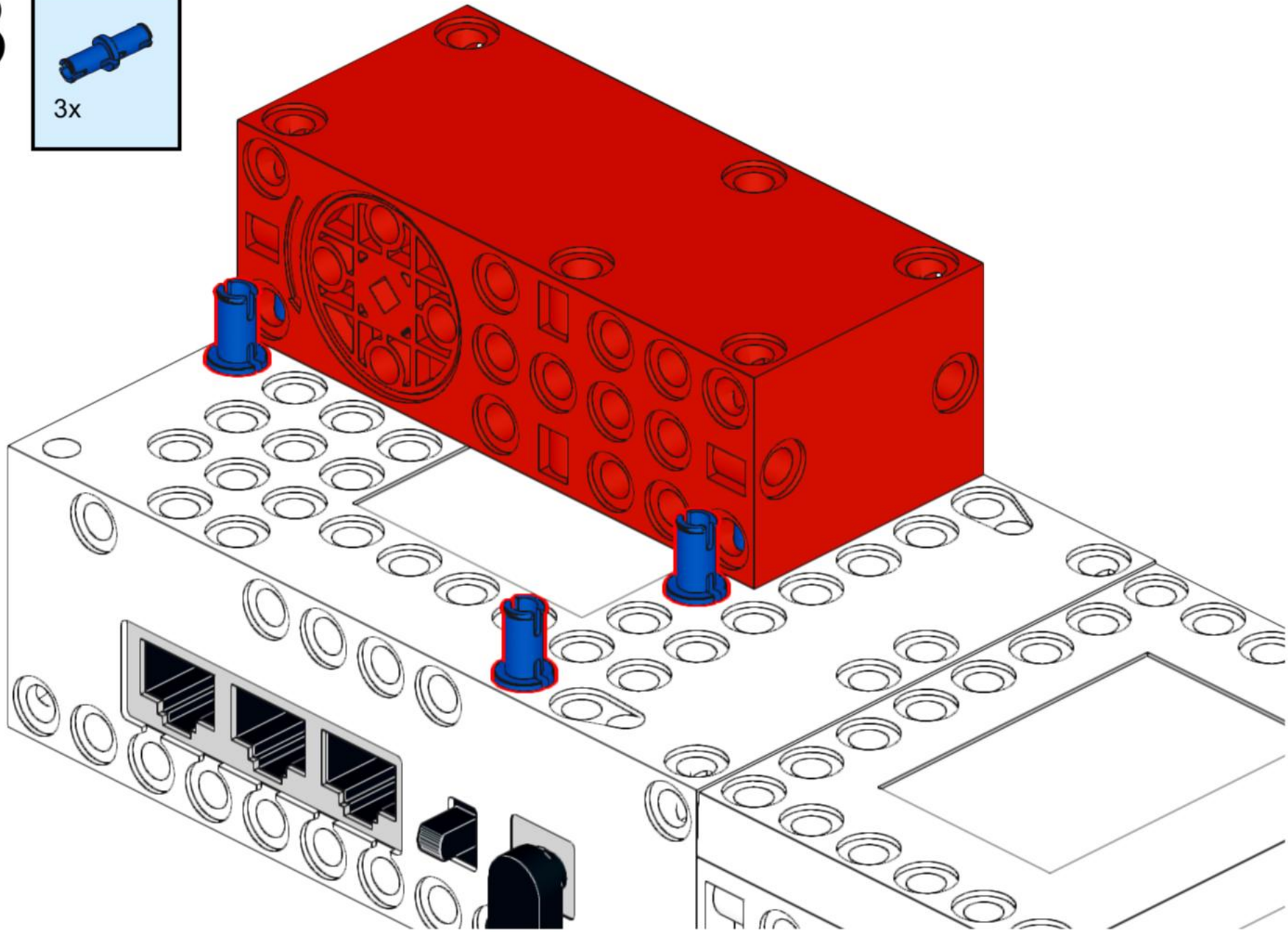

14

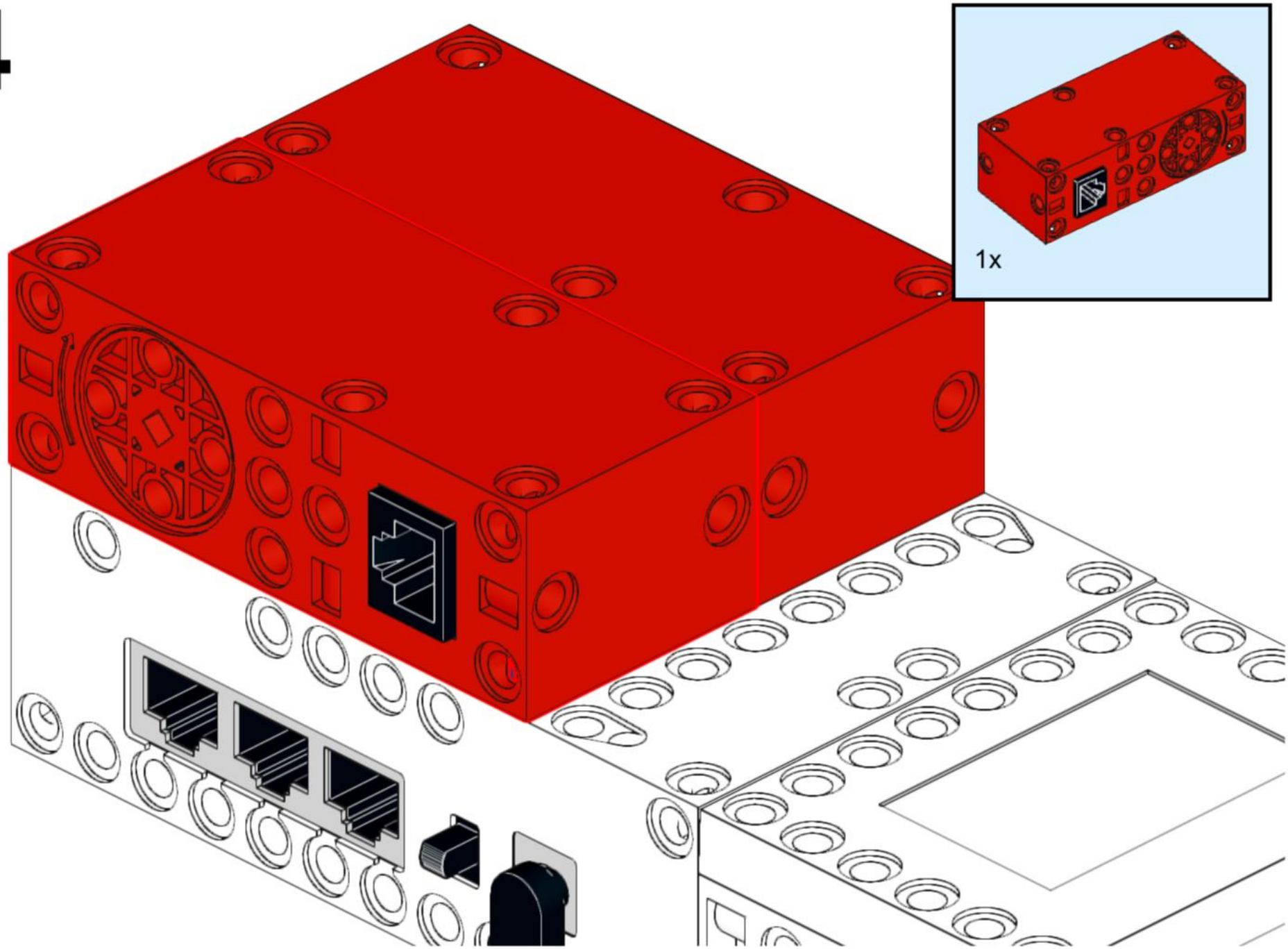

15

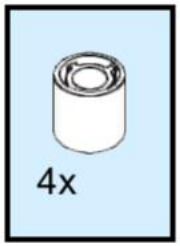

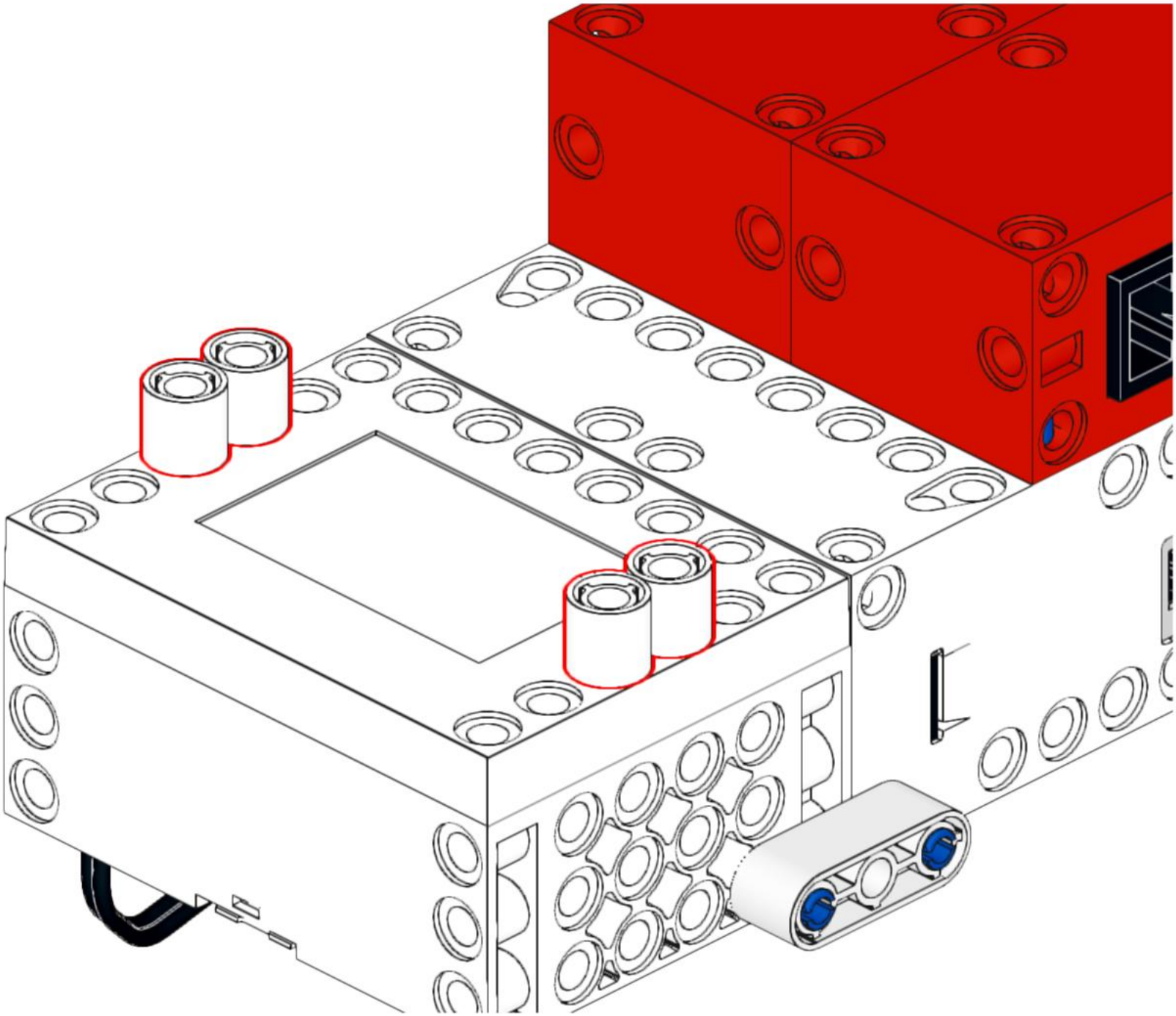

16

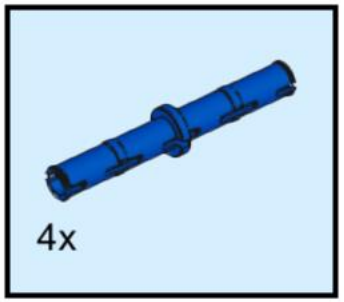

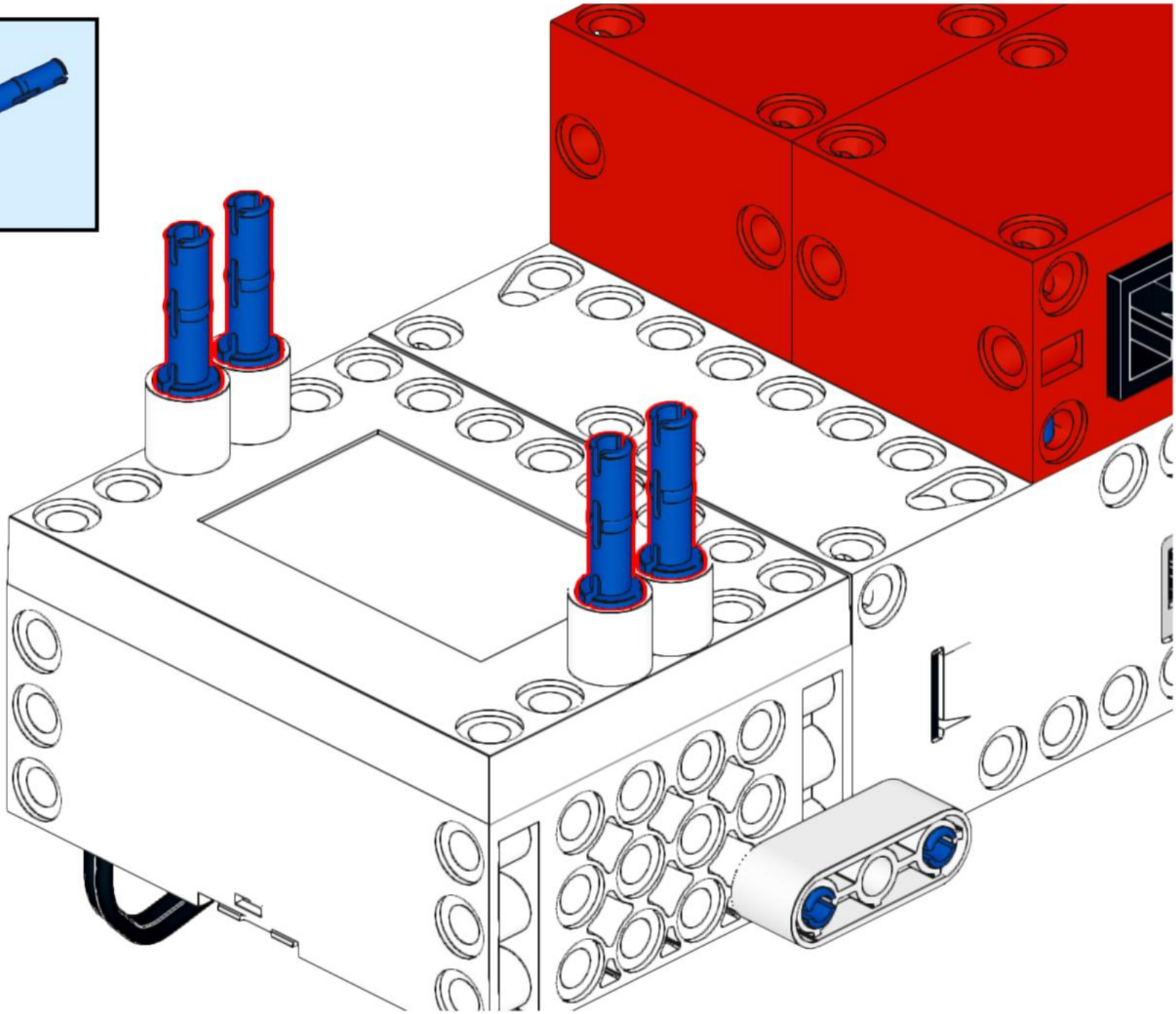

17

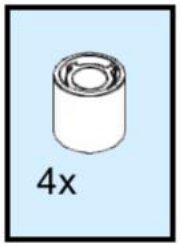

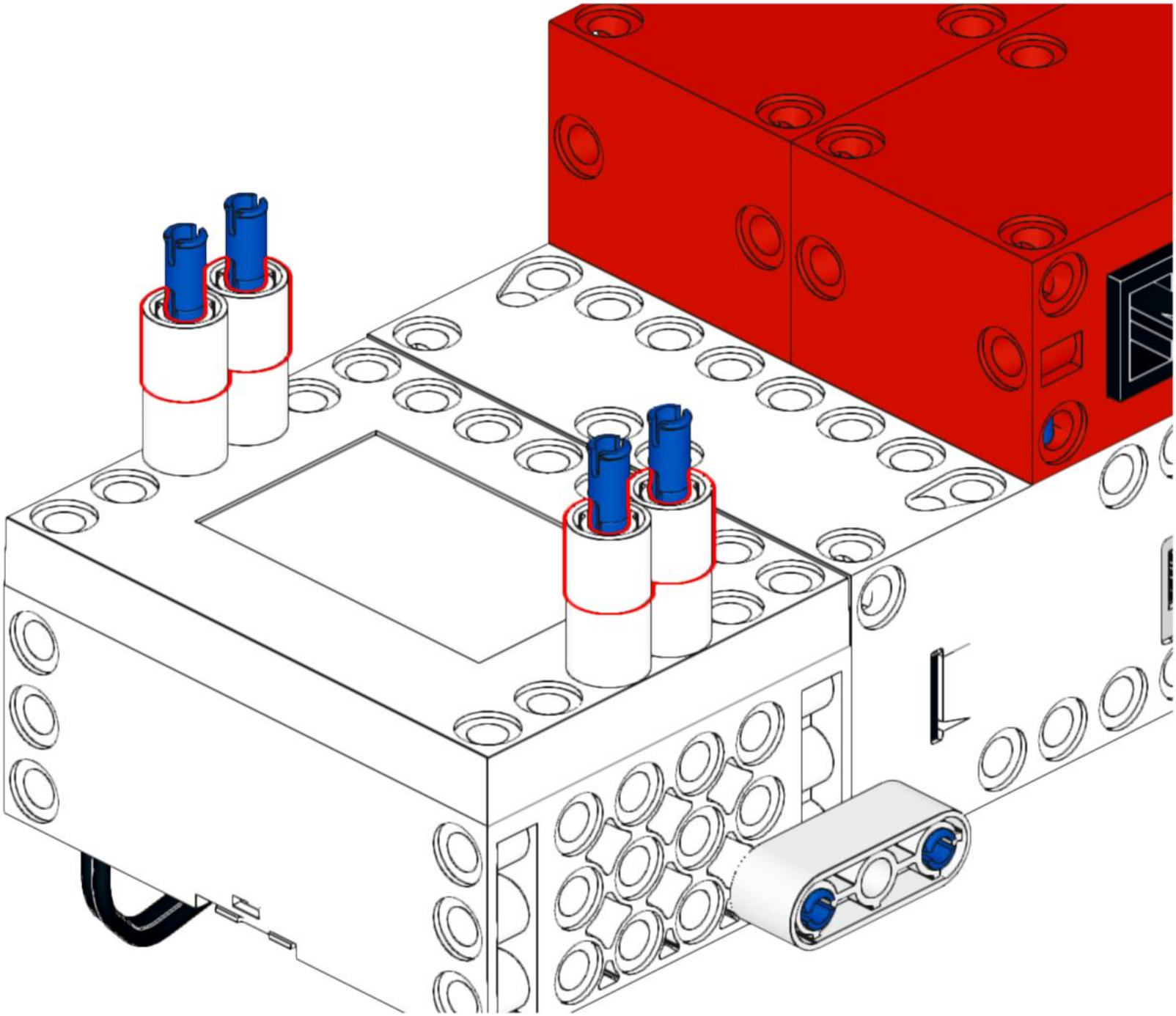

18

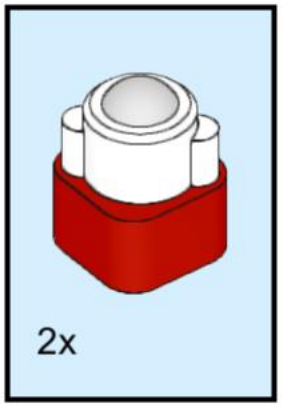

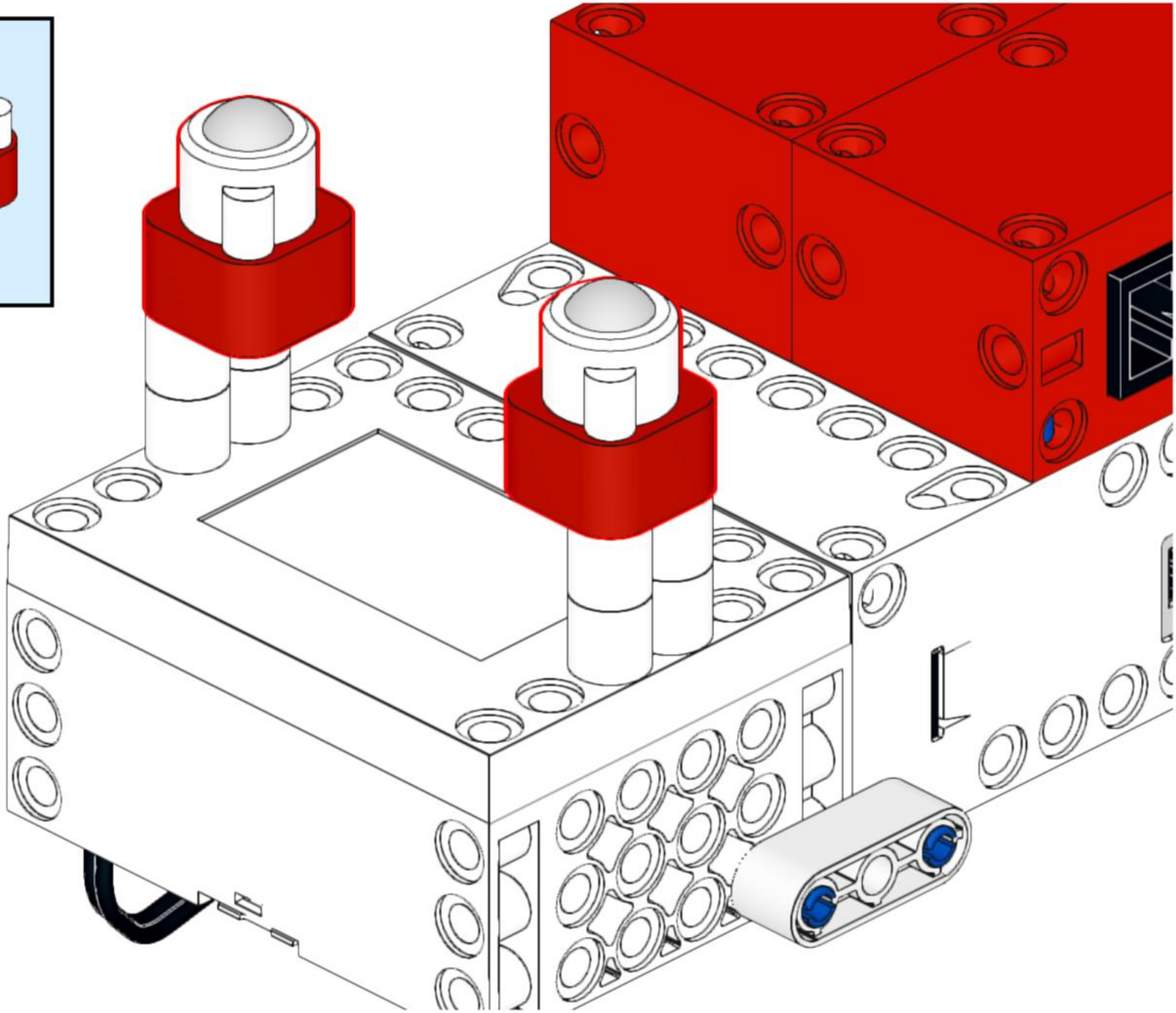

19

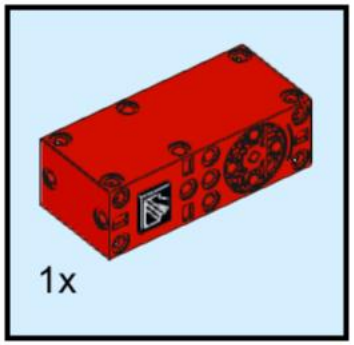

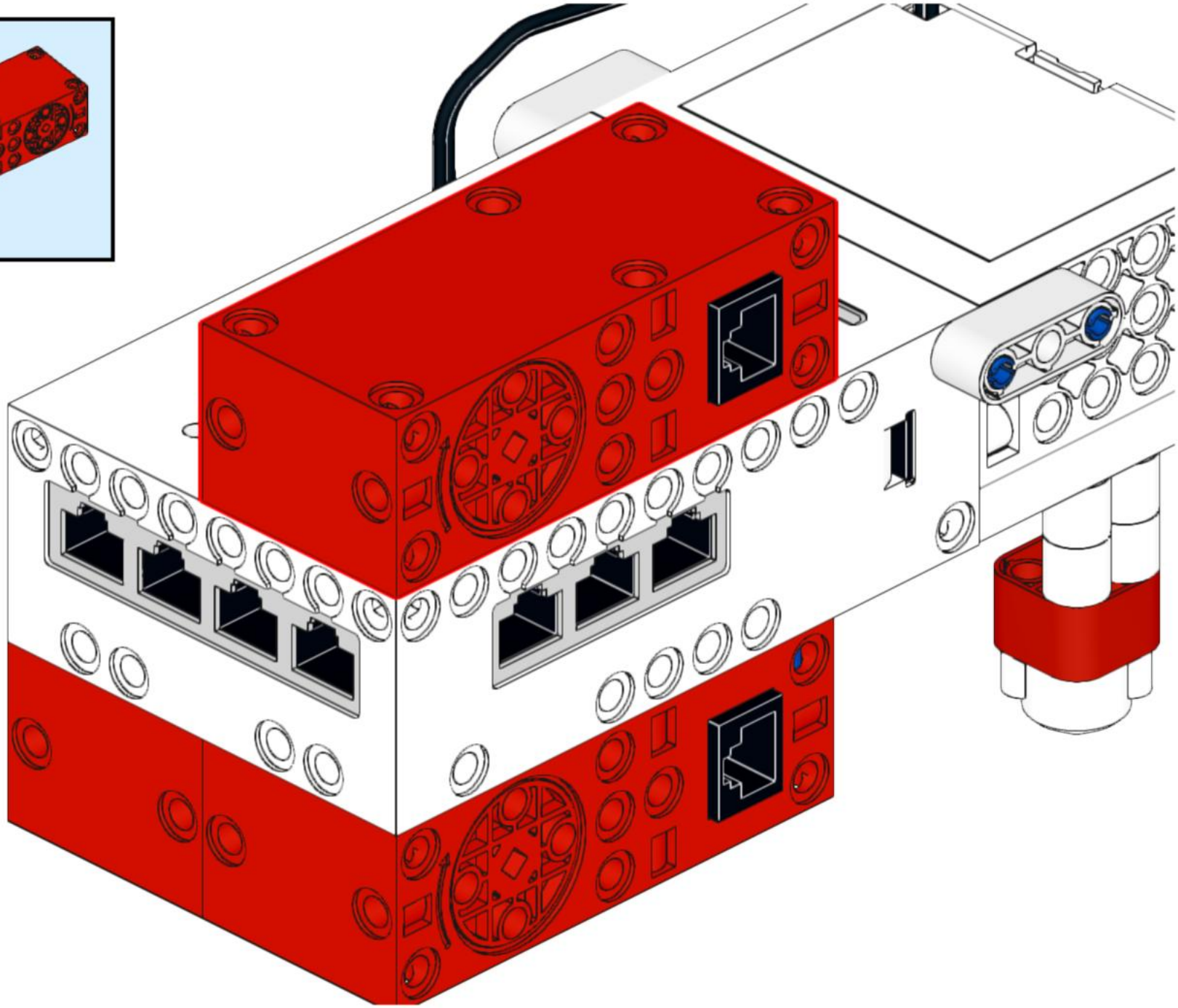

20

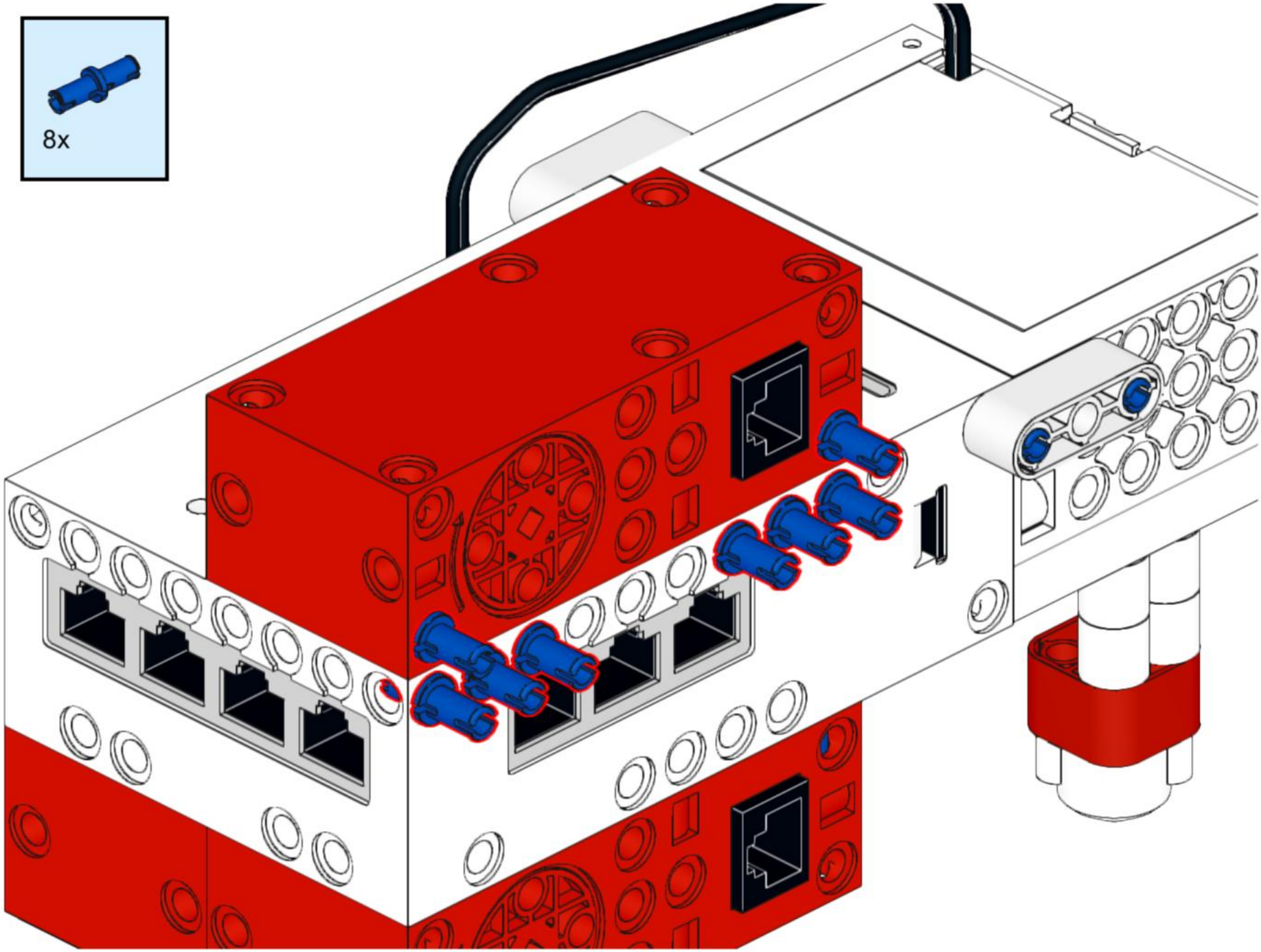

21

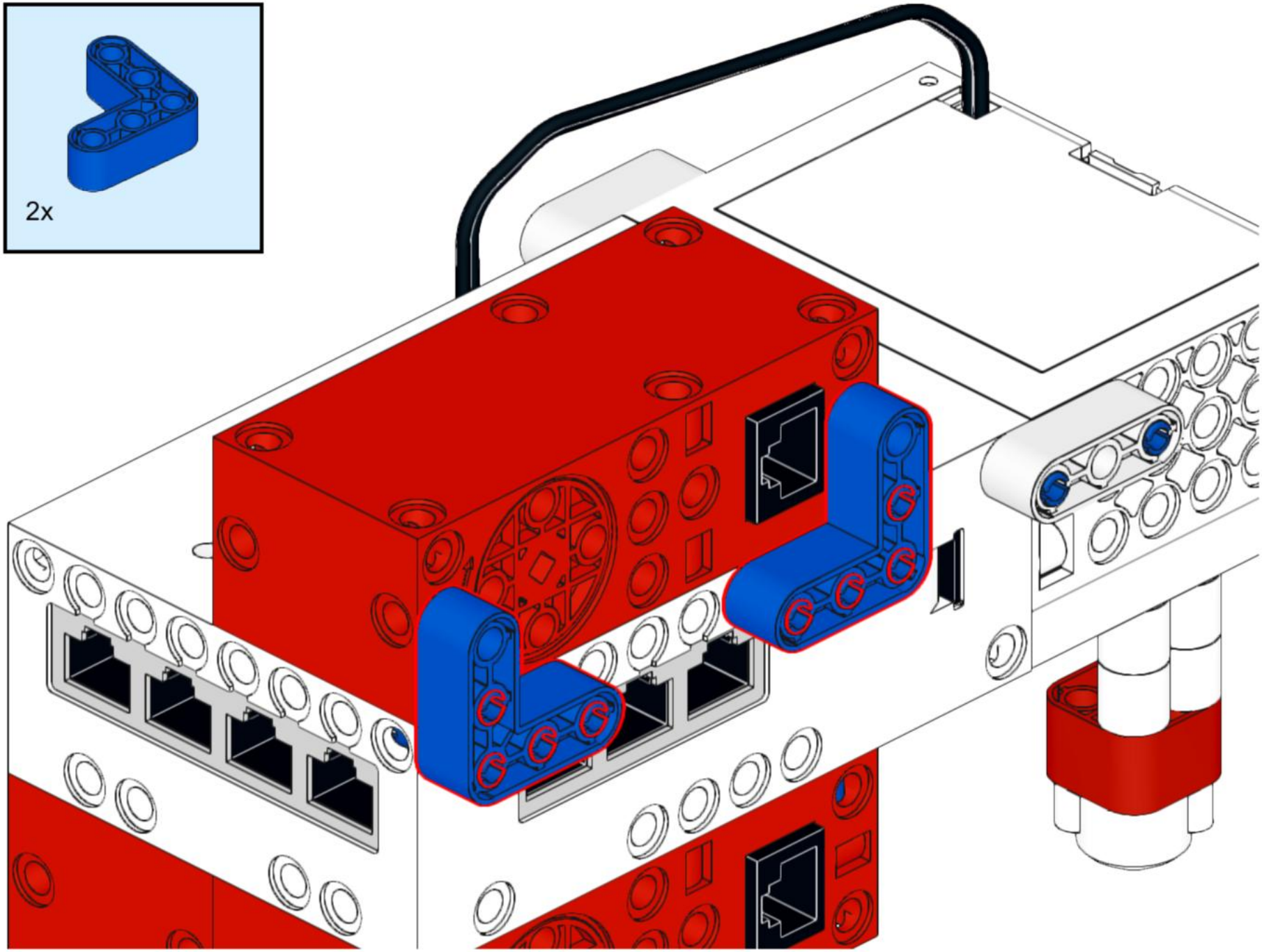

22

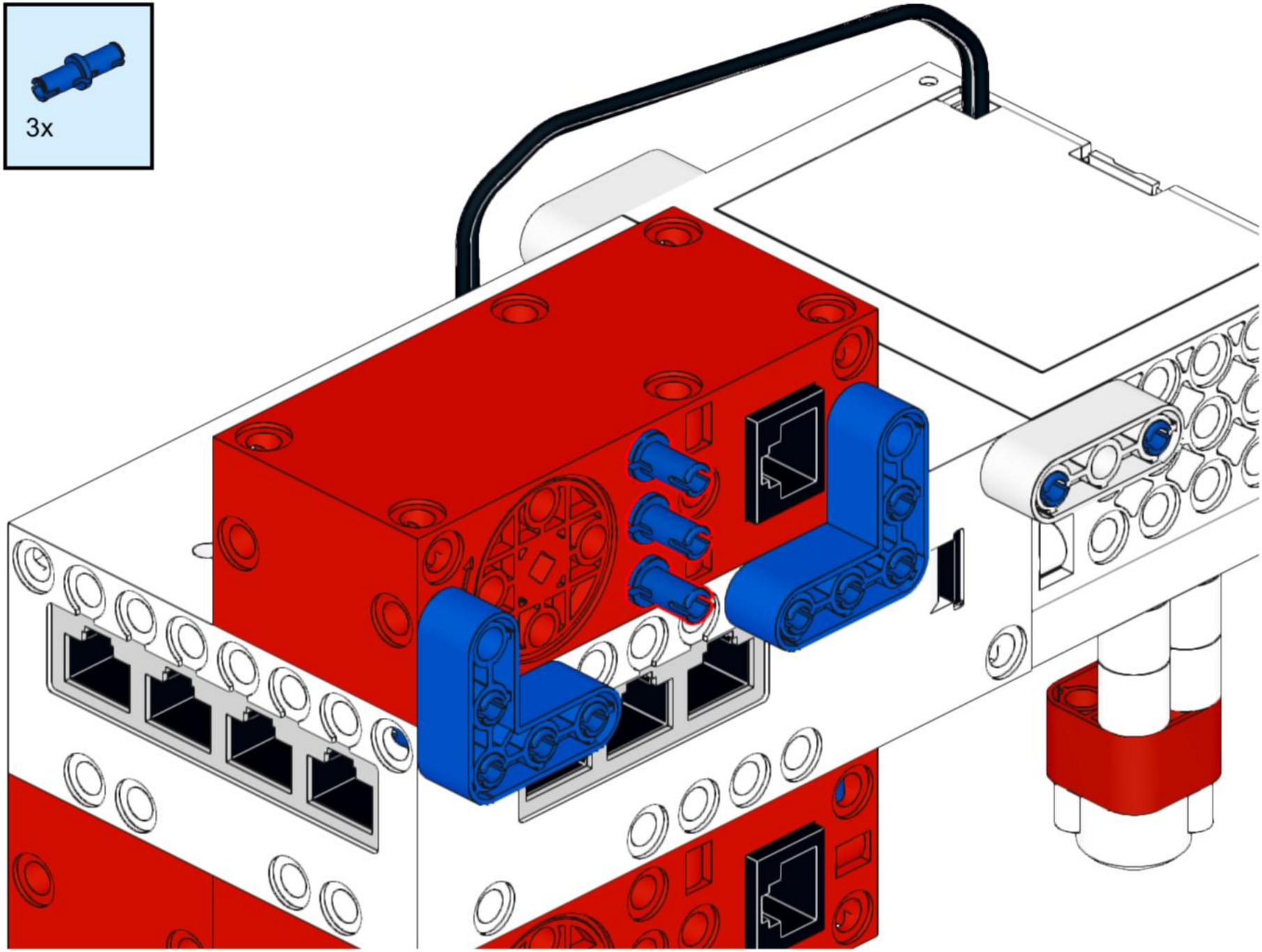

23

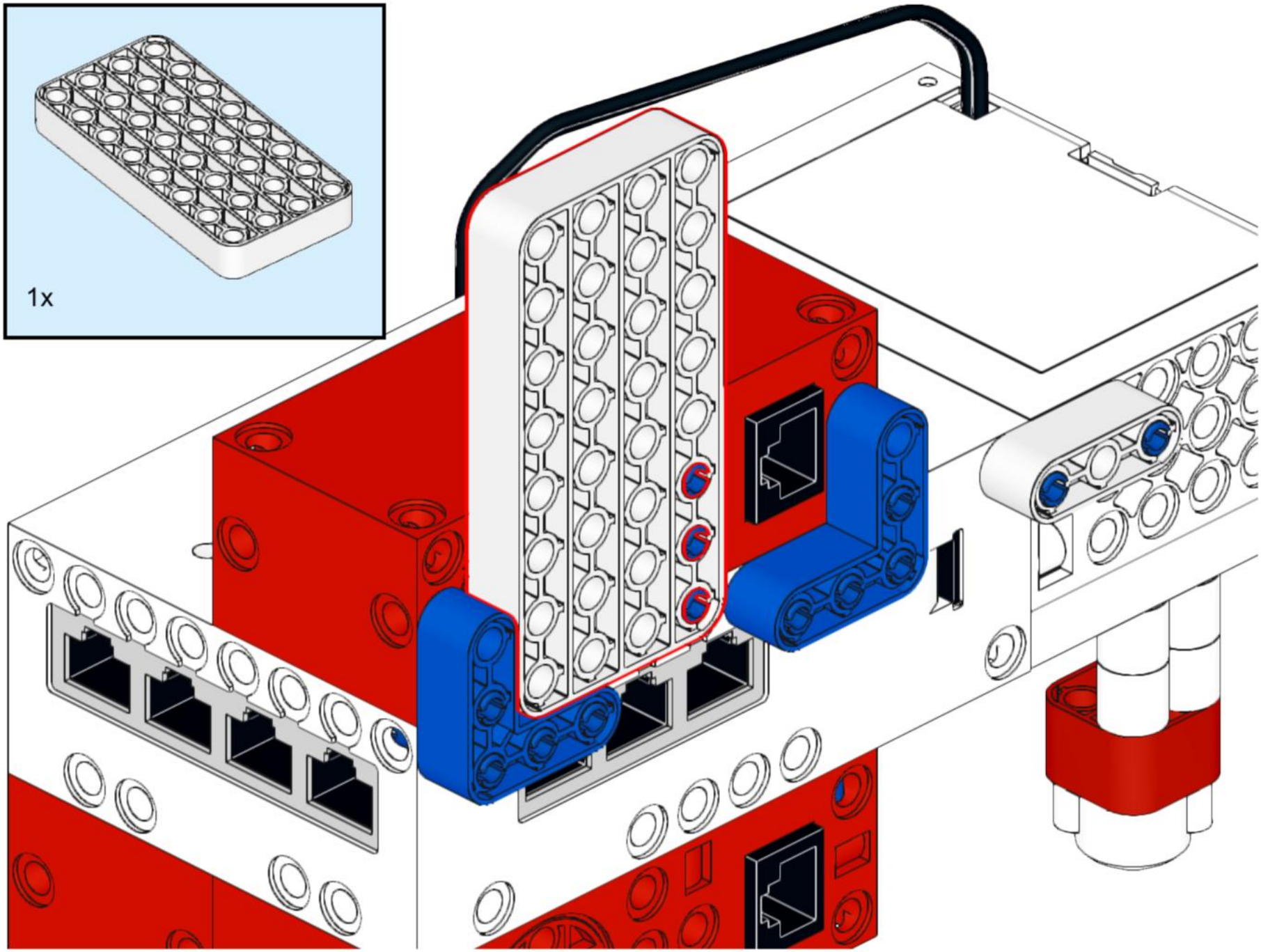

24

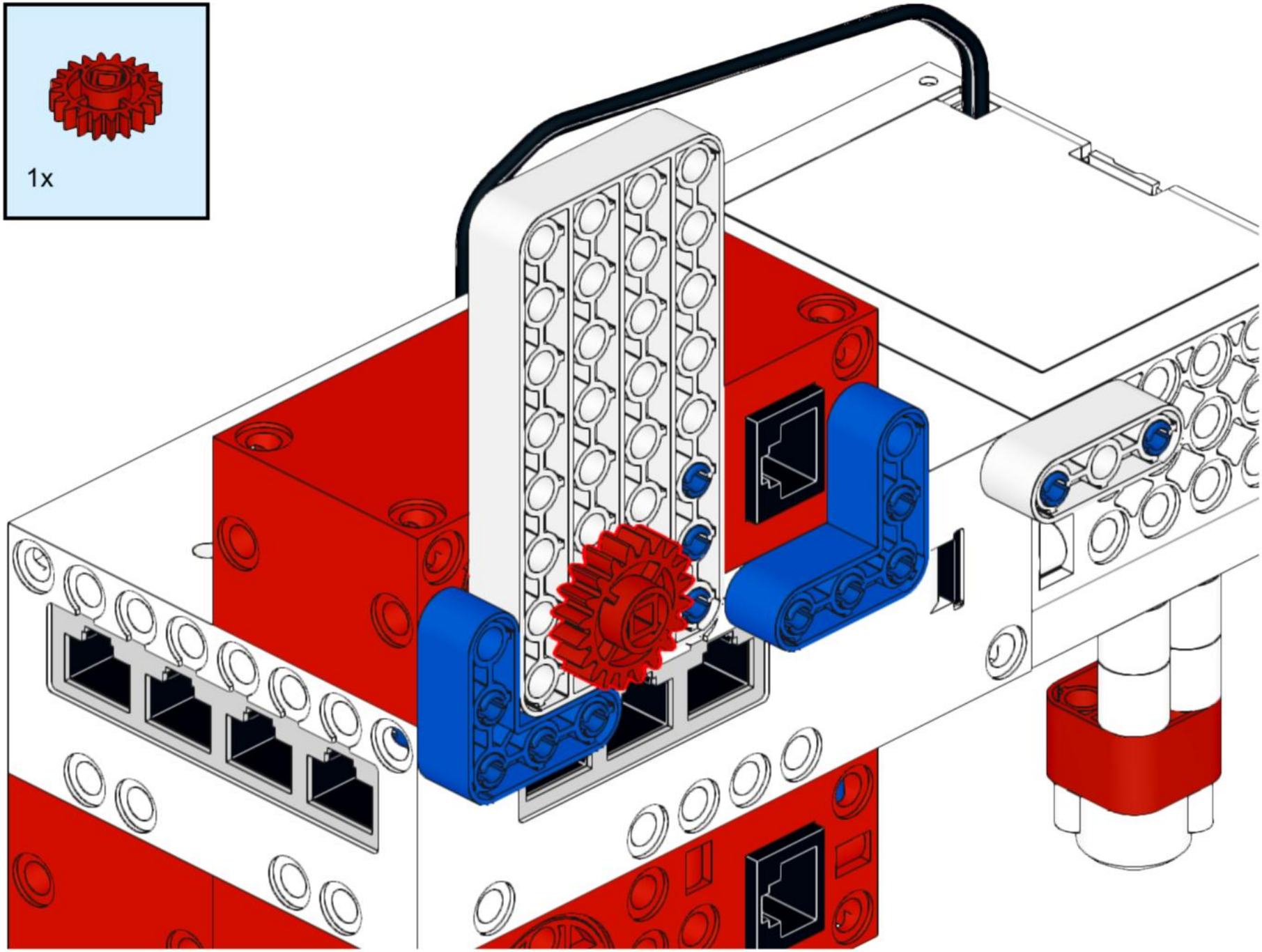

25

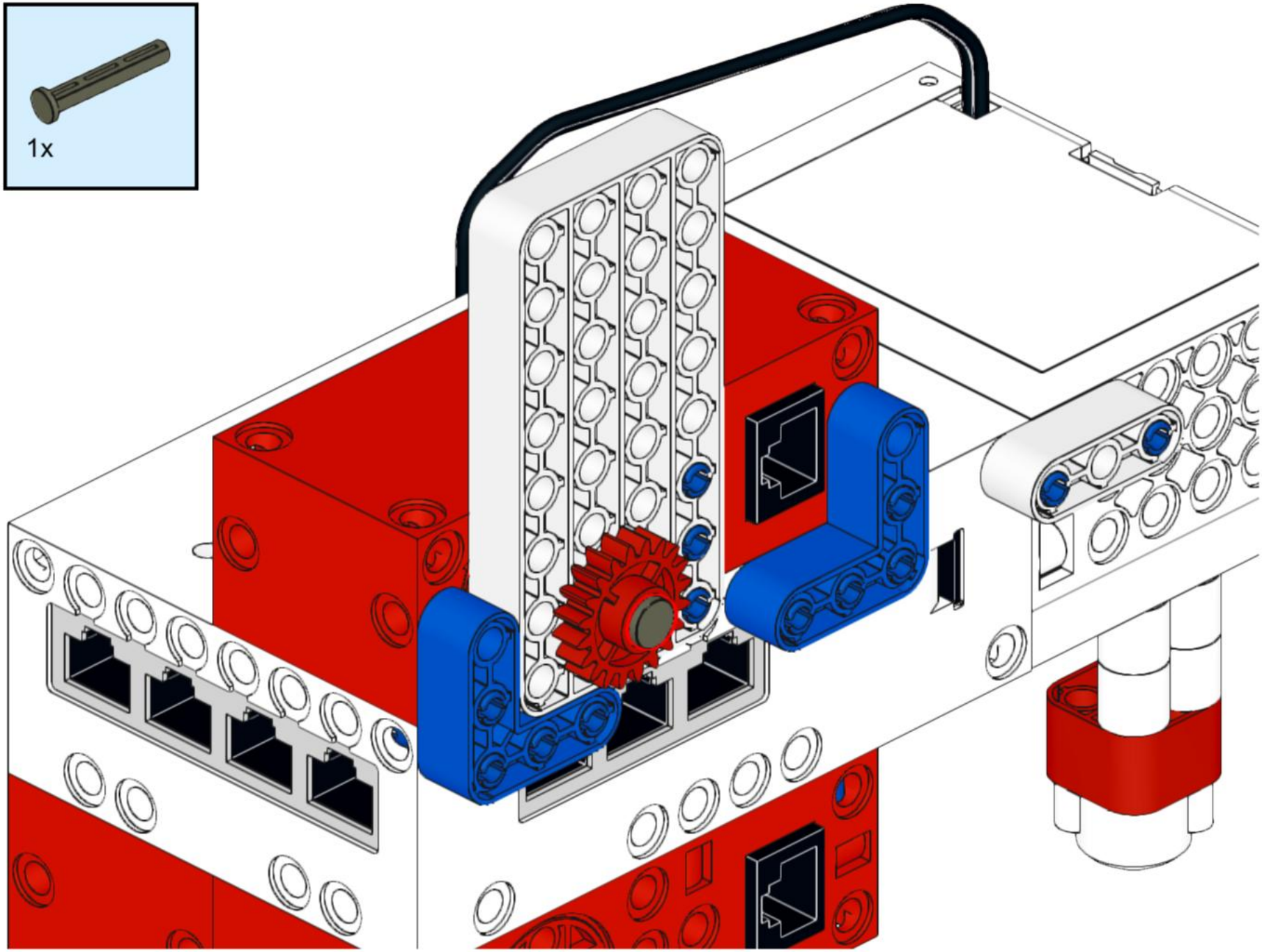

26

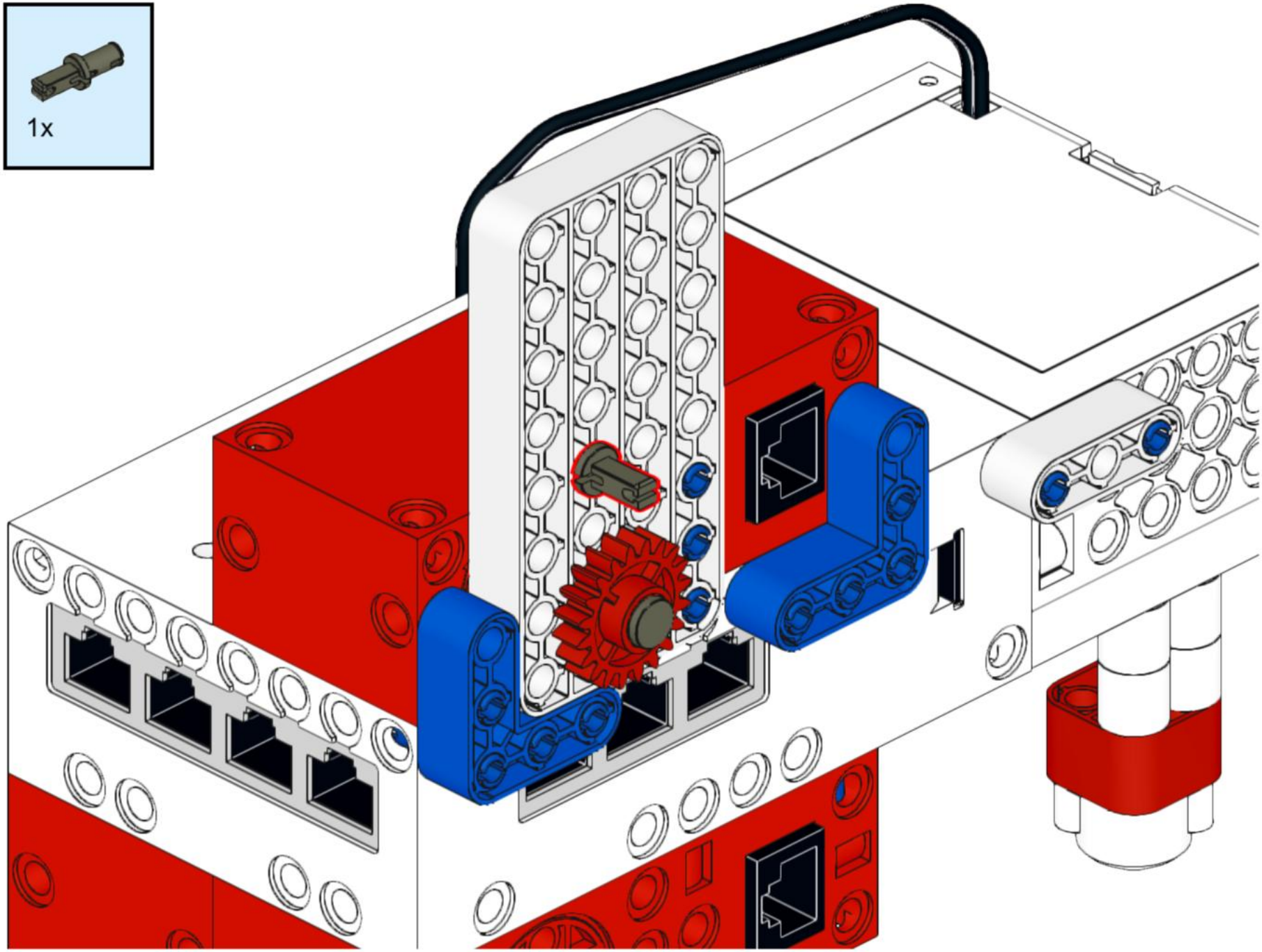

27

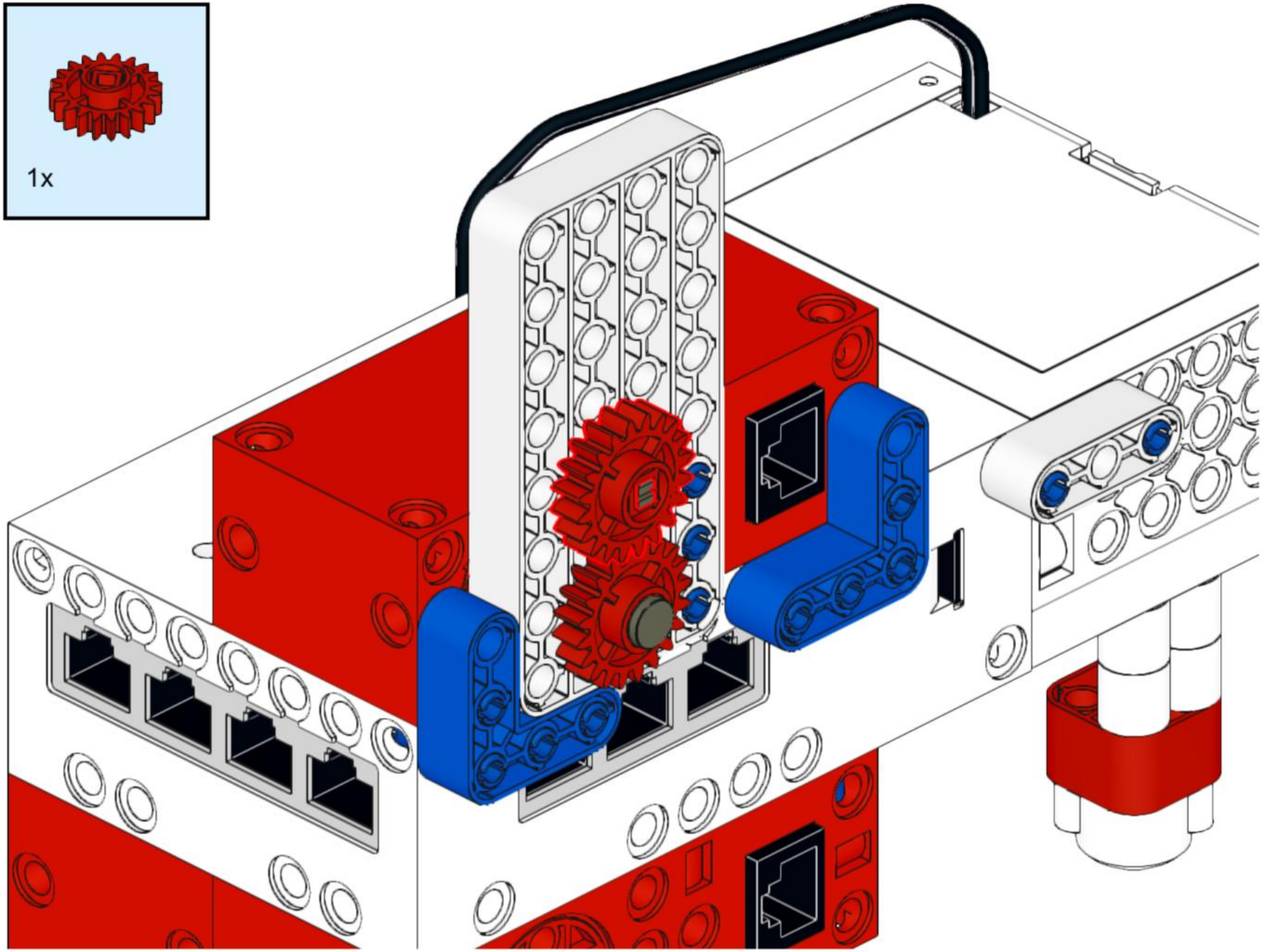

28

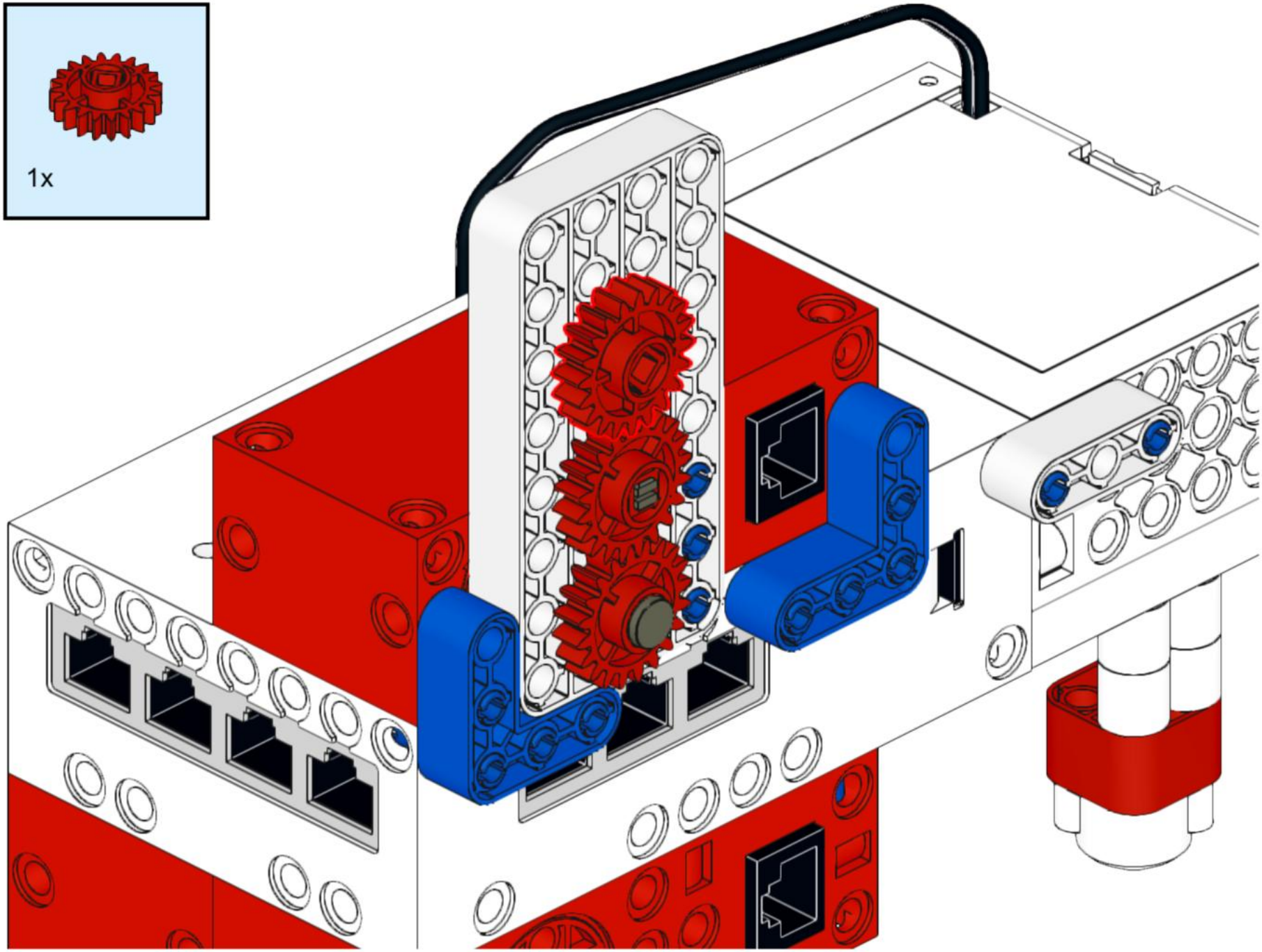

29

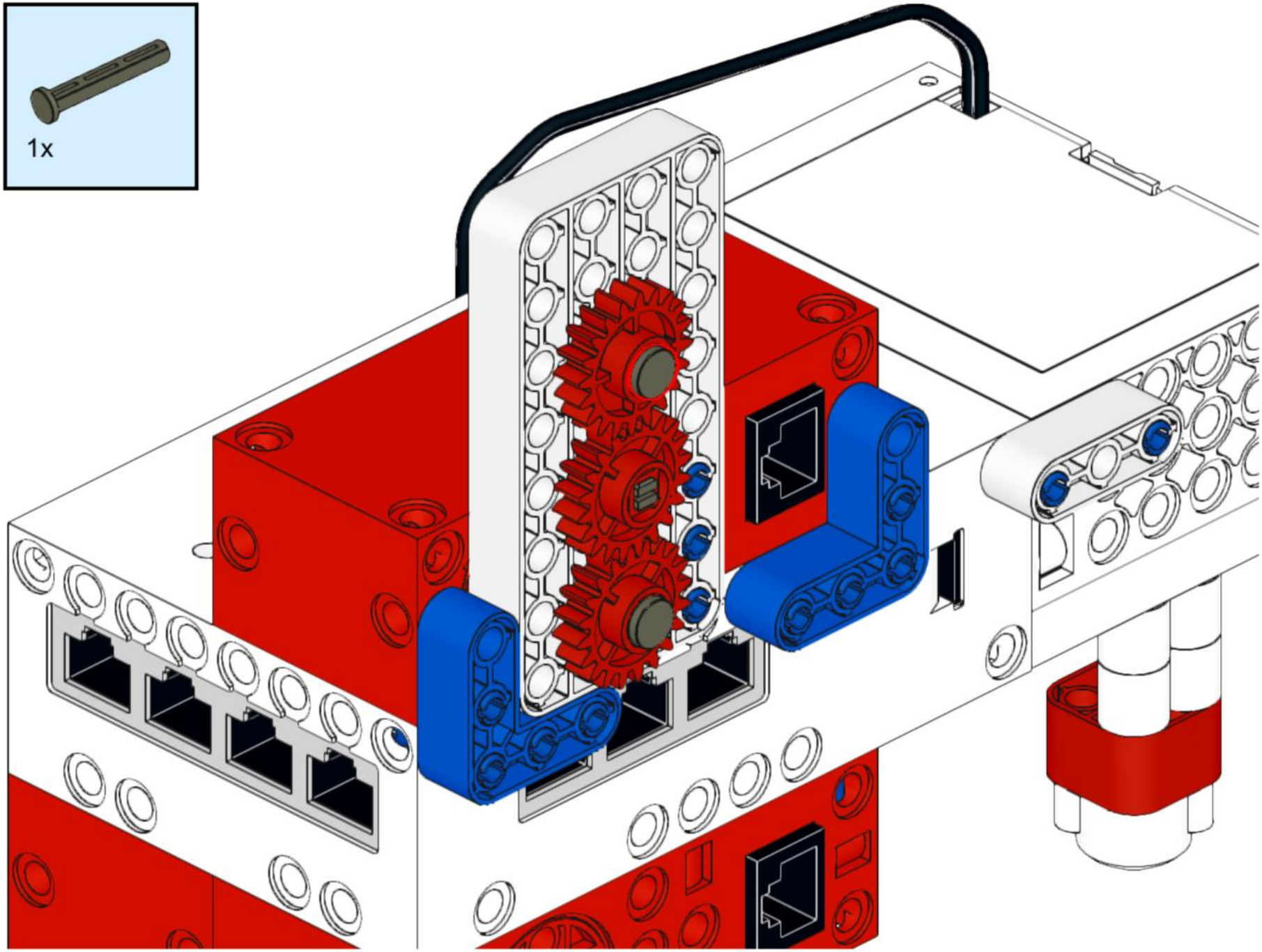

30

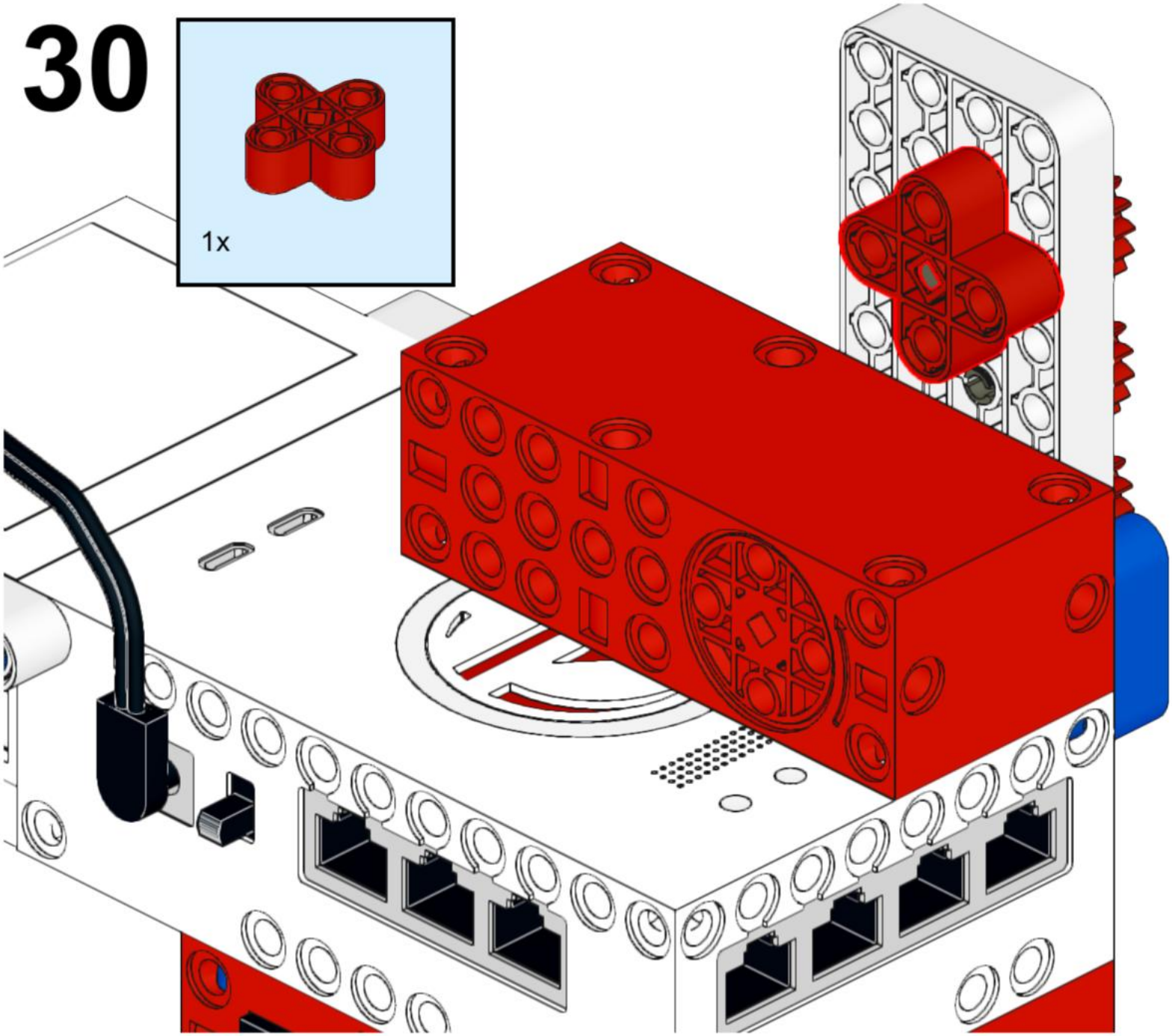

31

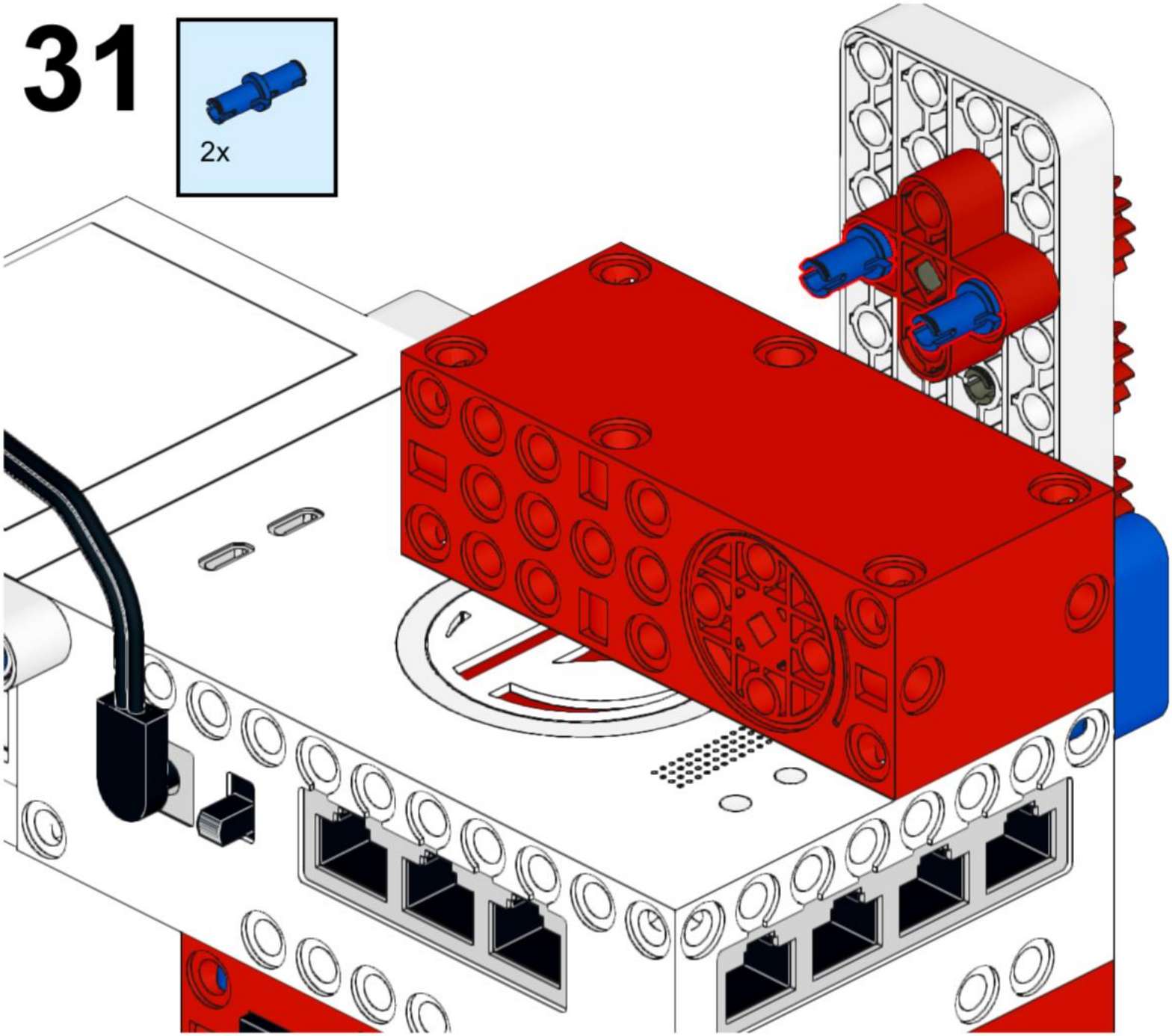

32

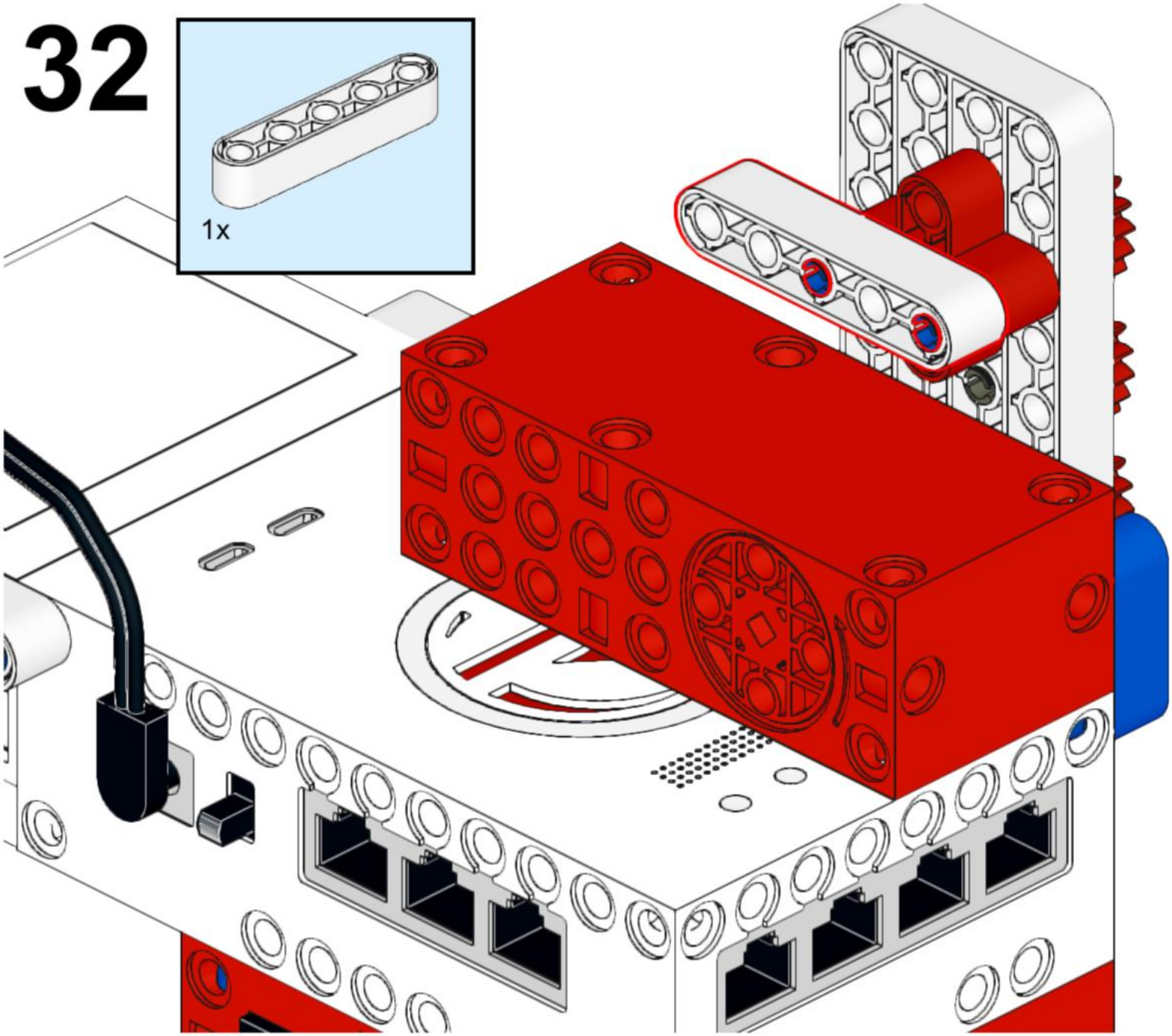

33

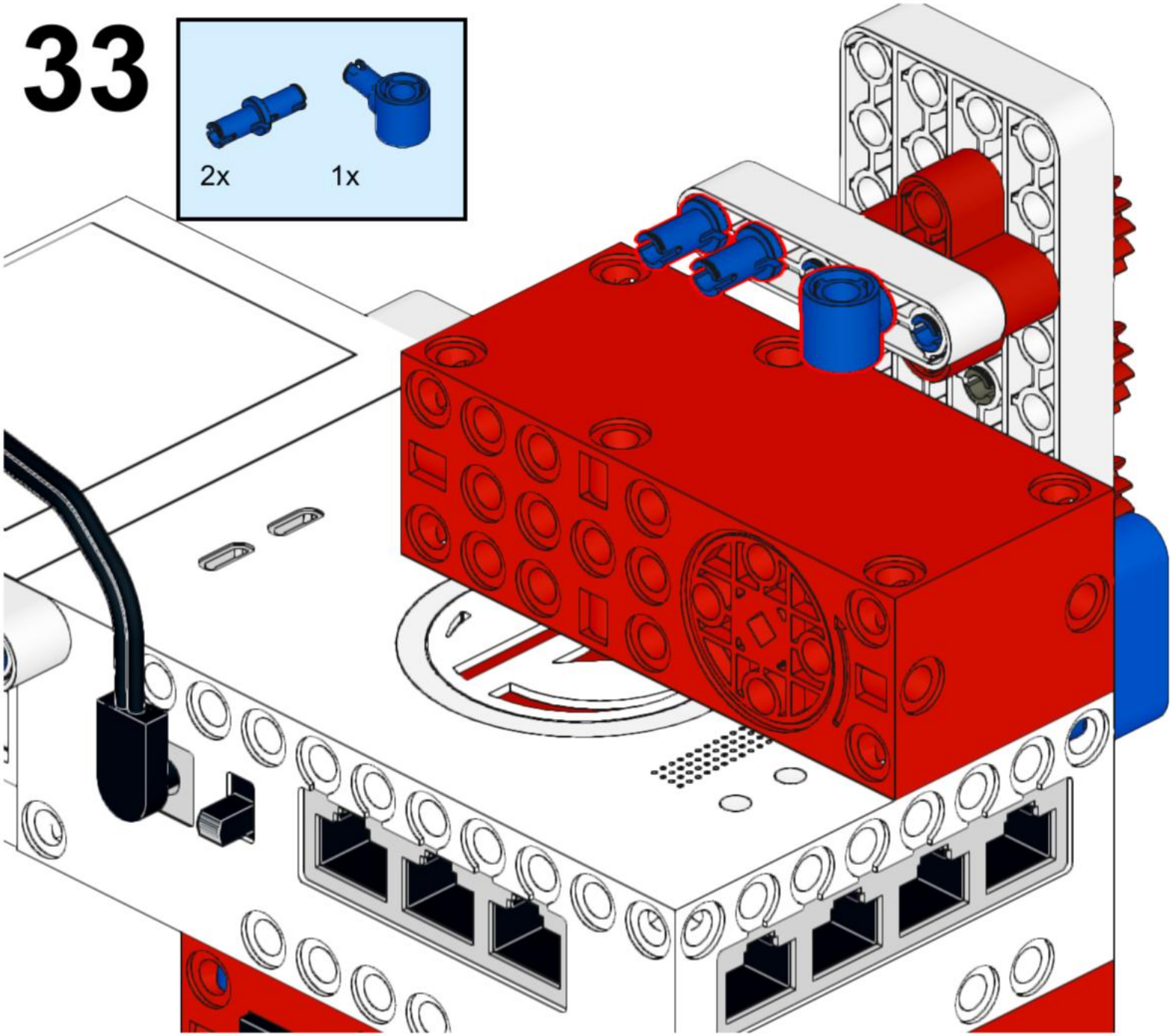

34

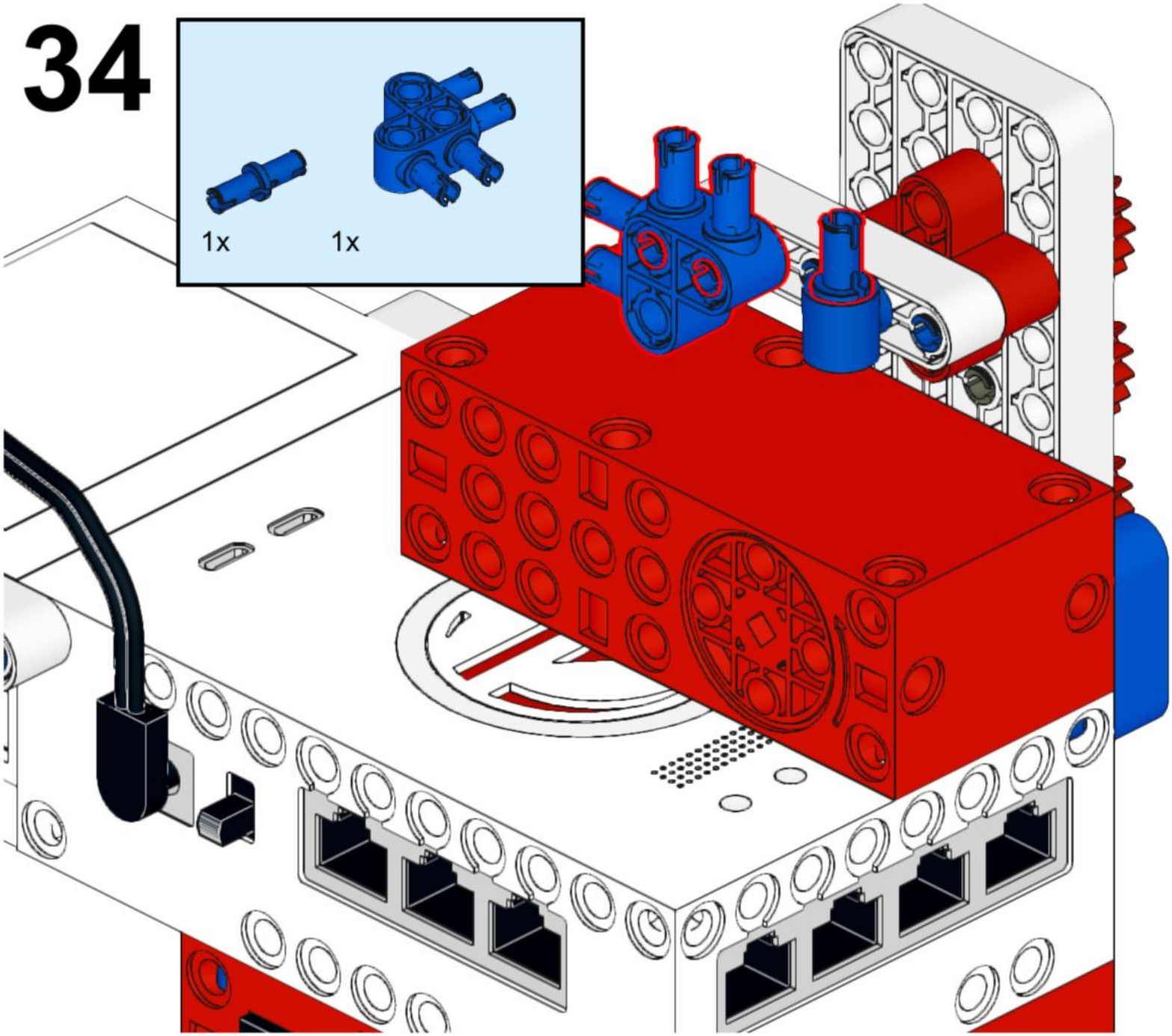

35

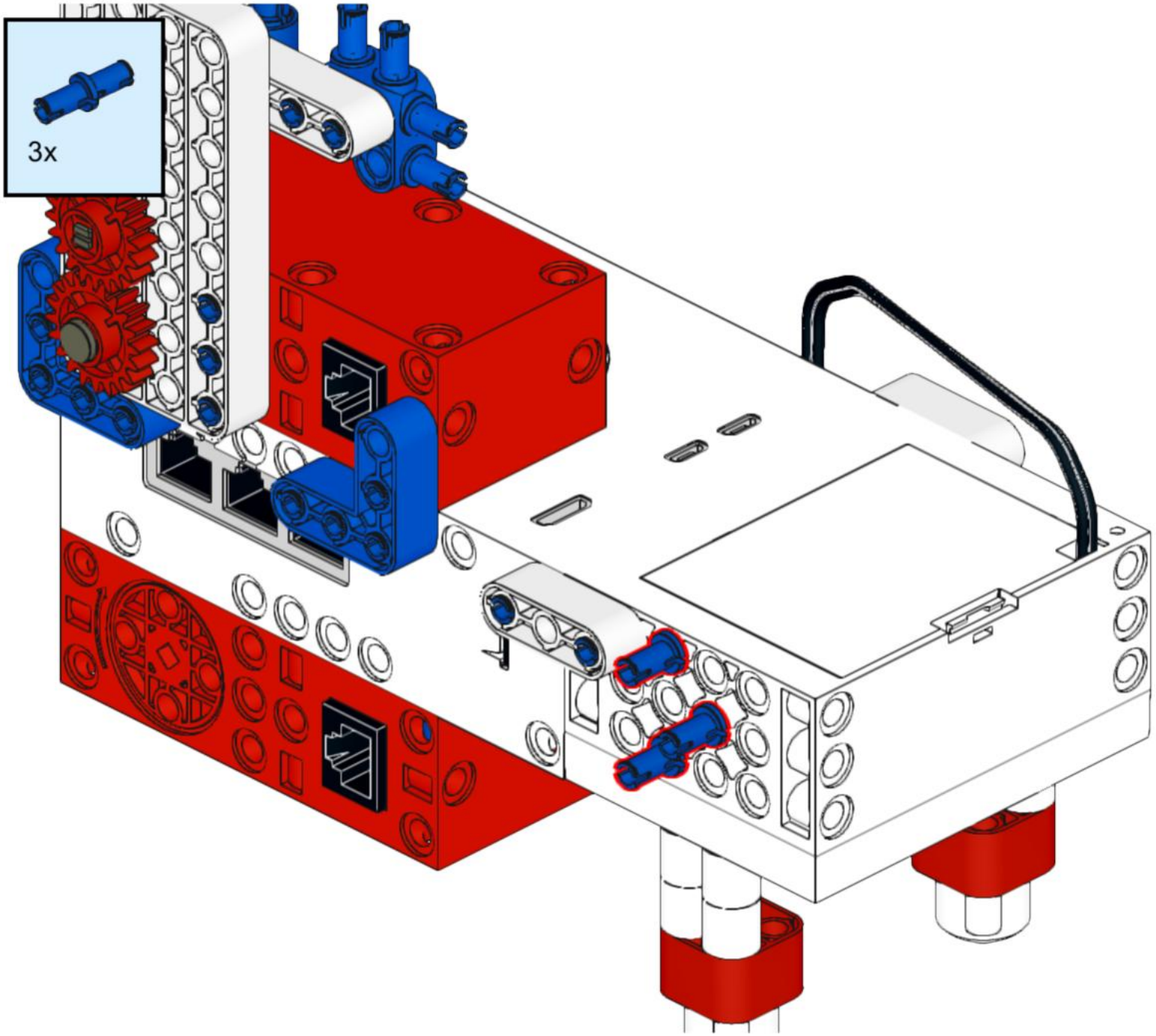

36

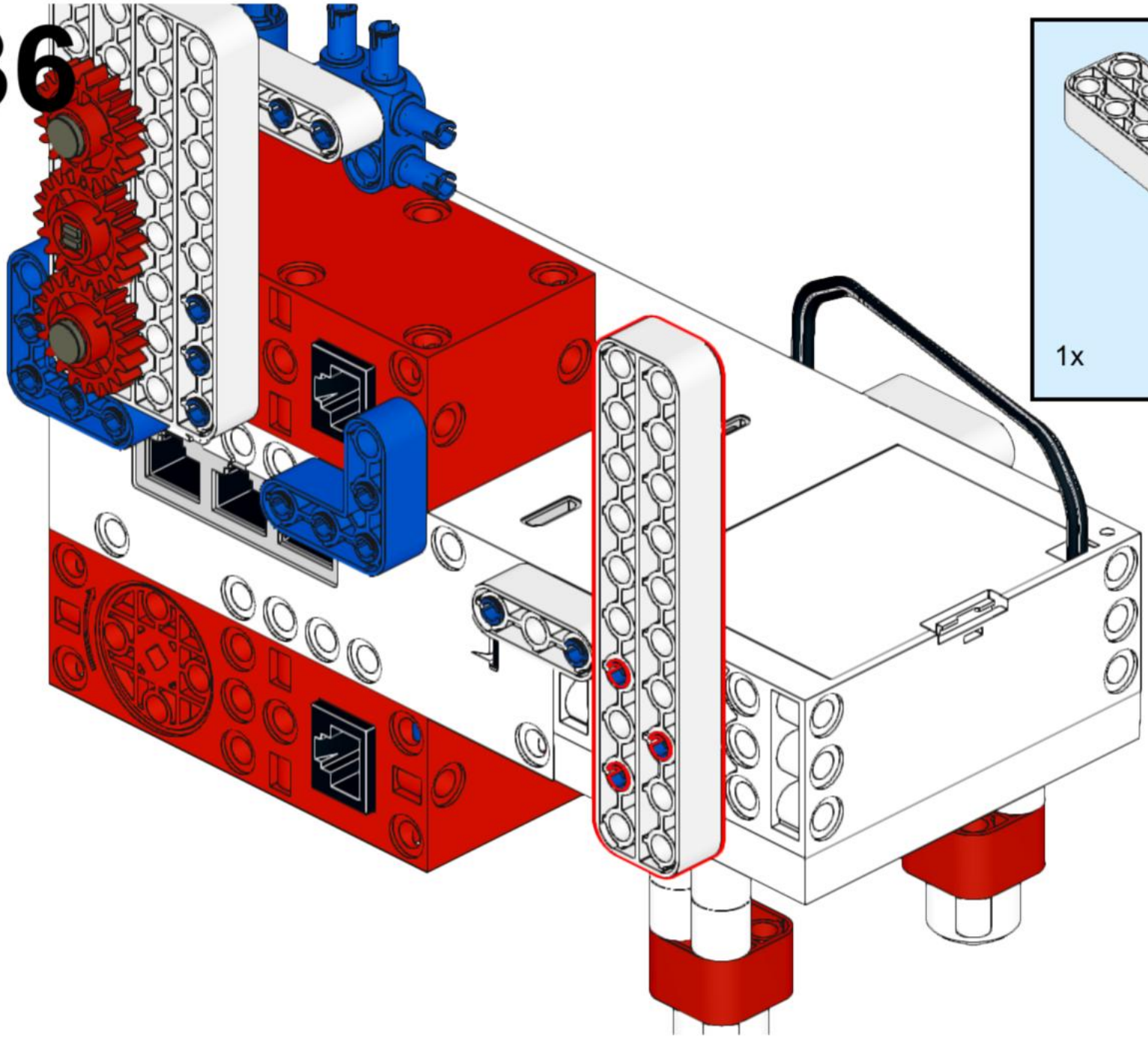

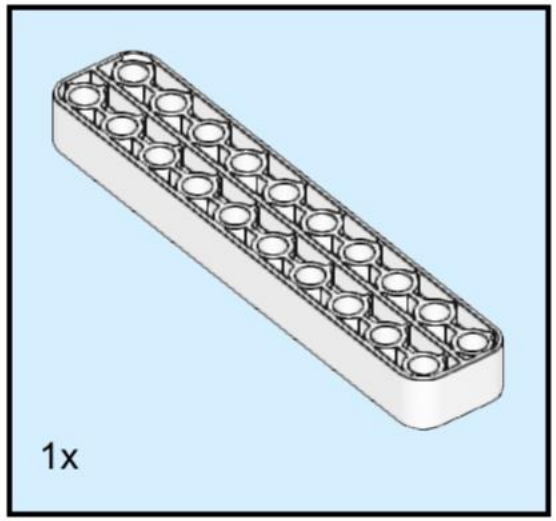

37

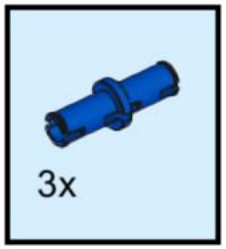

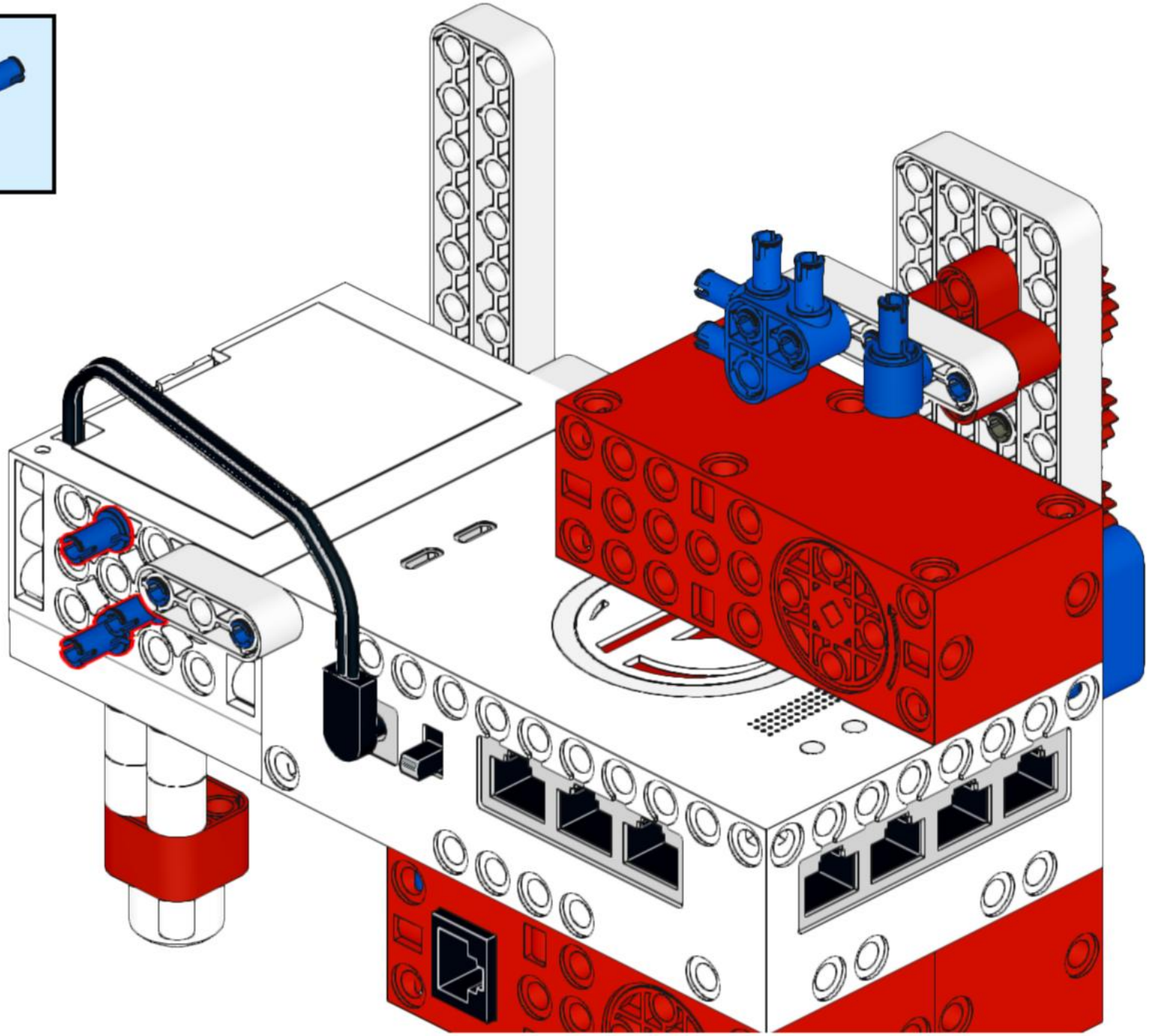

38

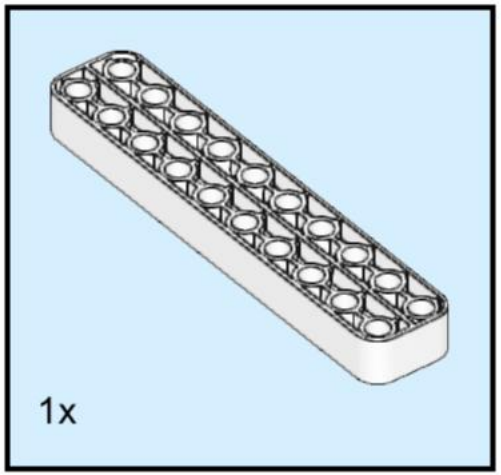

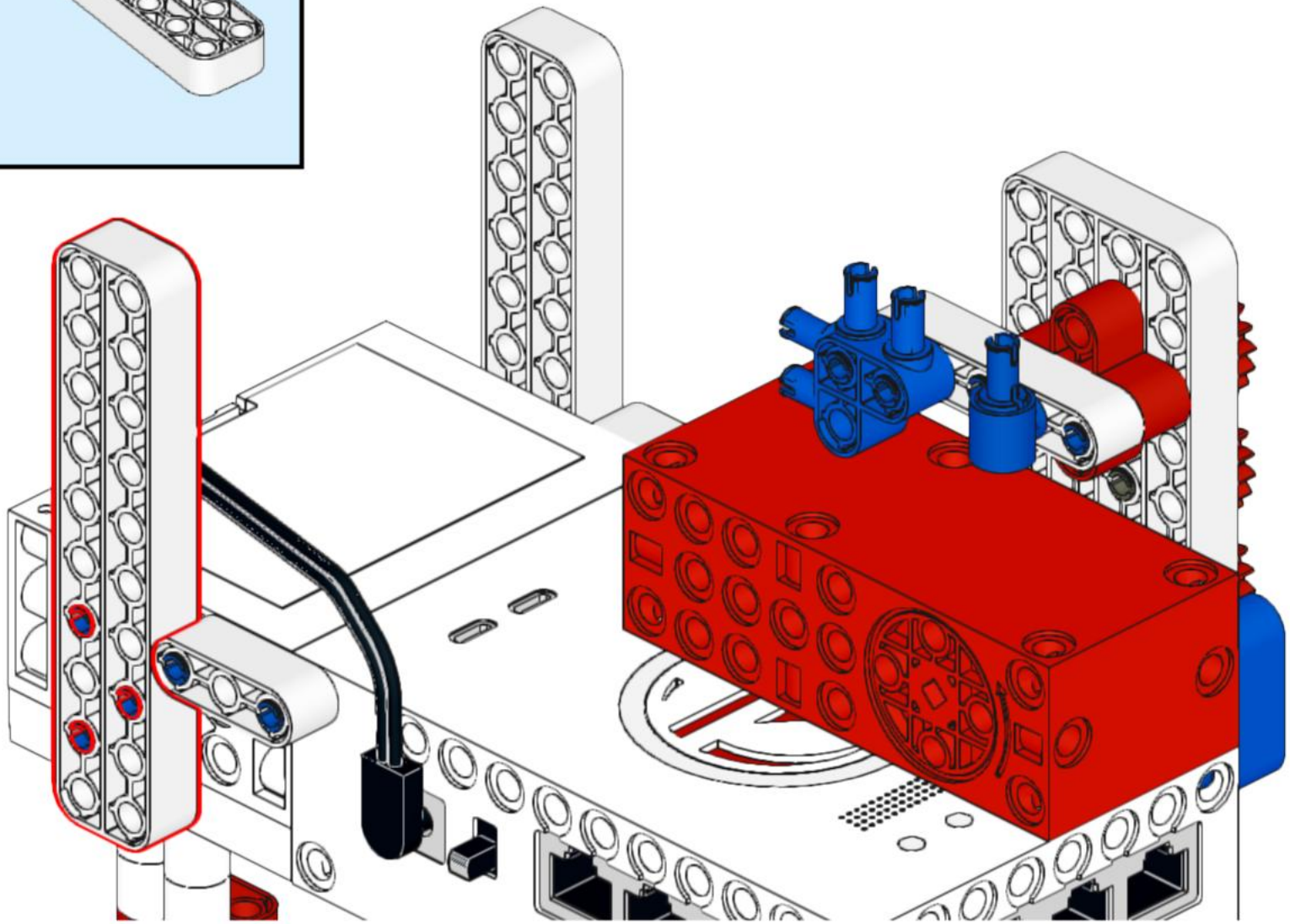

39

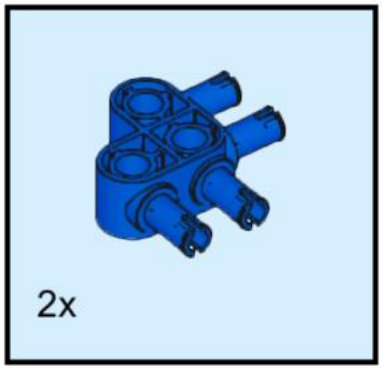

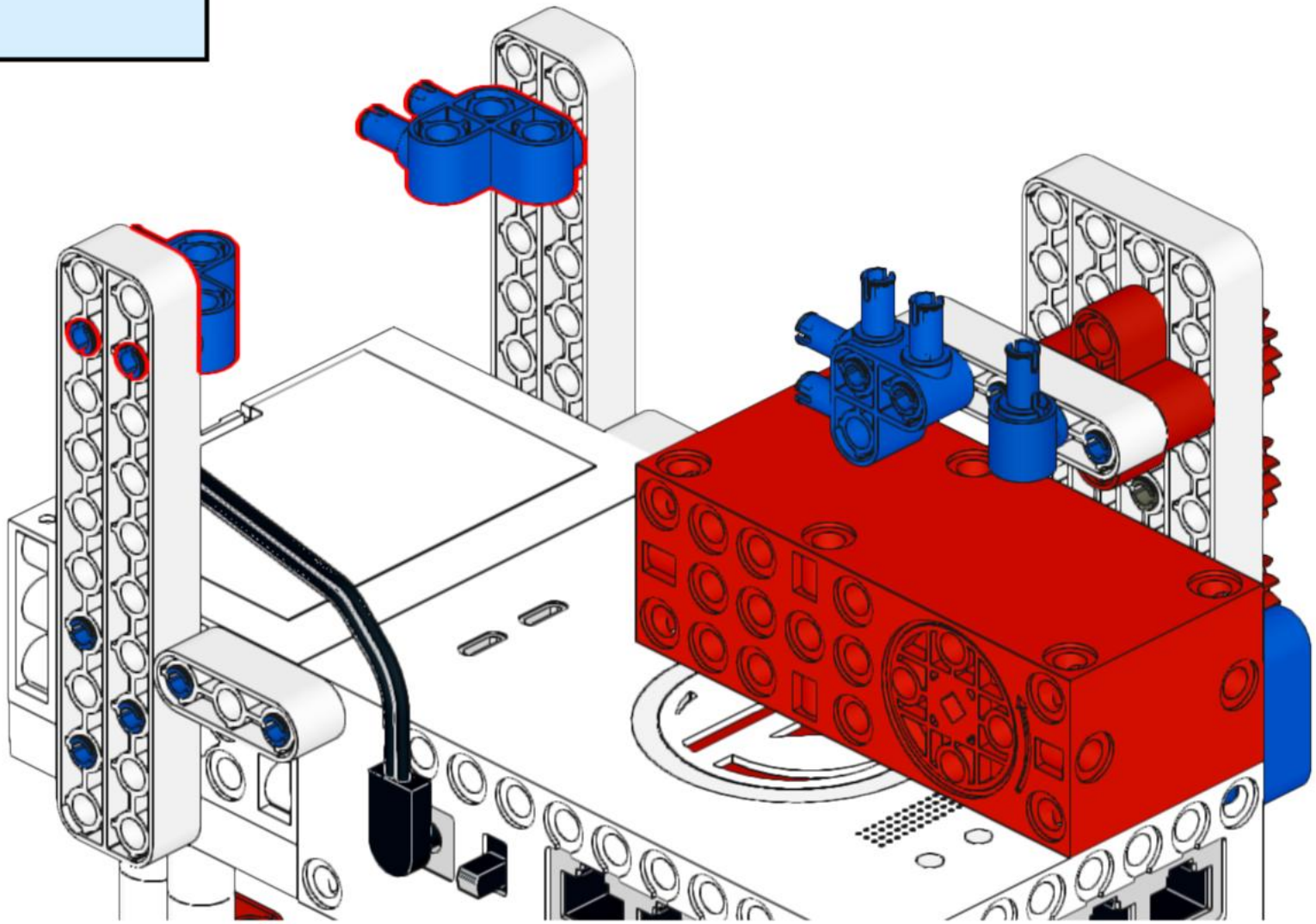

40

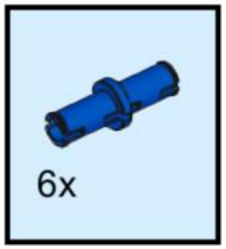

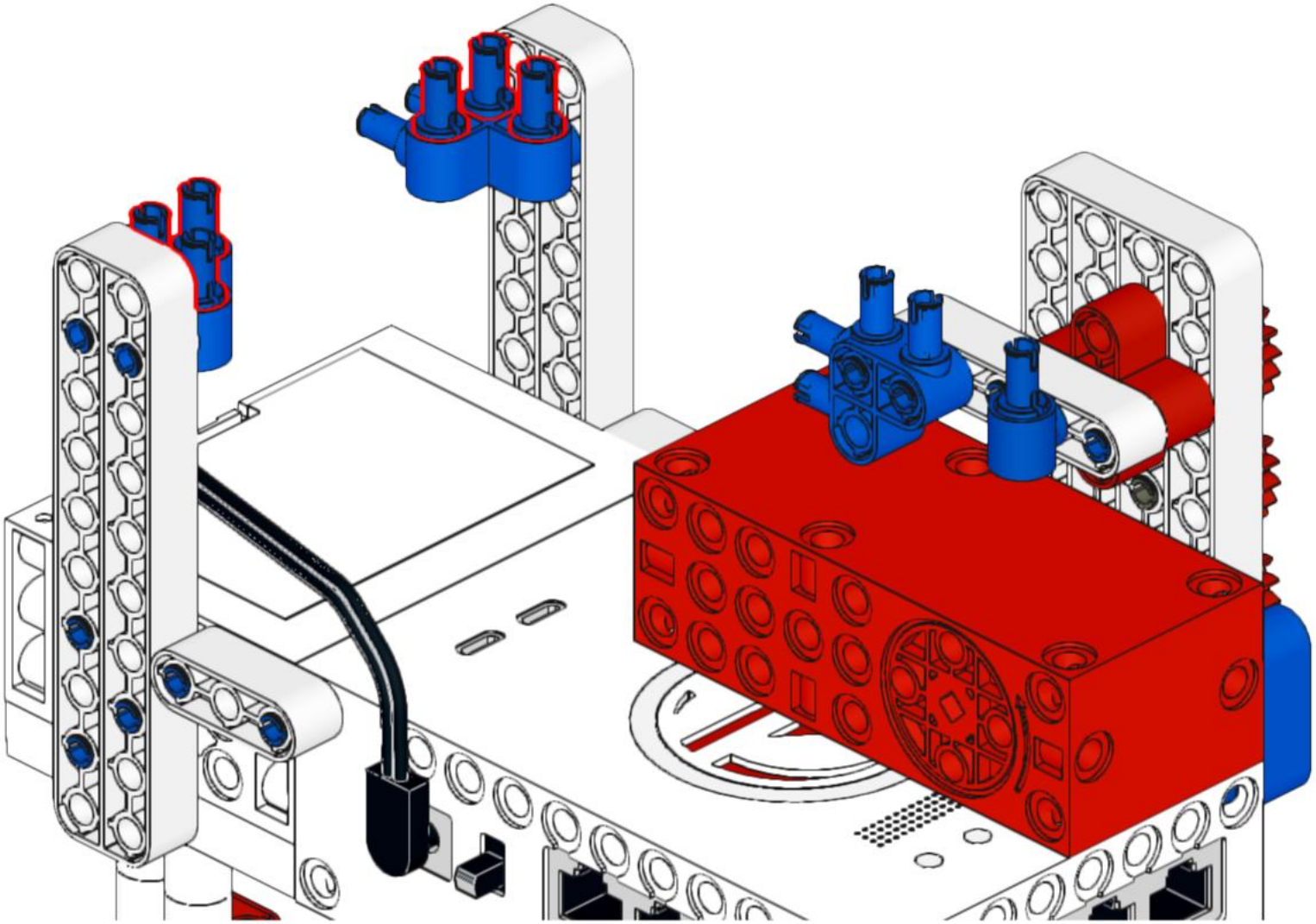

41

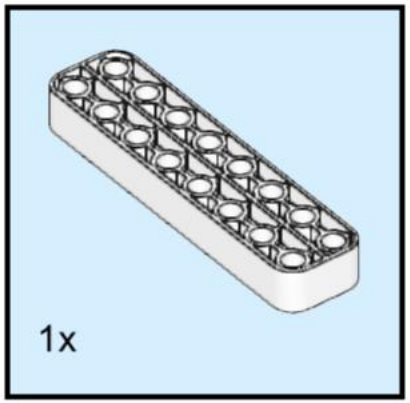

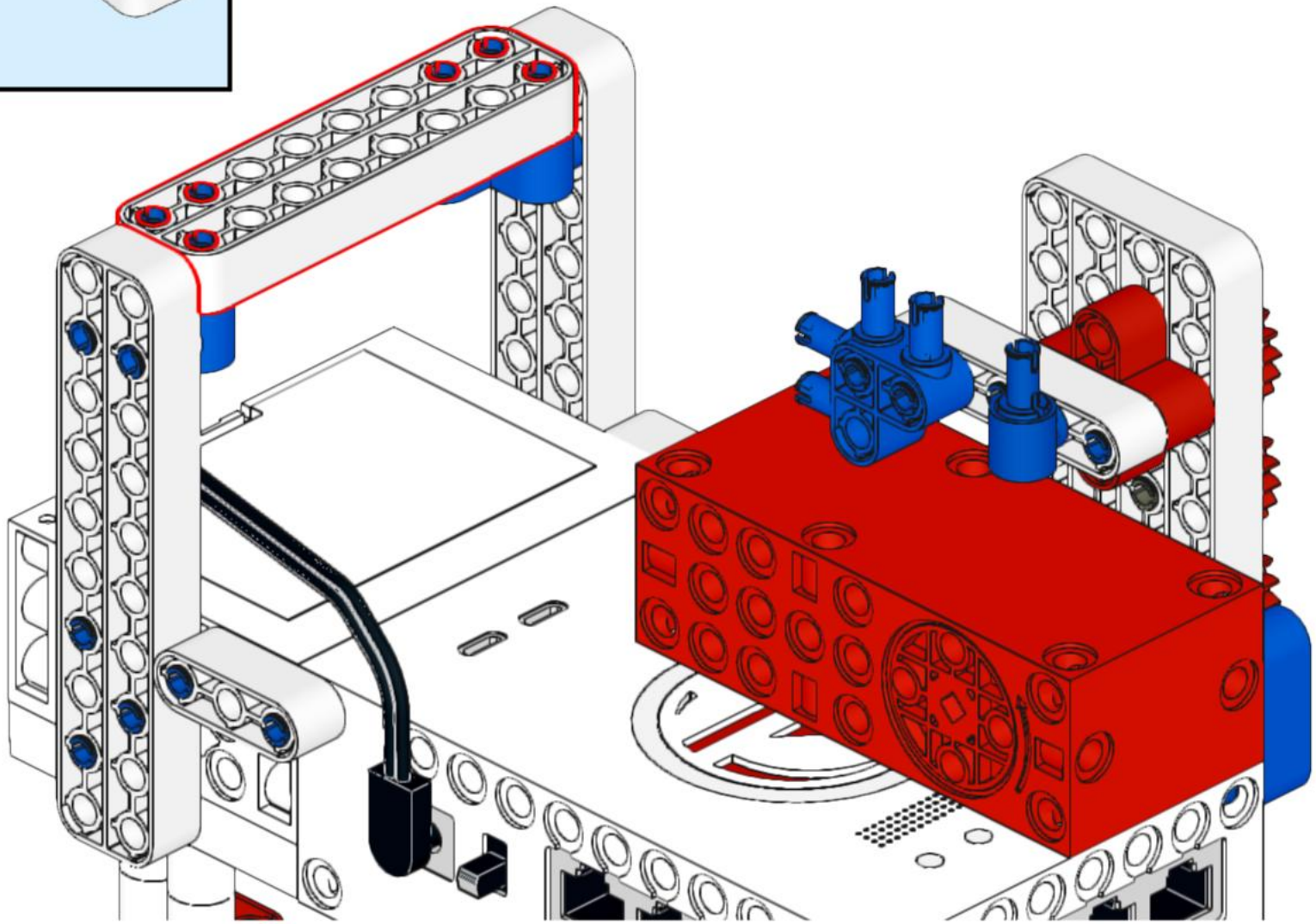

42

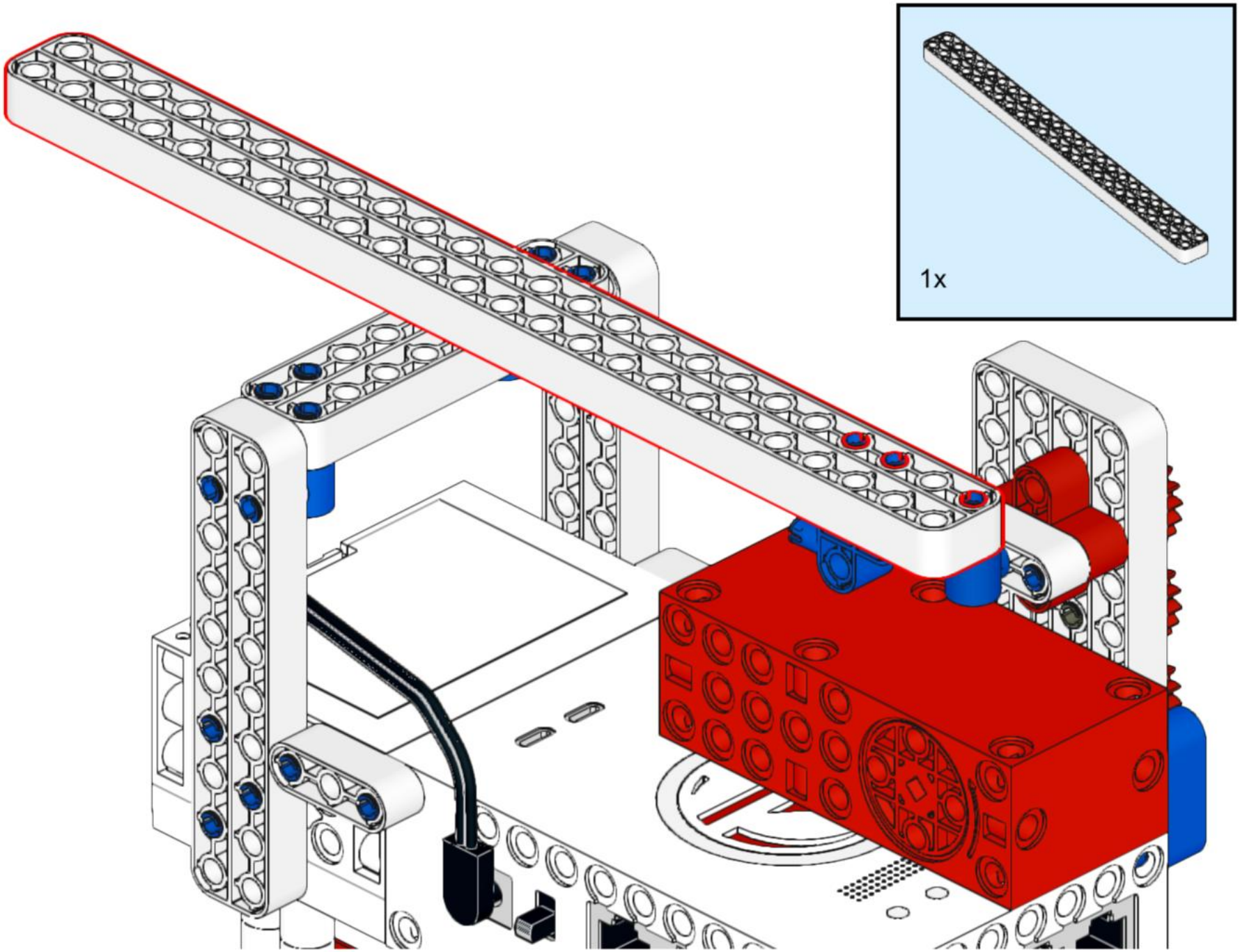

43

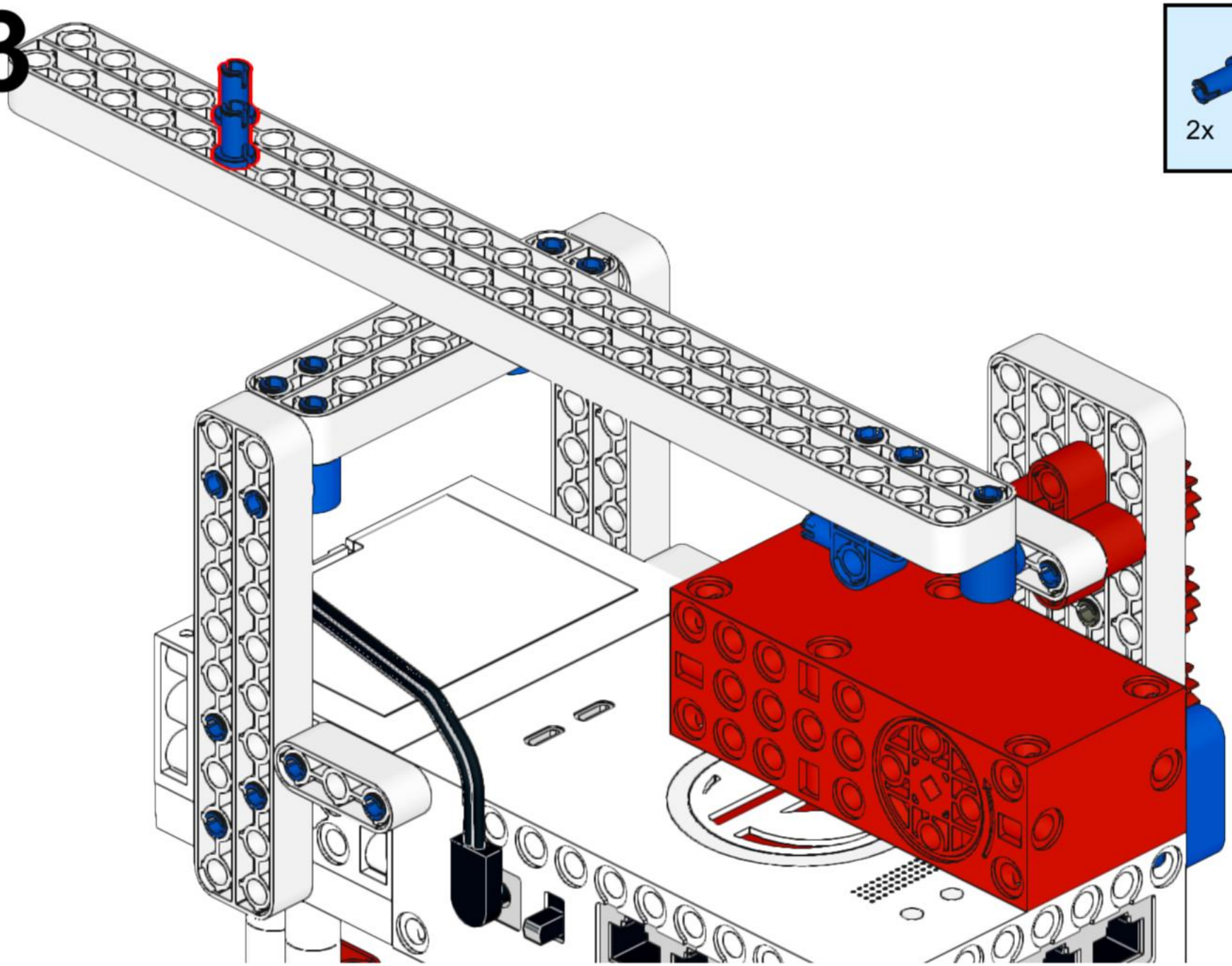

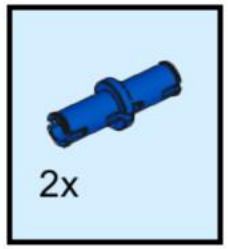

44

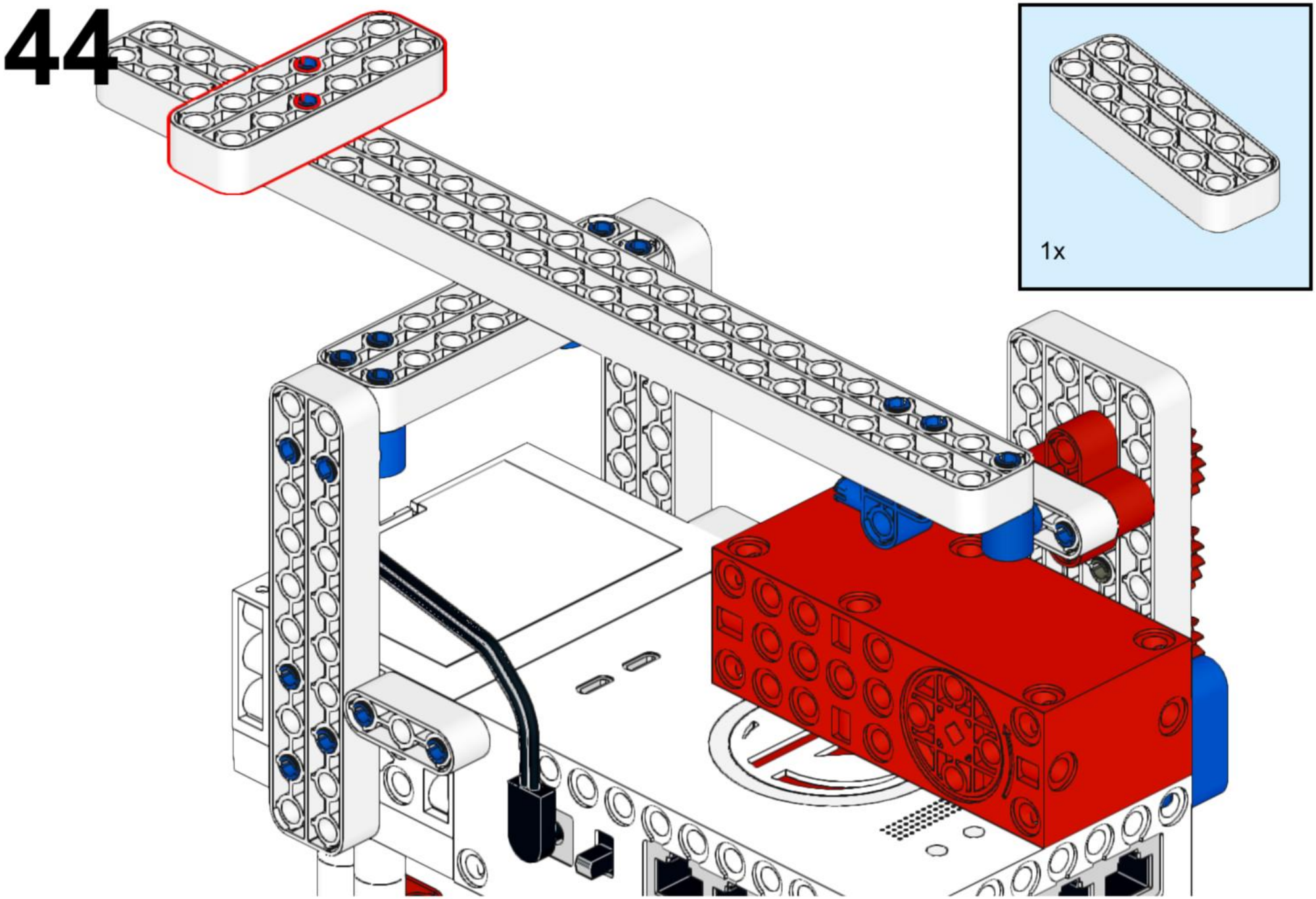

45

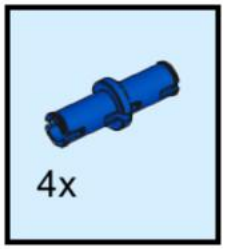

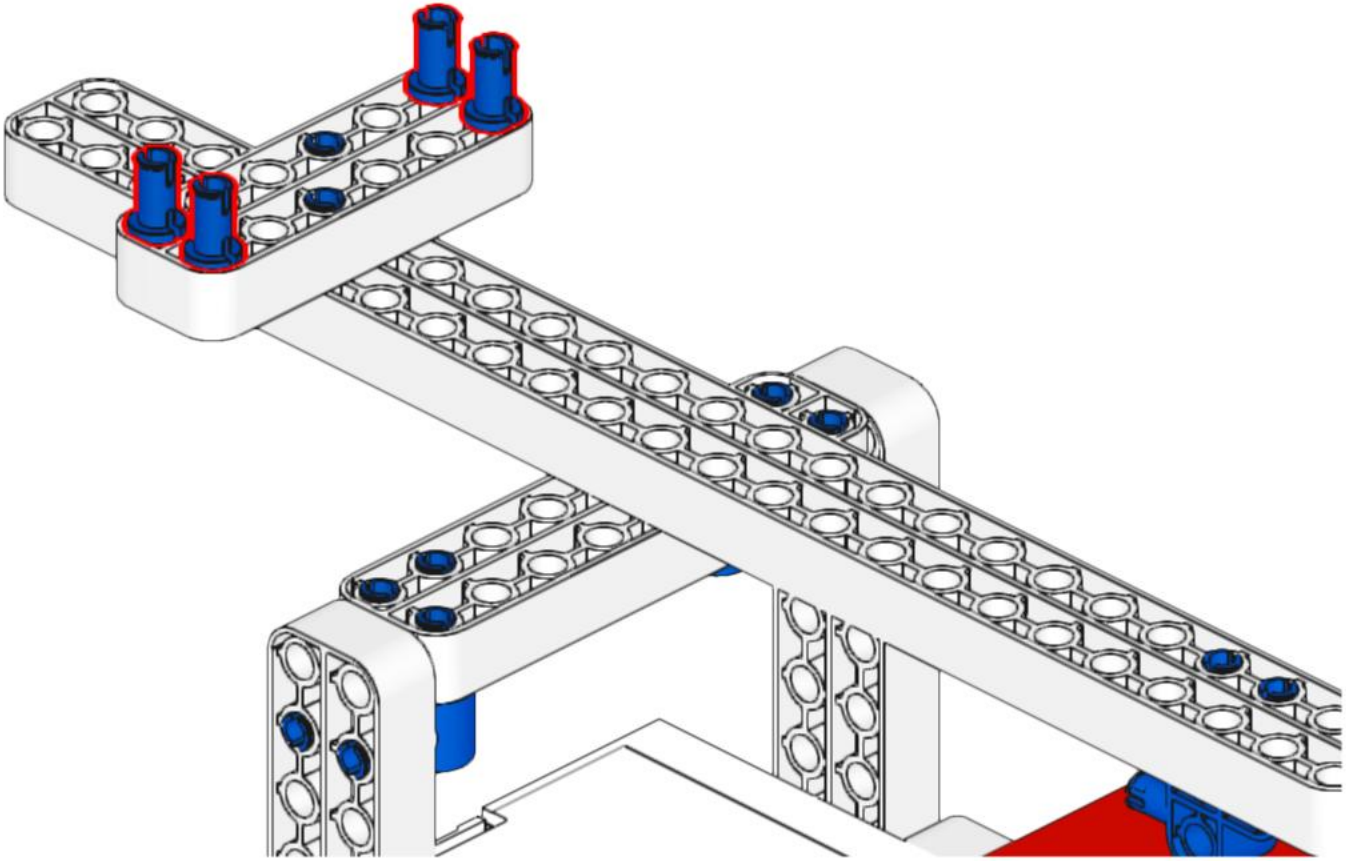

46

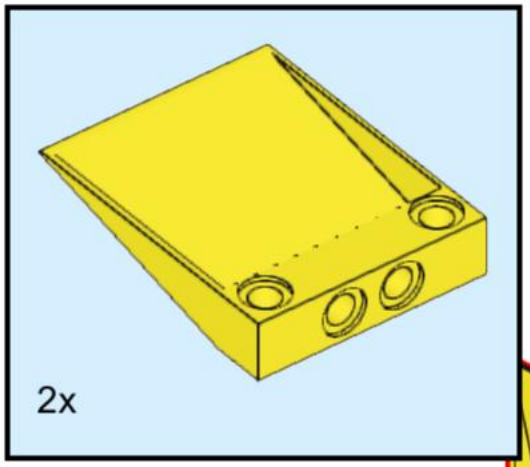

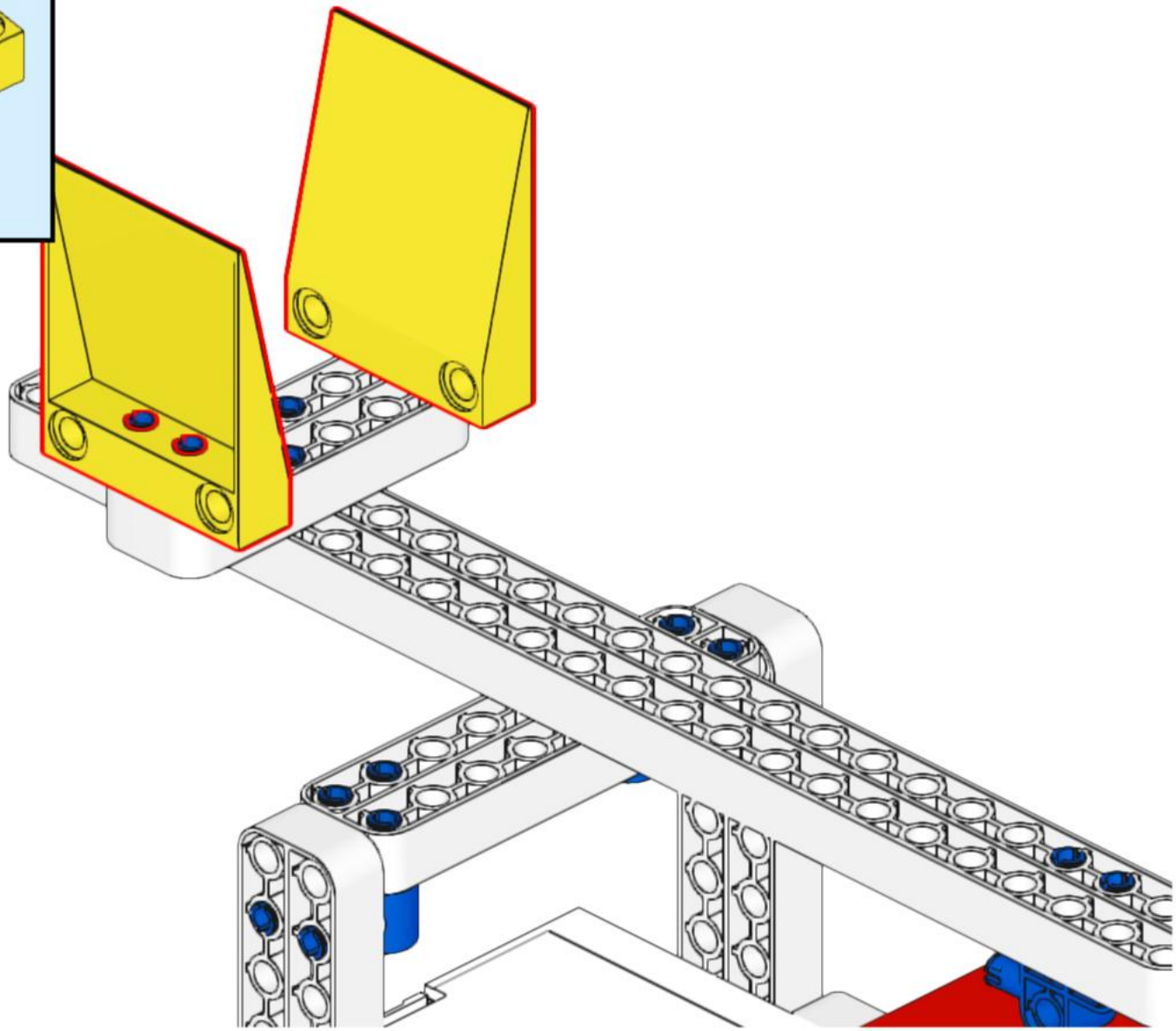

47

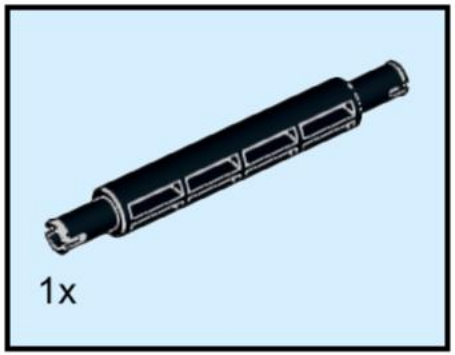

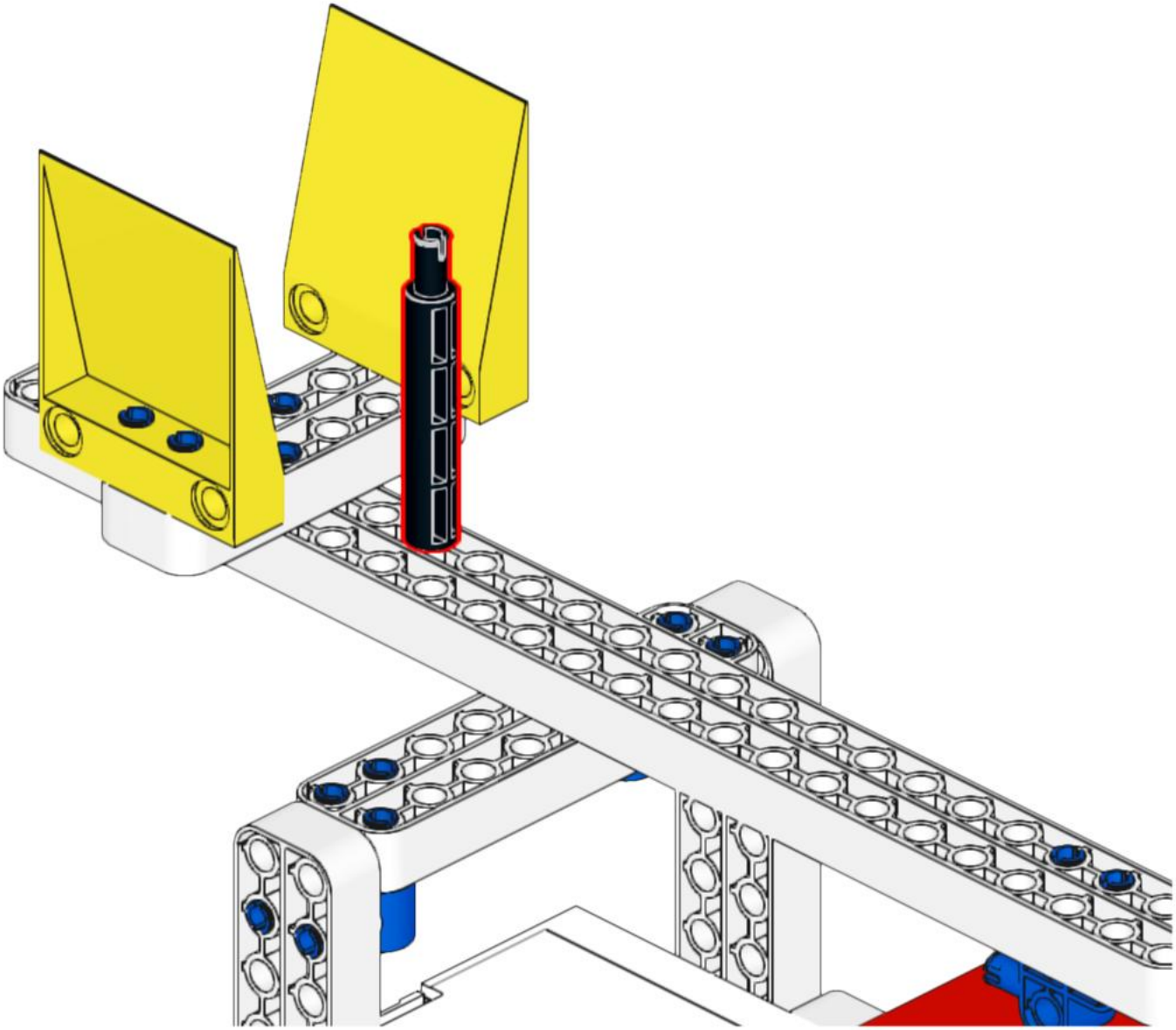

48

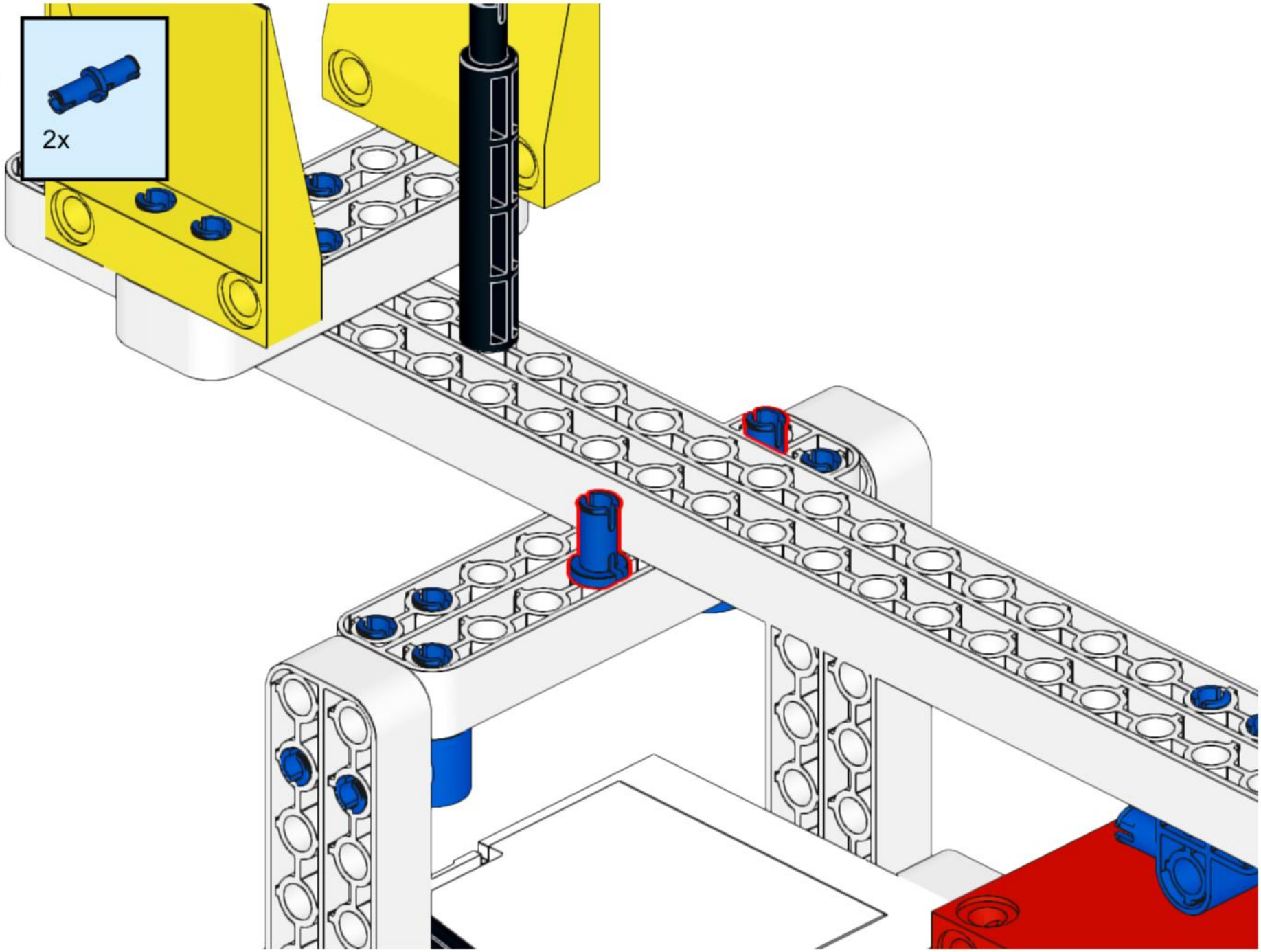

49

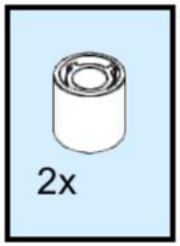

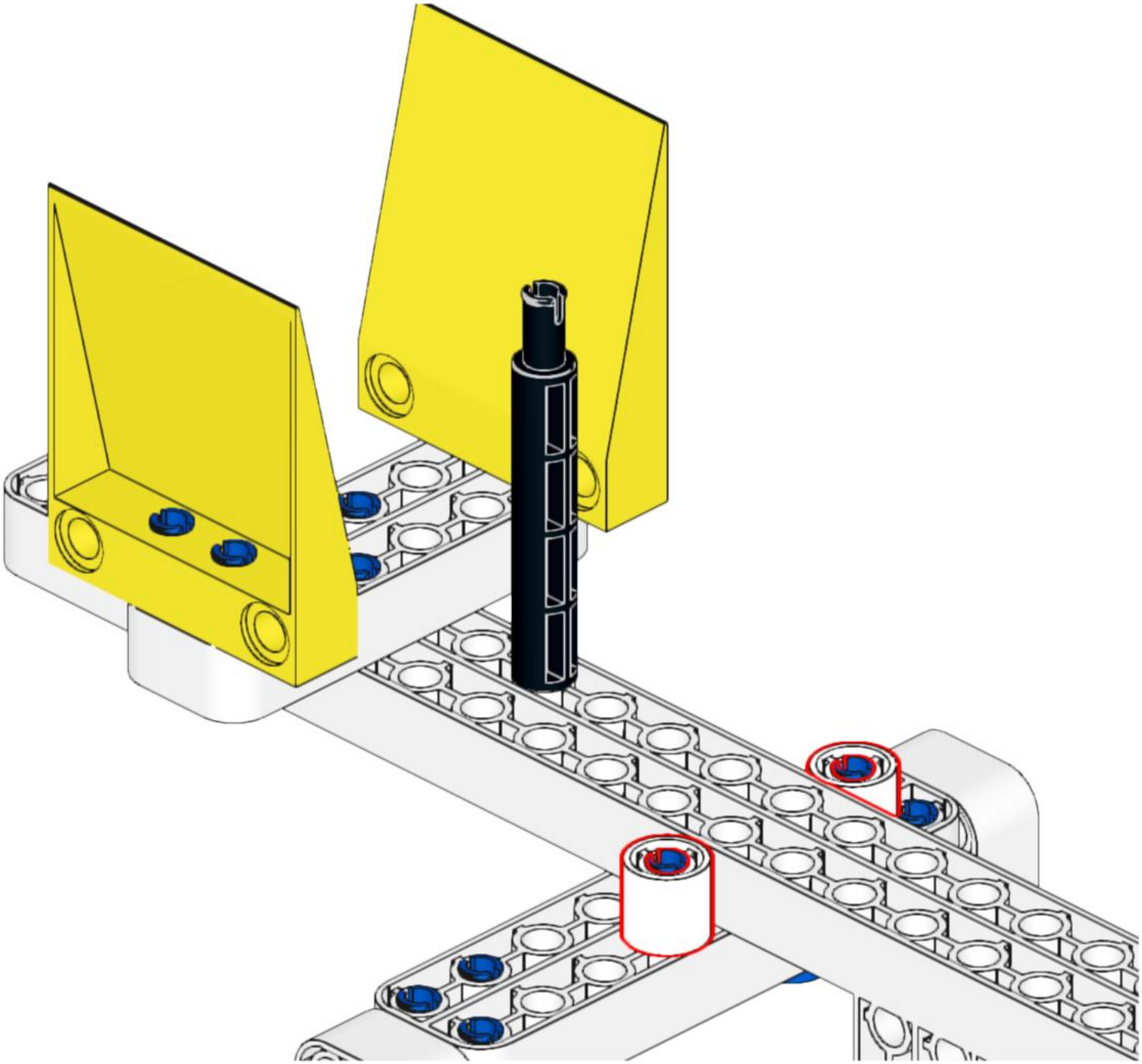

50

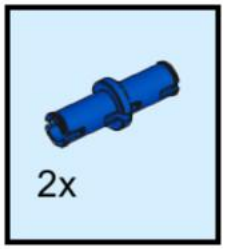

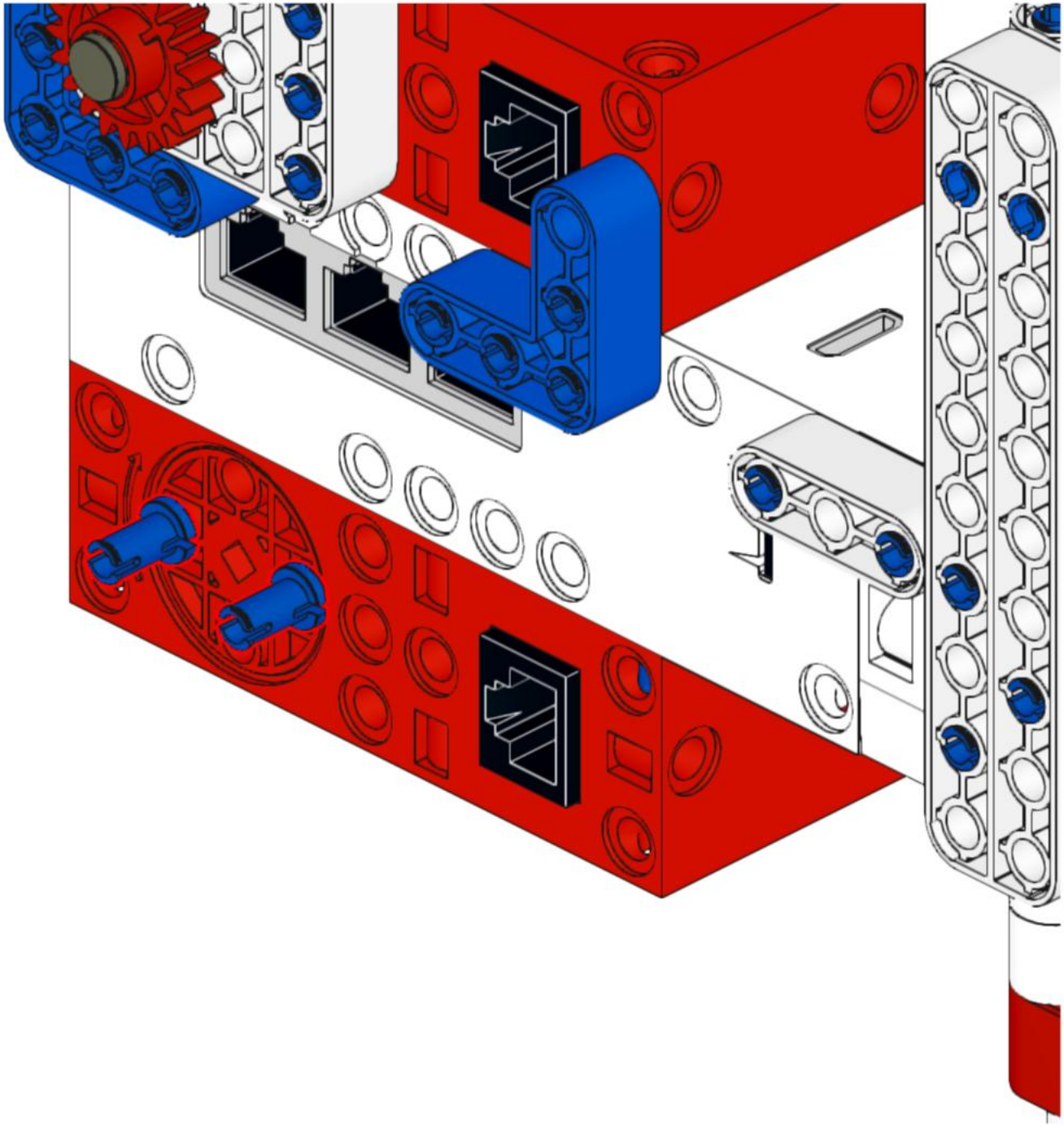

51

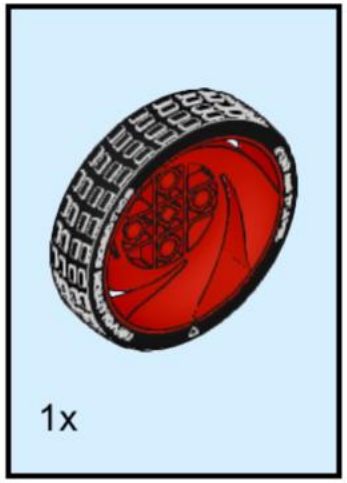

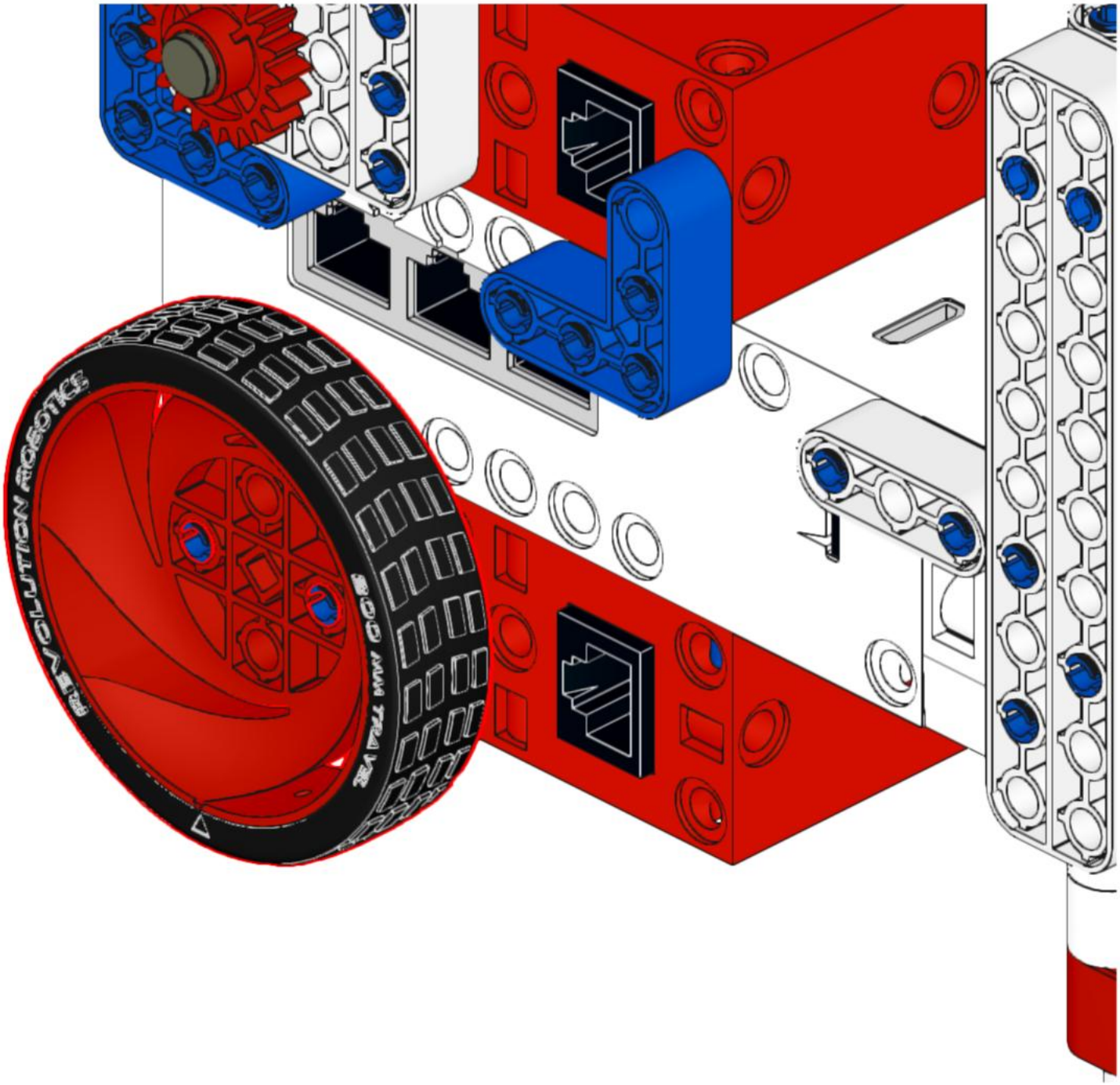

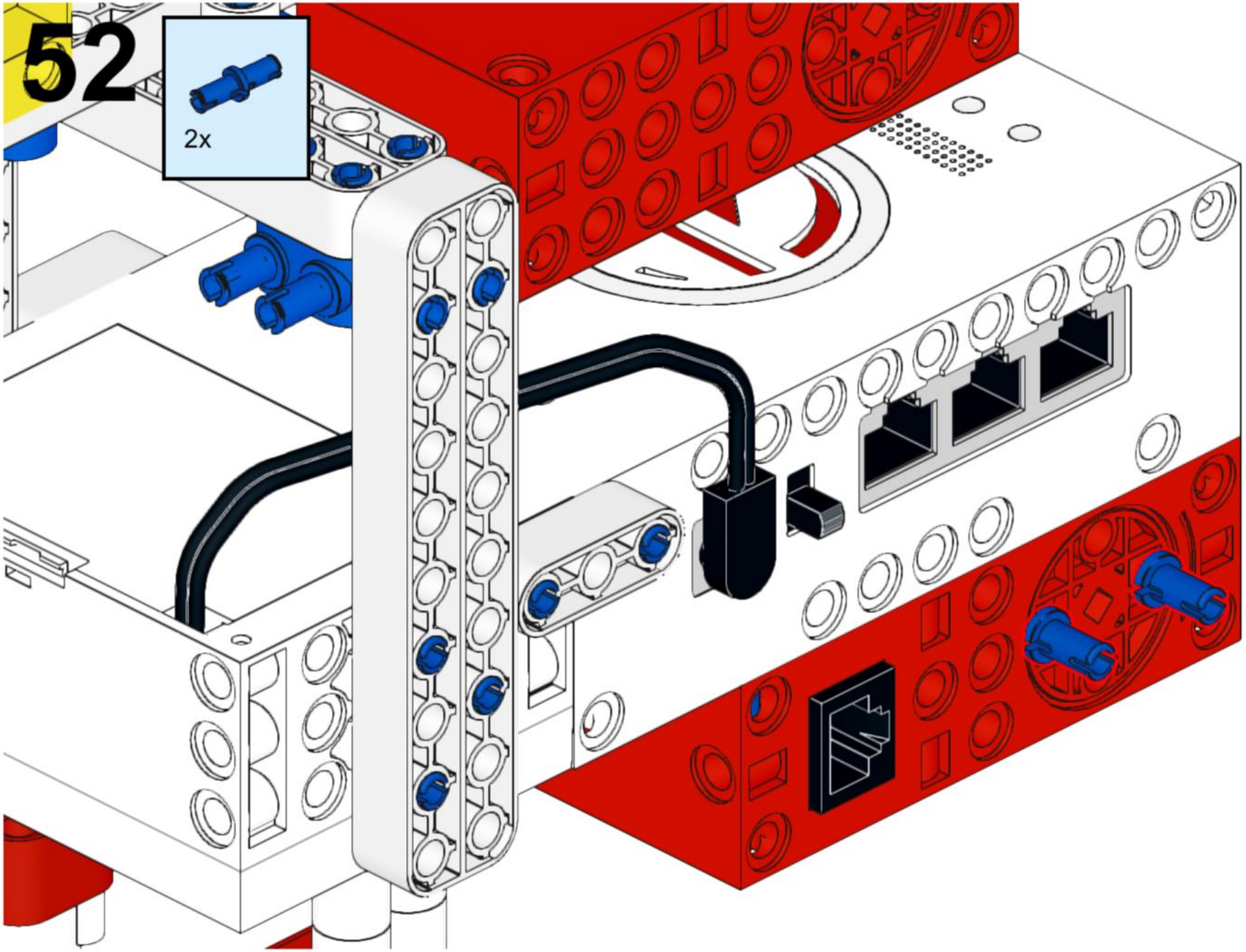
52
2x

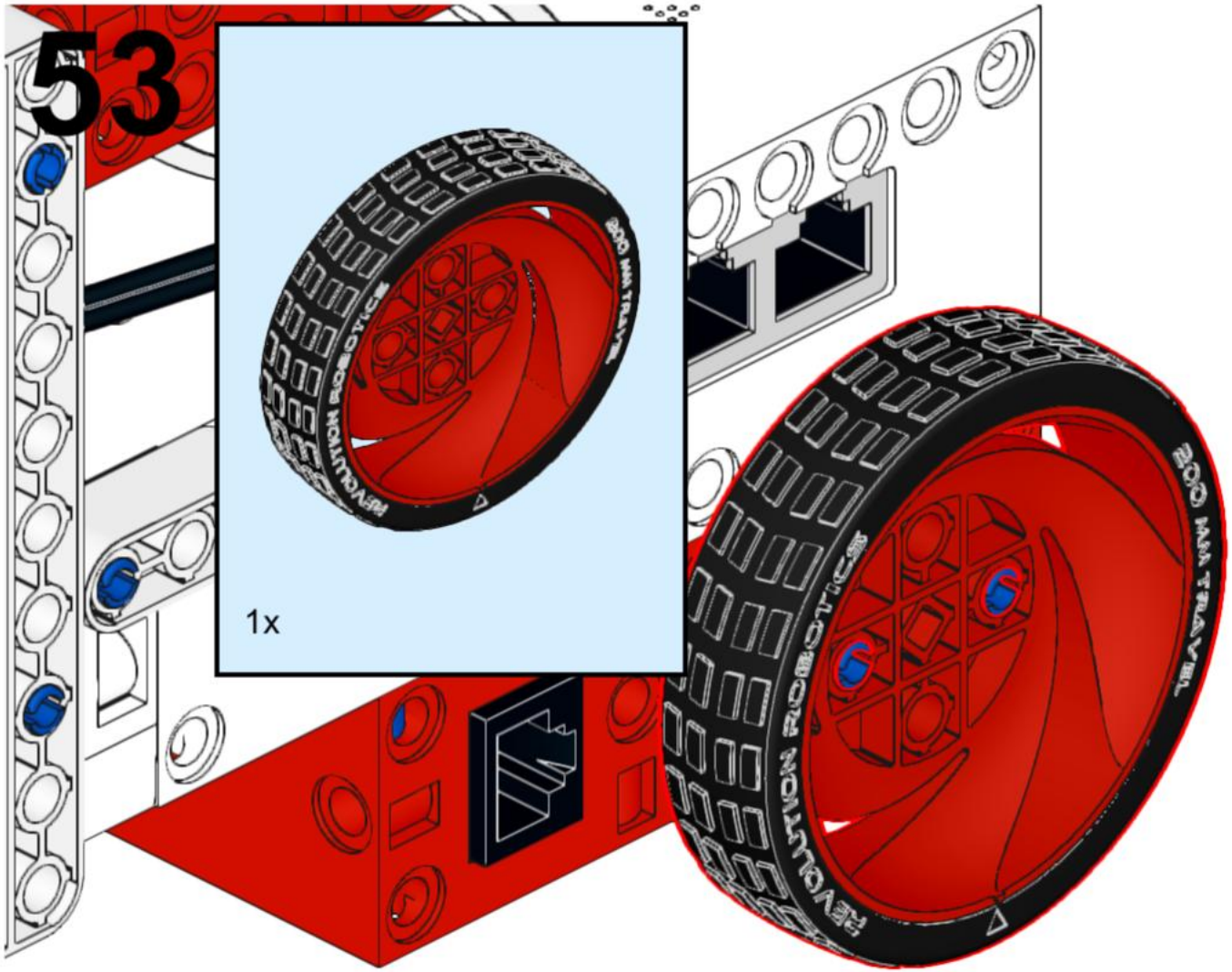
53
1x
200 MM TRAVEL
REVOLUTION ROBOTICS

54

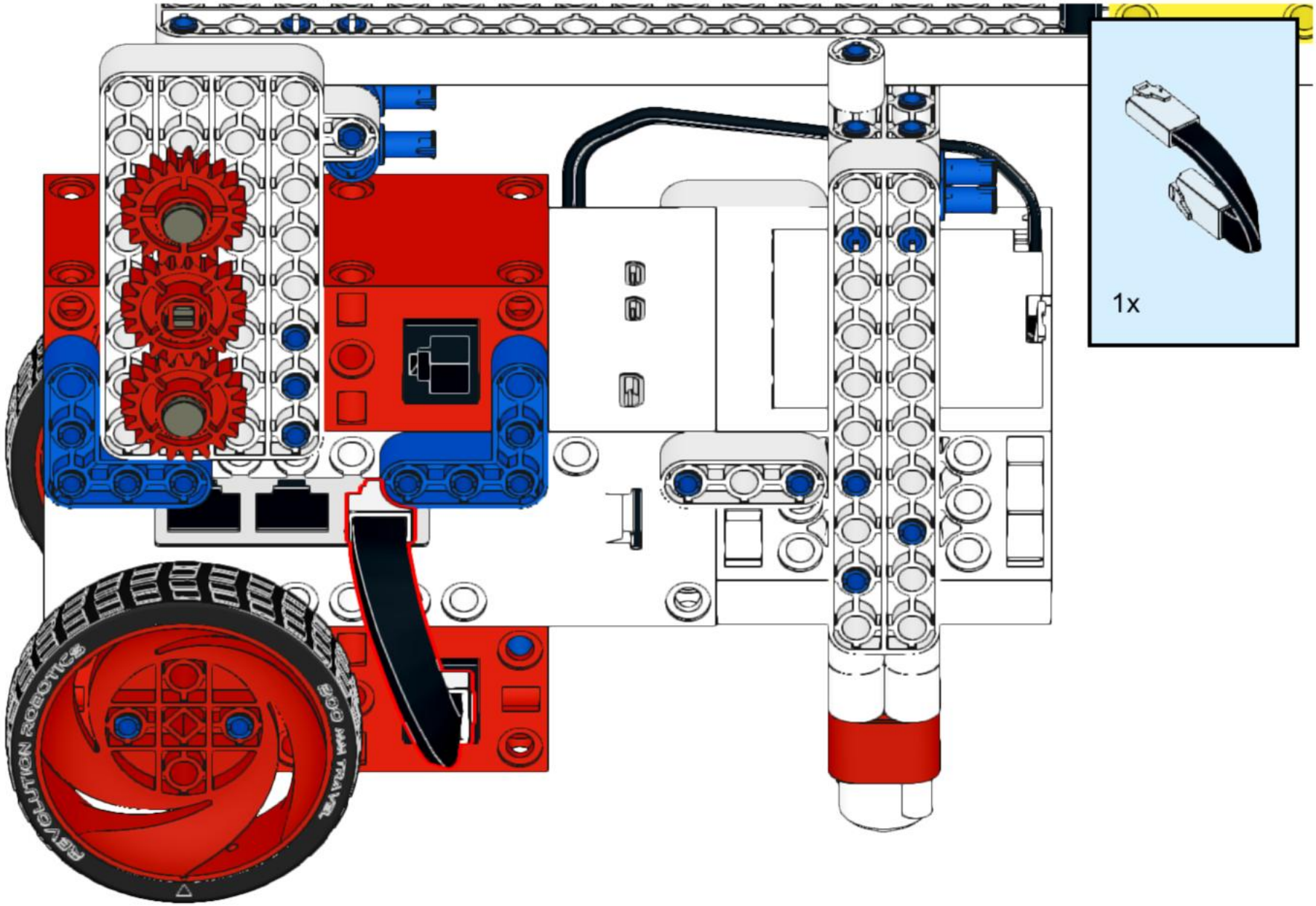

55

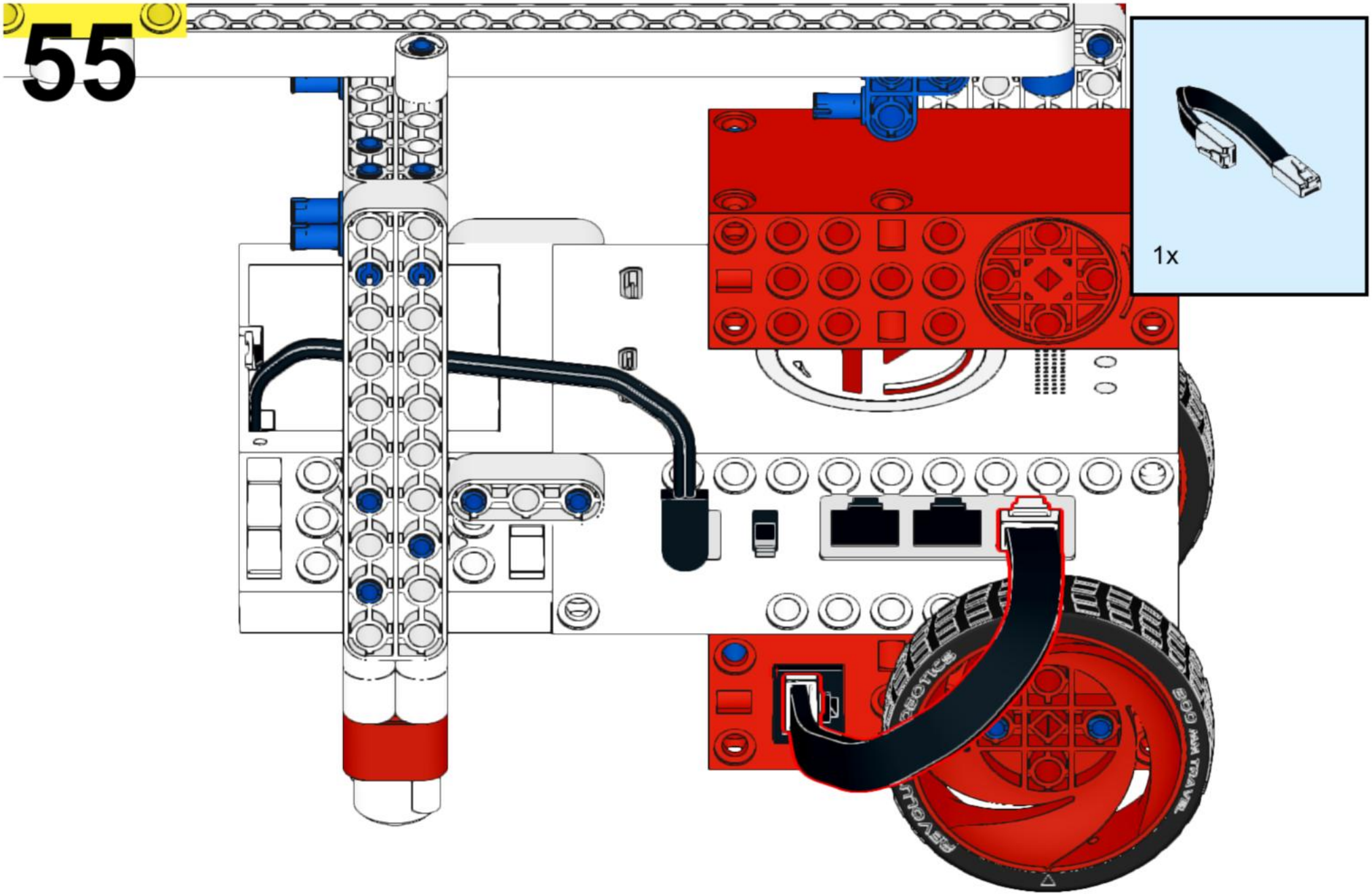

56

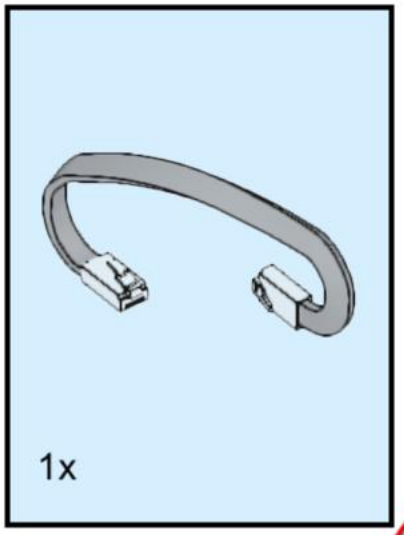

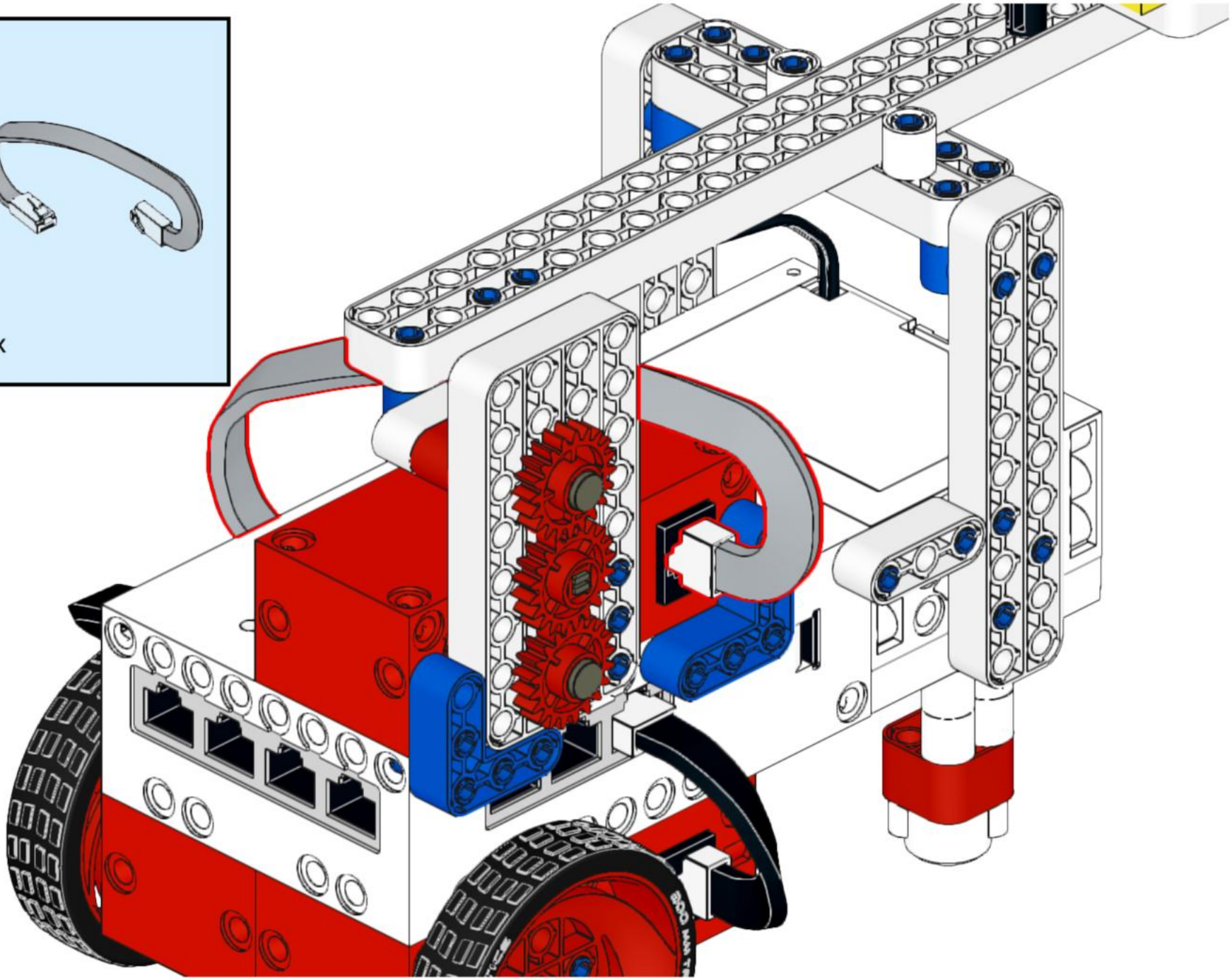
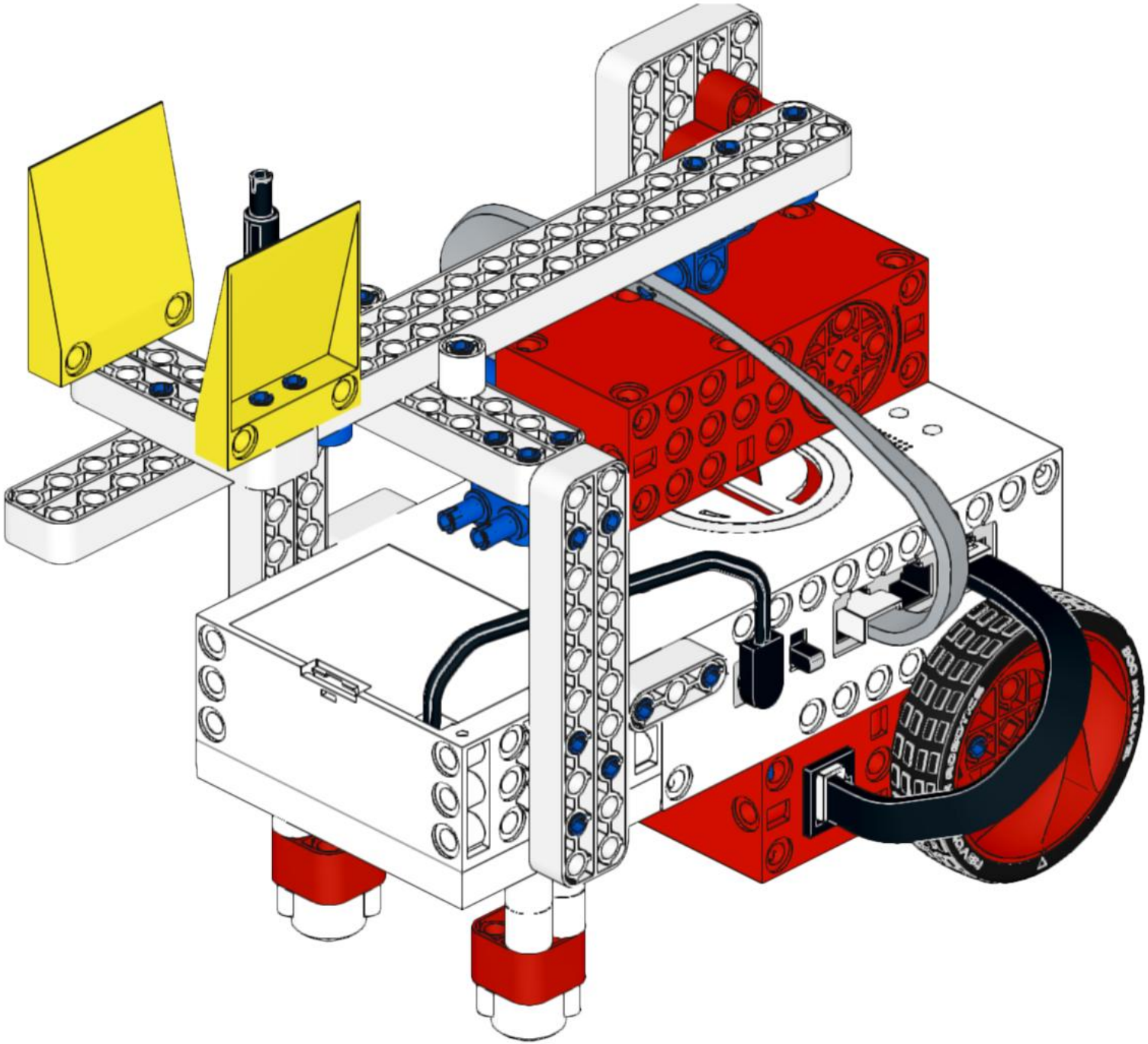
57