1

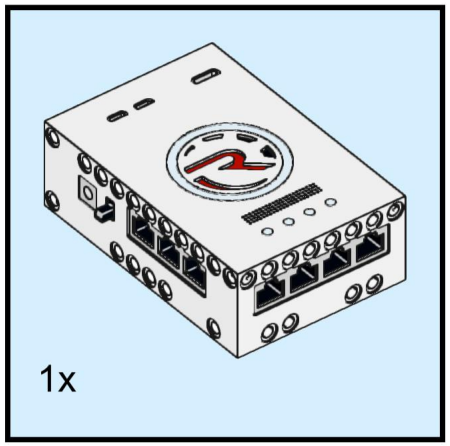

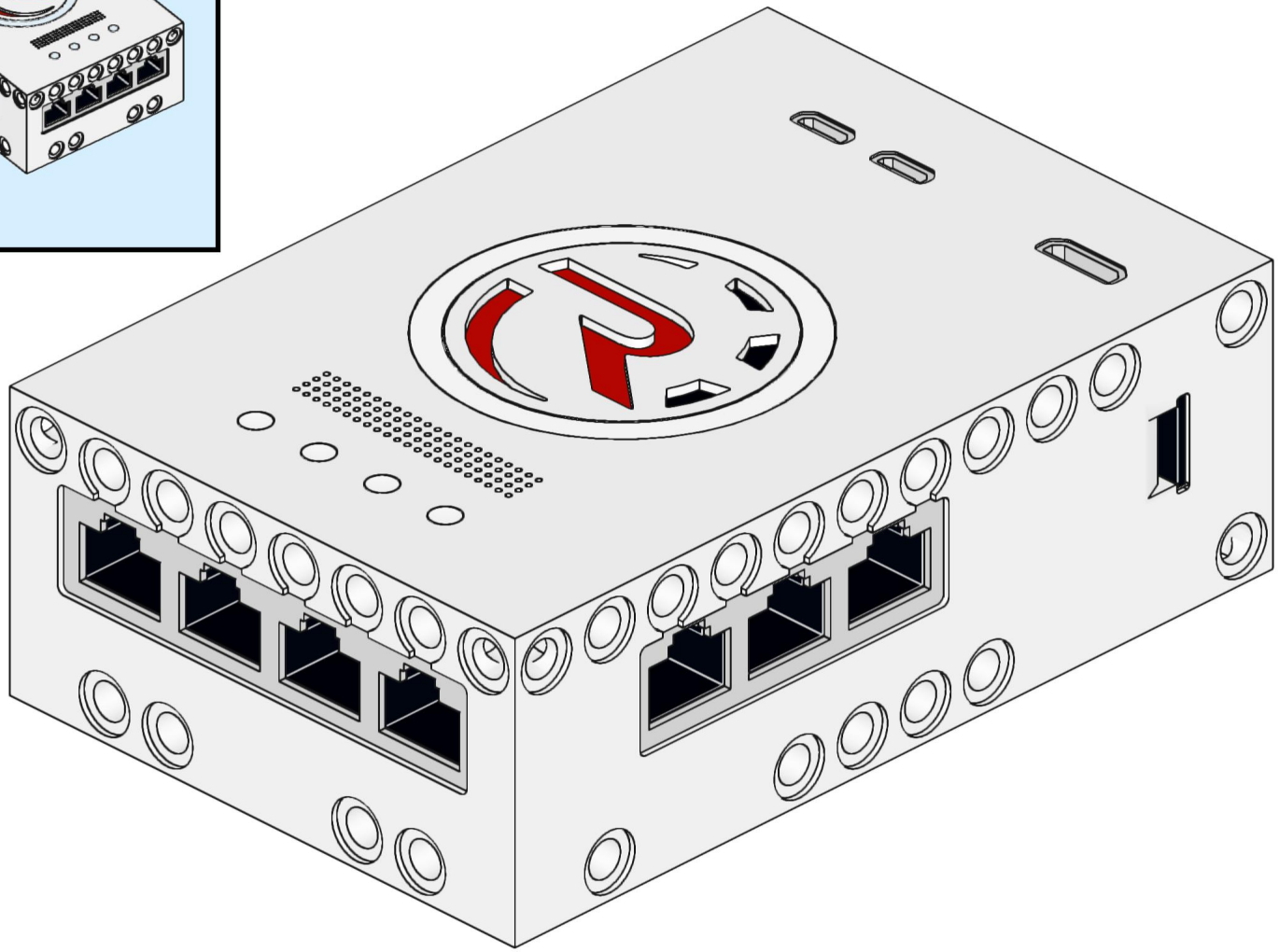

2

4x

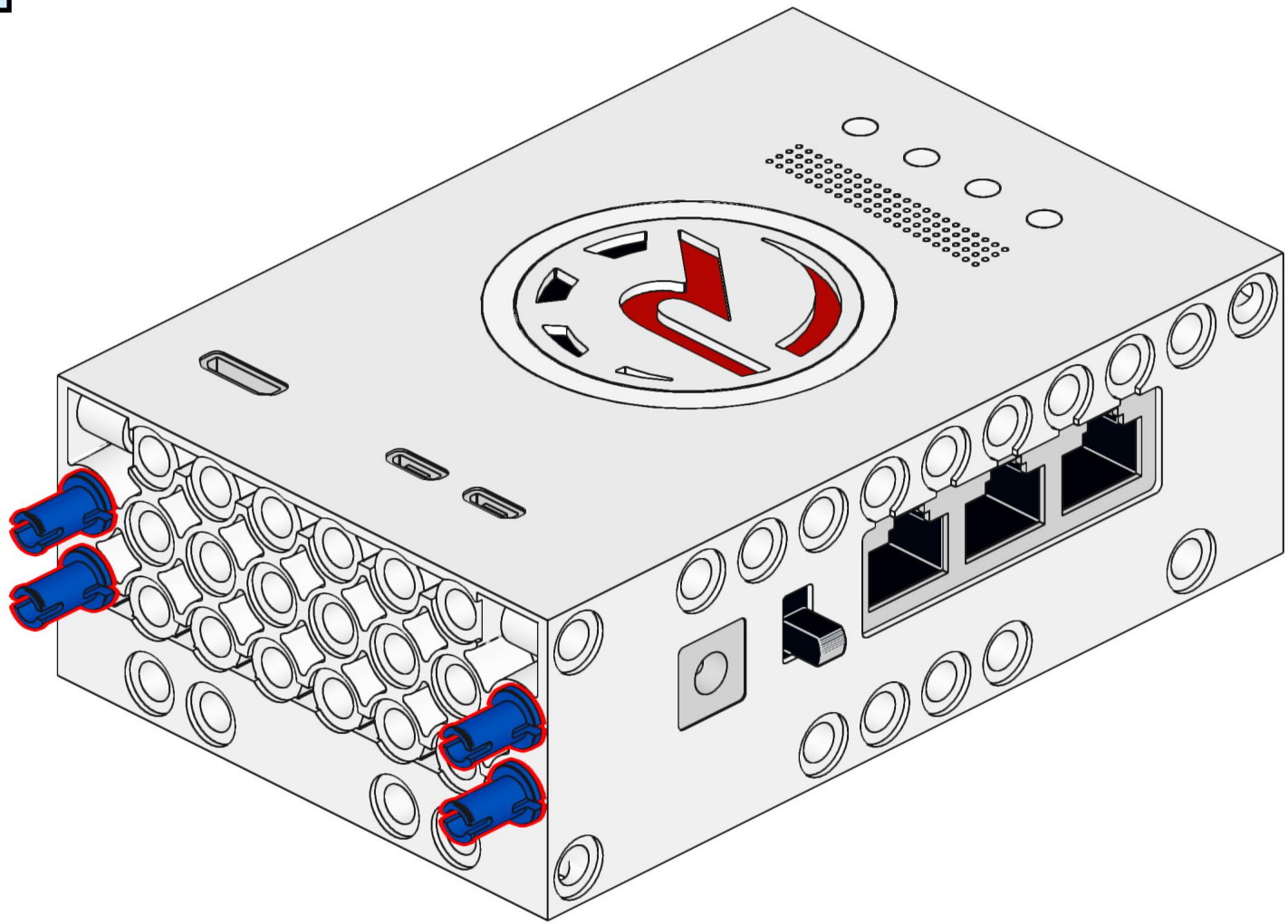

3

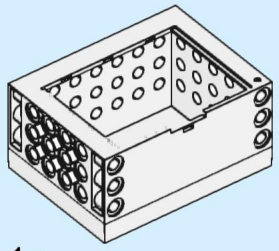

1x

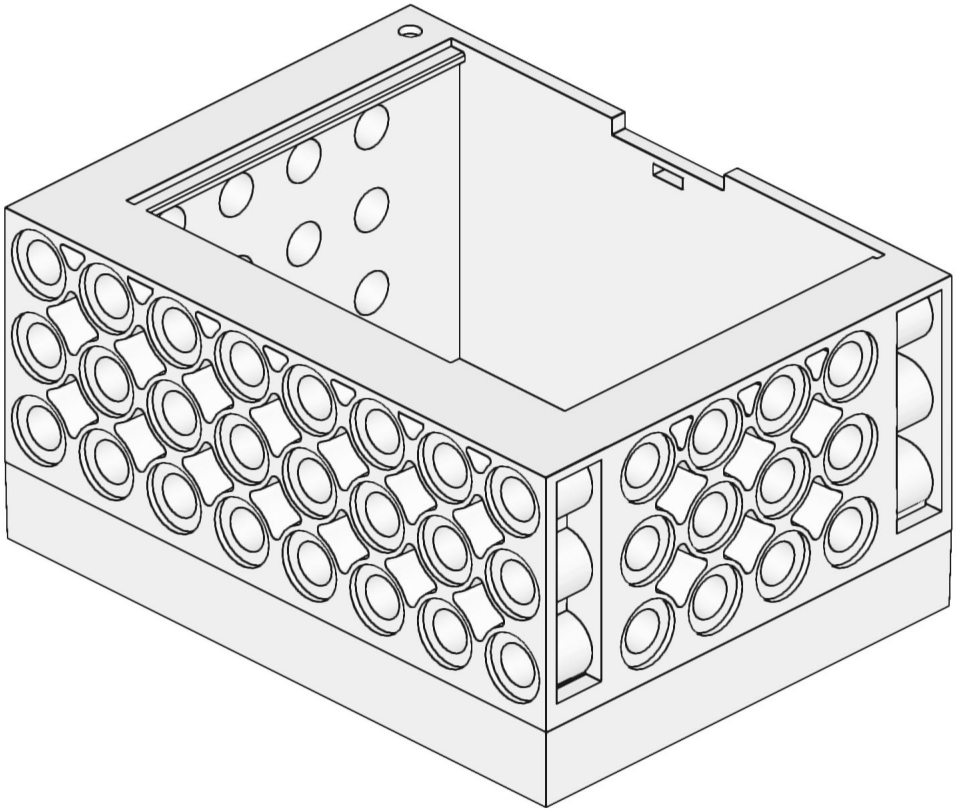

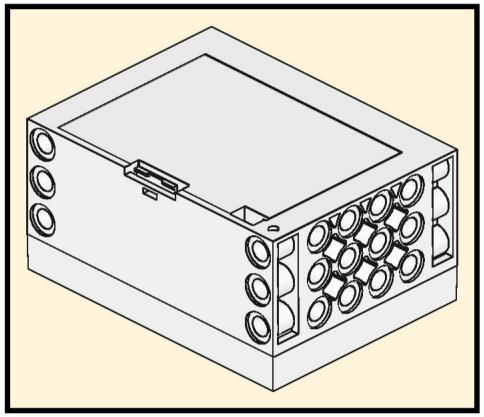

4

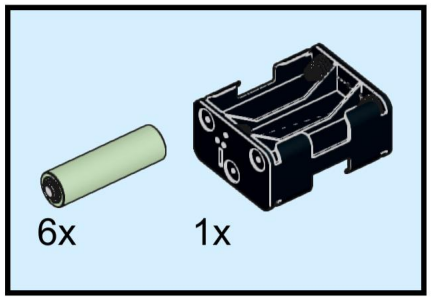

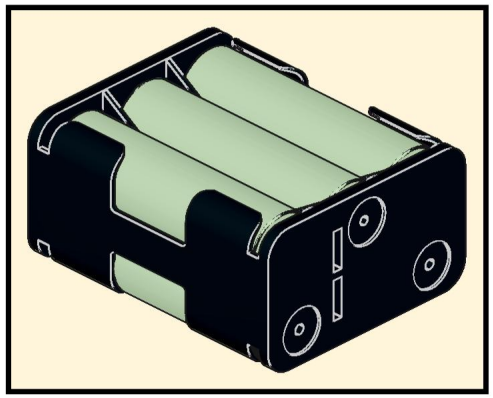

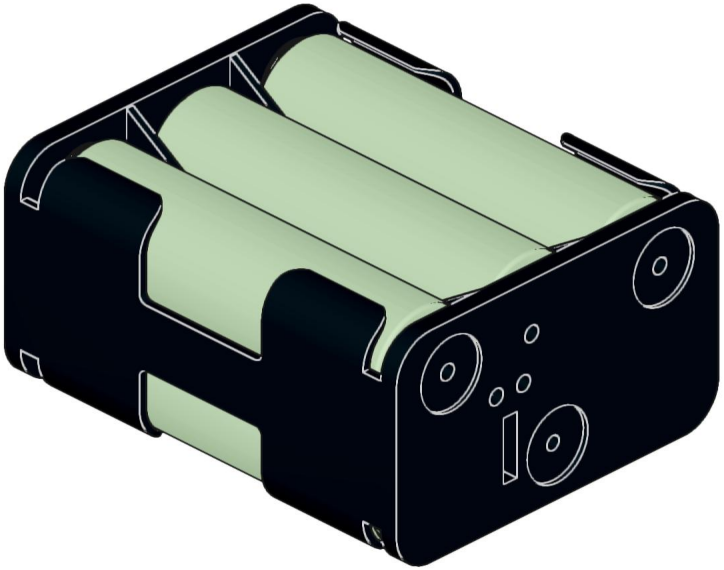

5

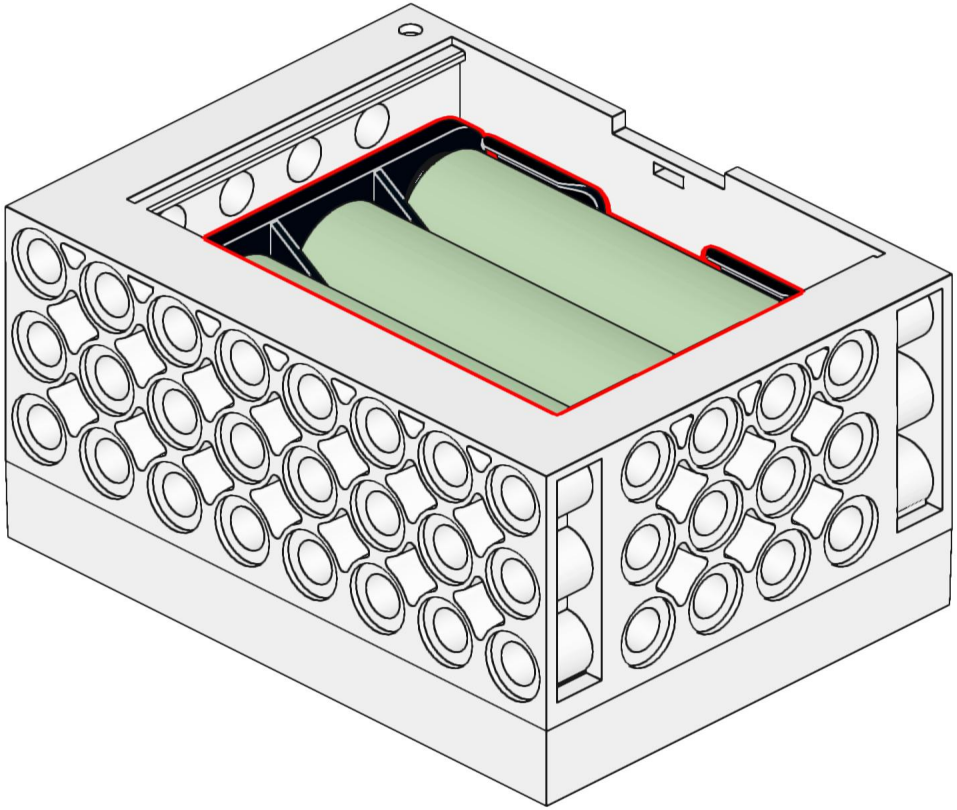

6

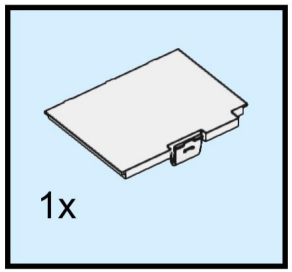

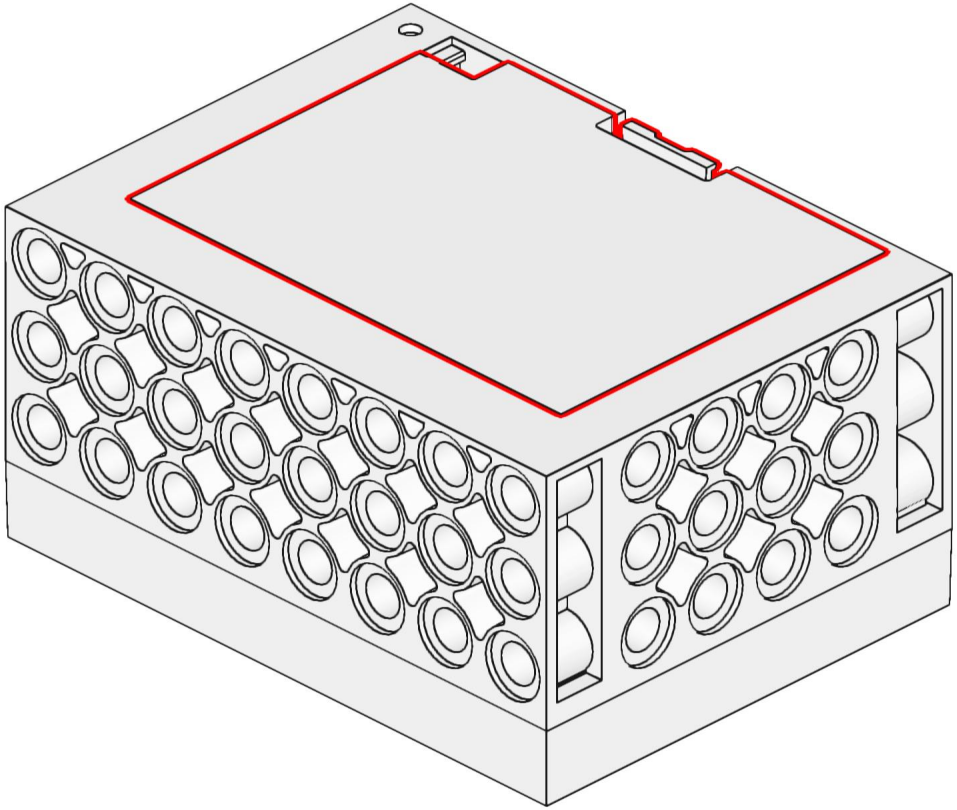

7

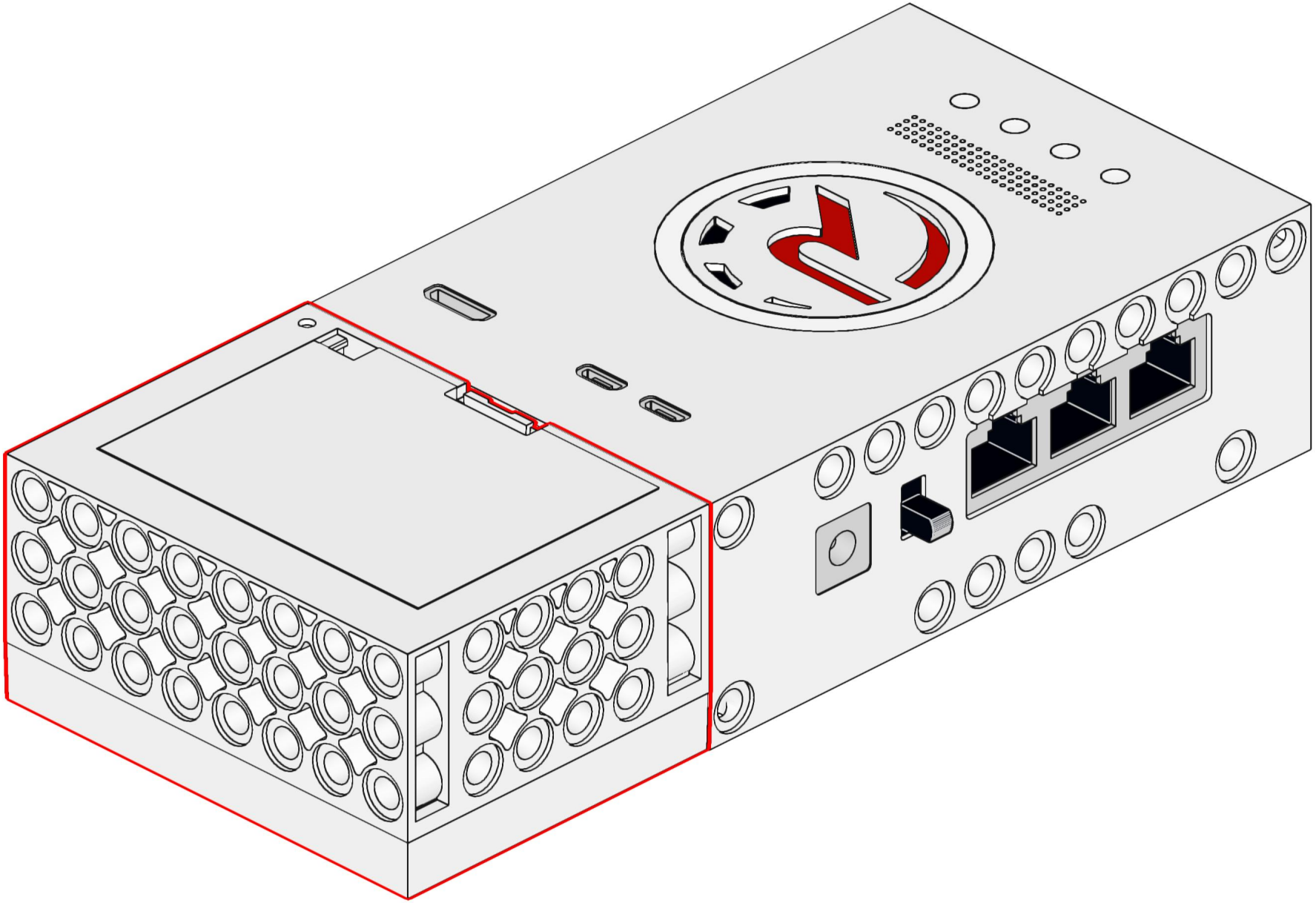

8

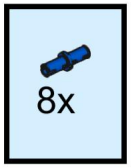

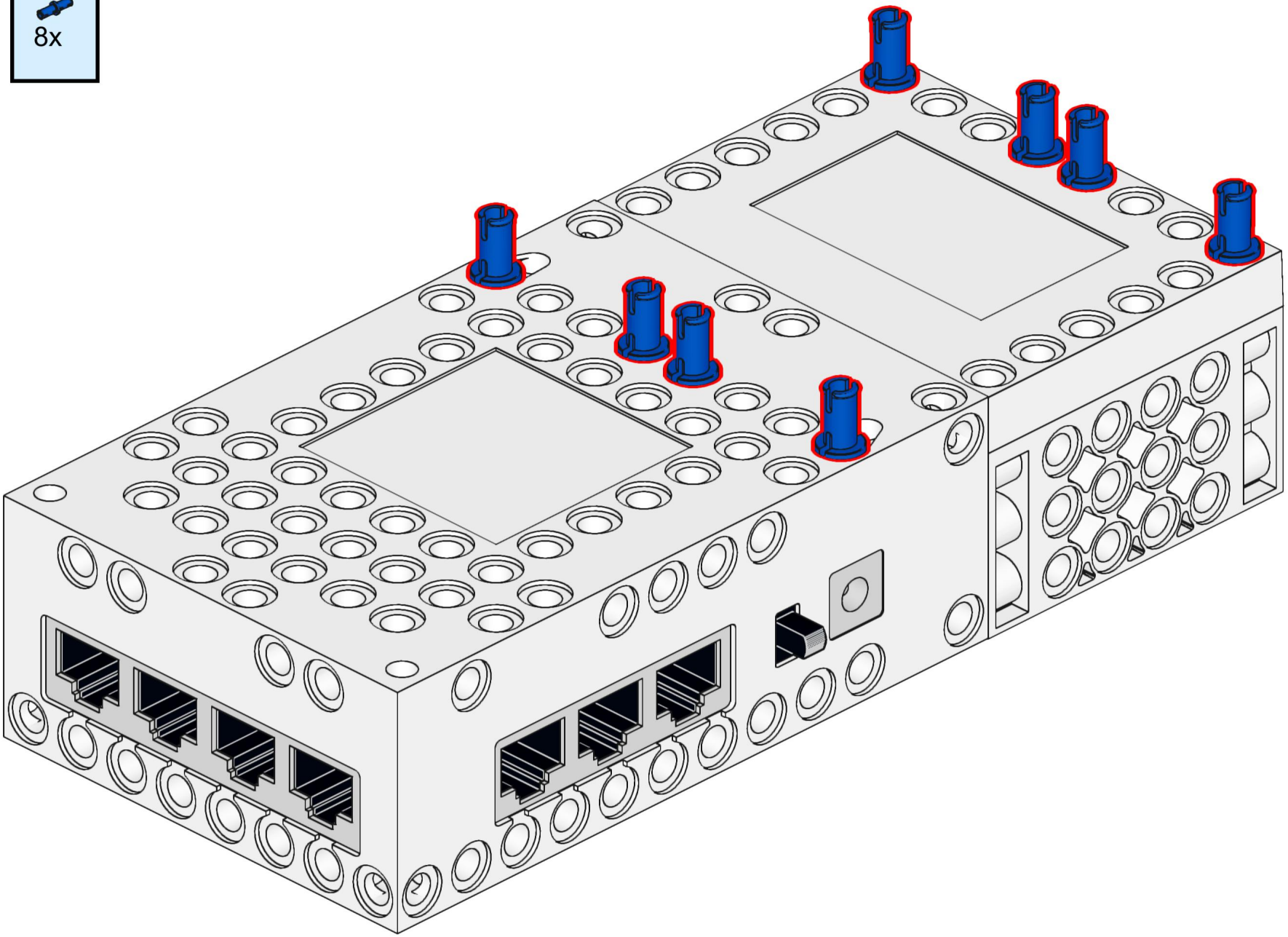

9

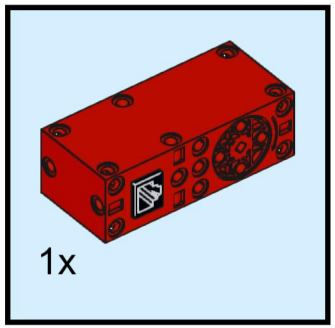

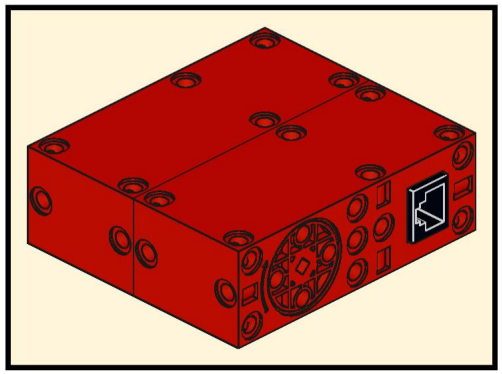

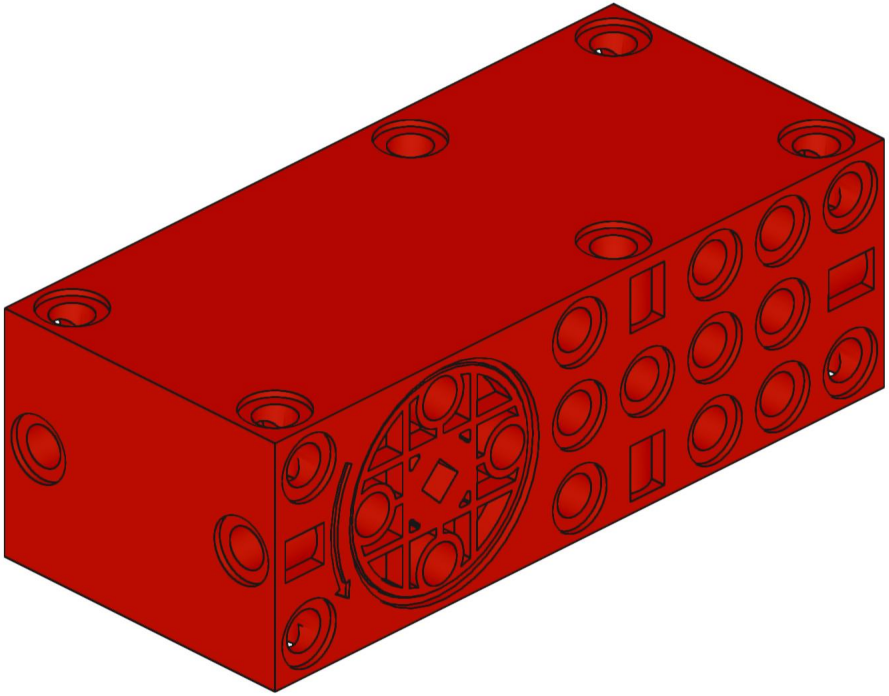

10

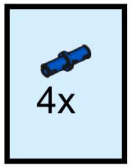

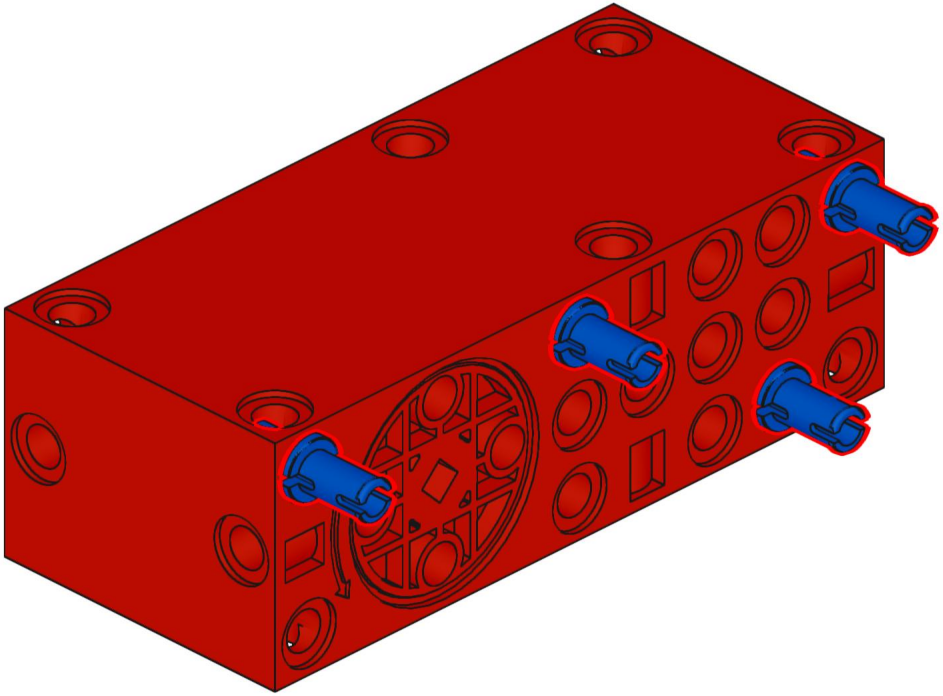

11

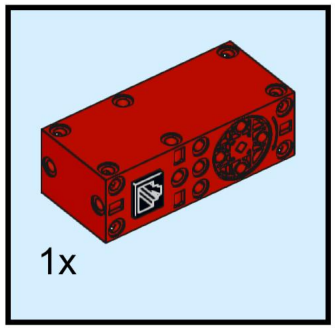

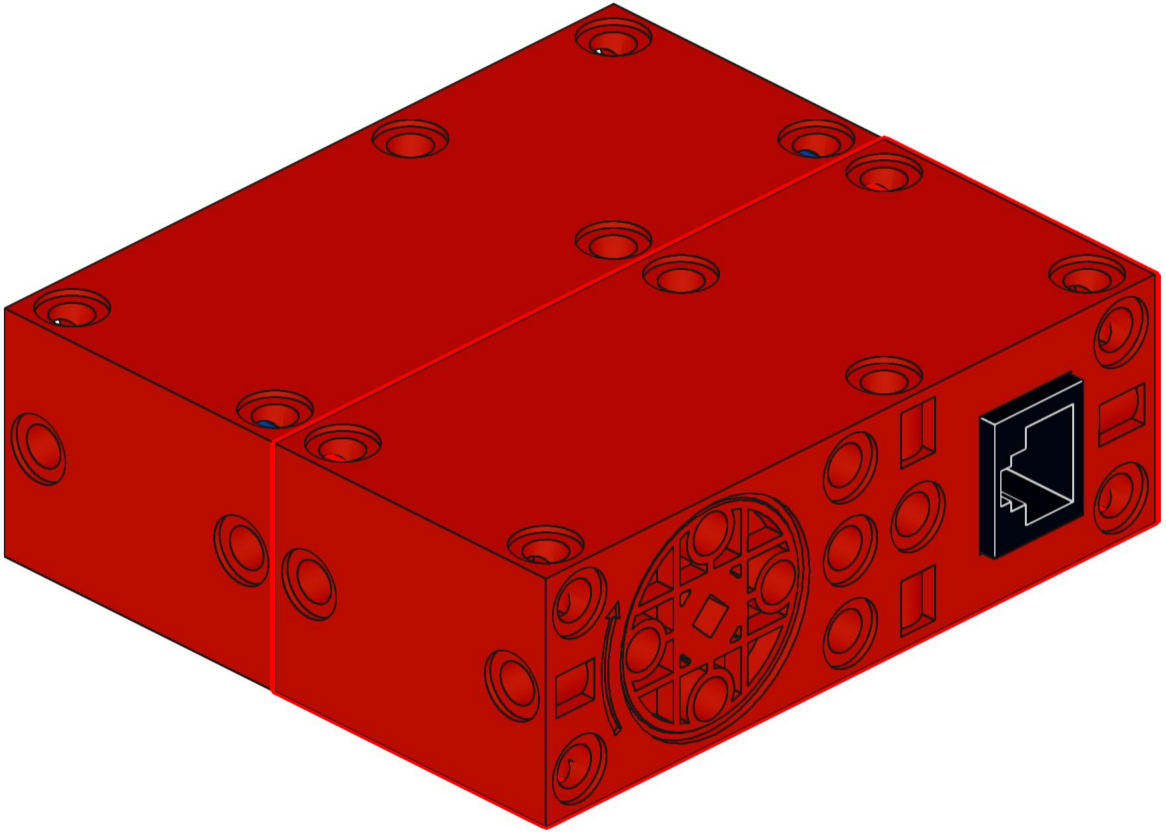

12

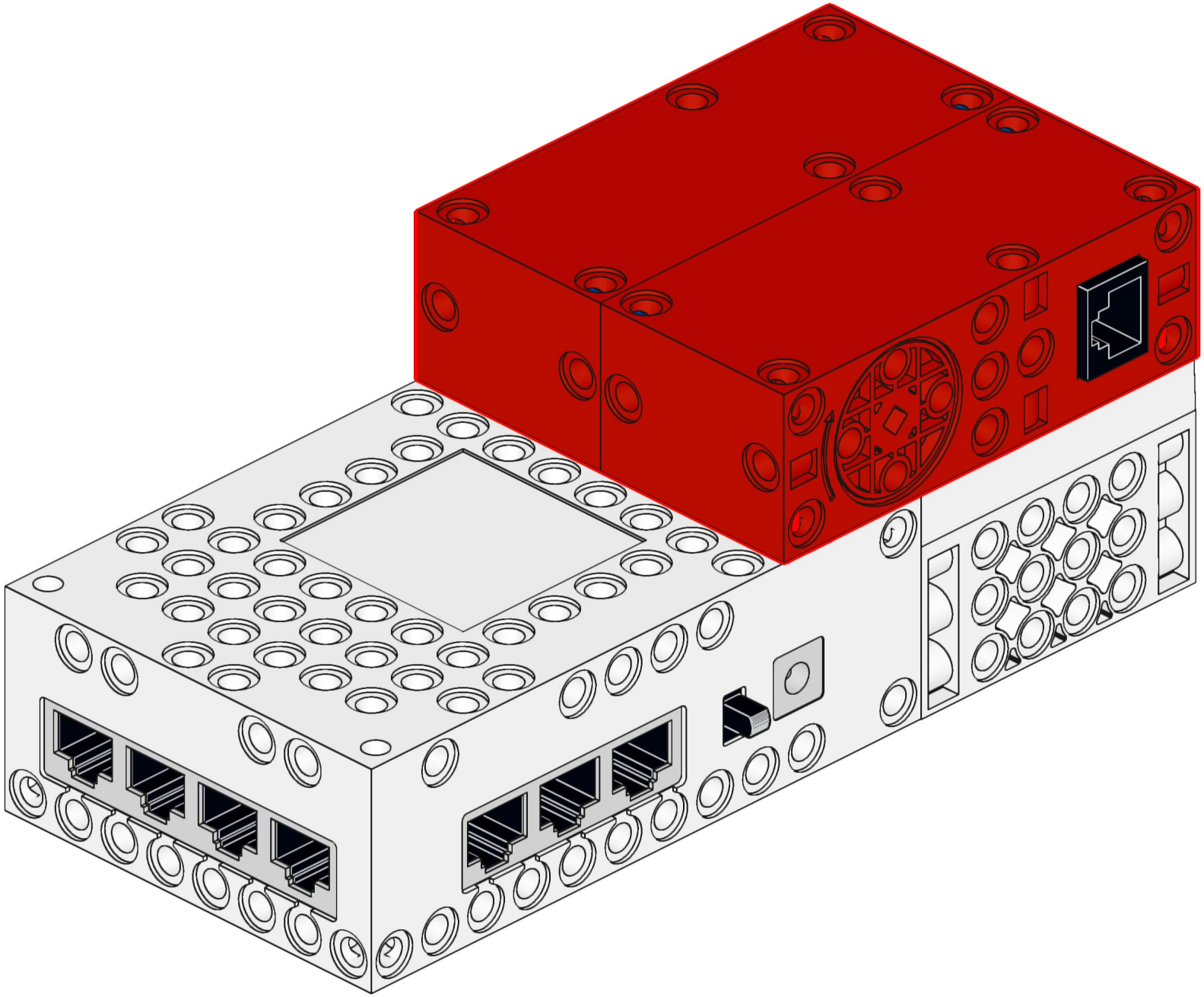

13

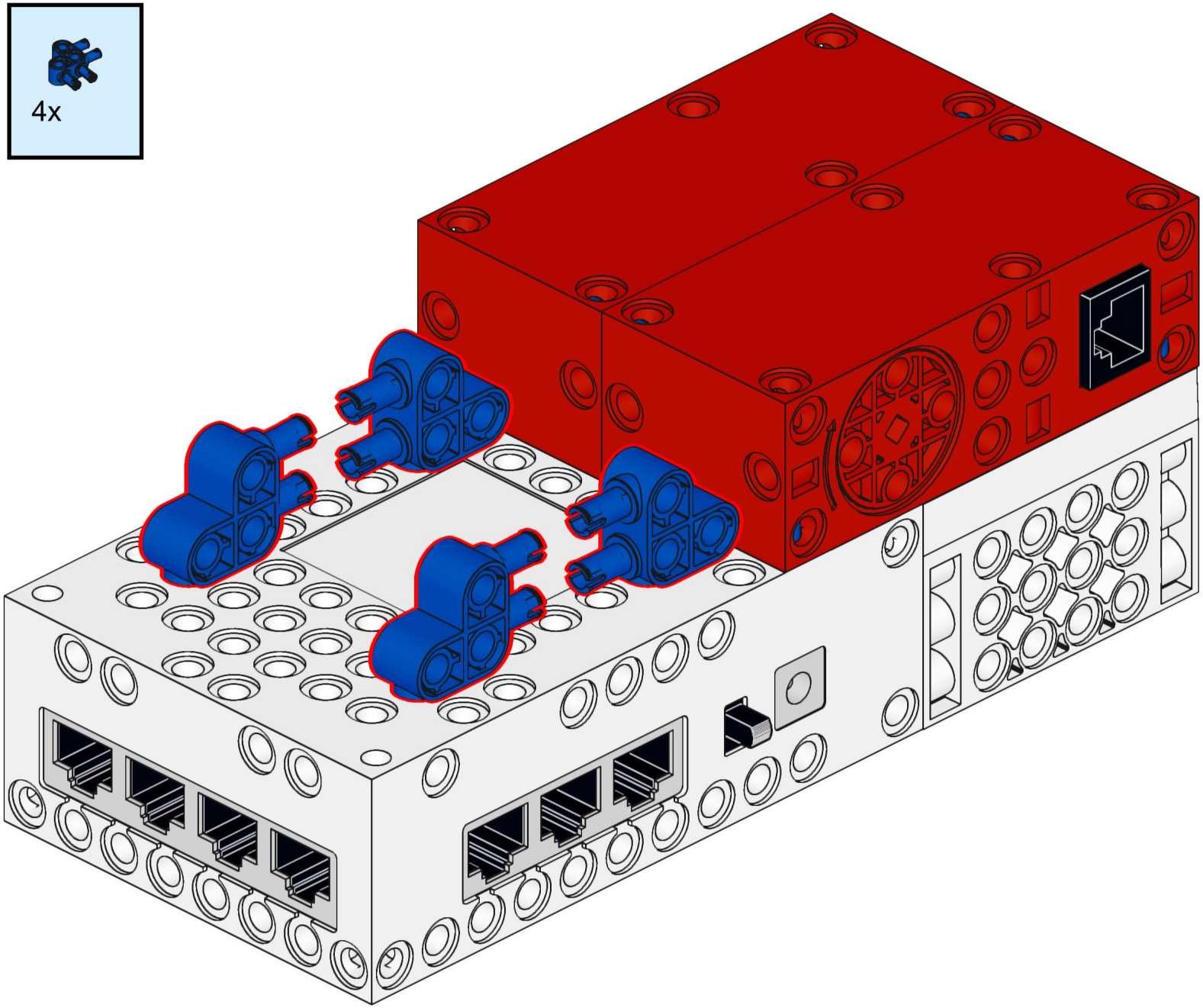

14

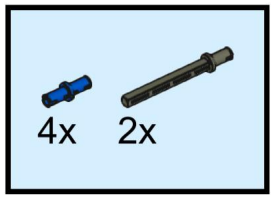

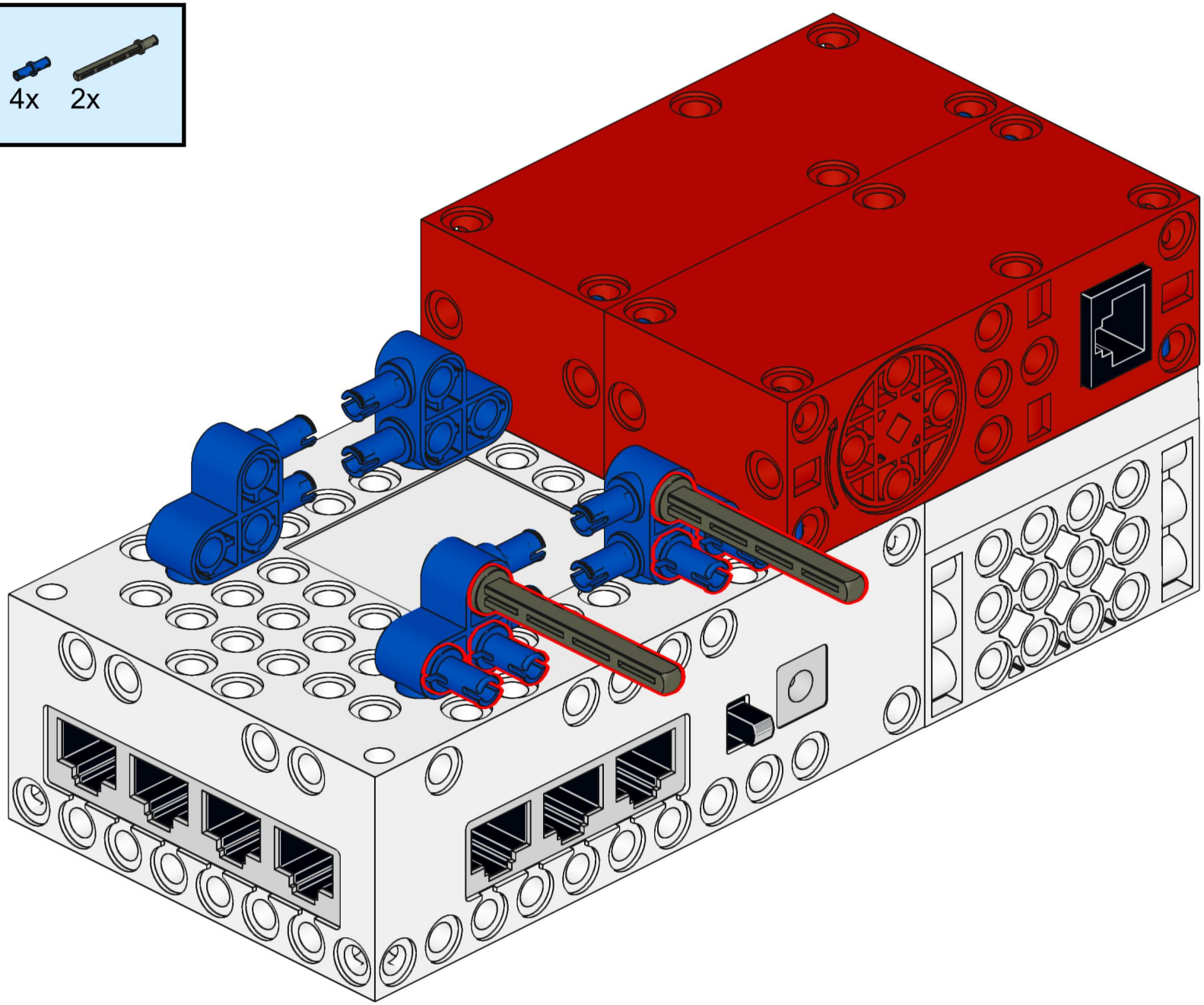

15

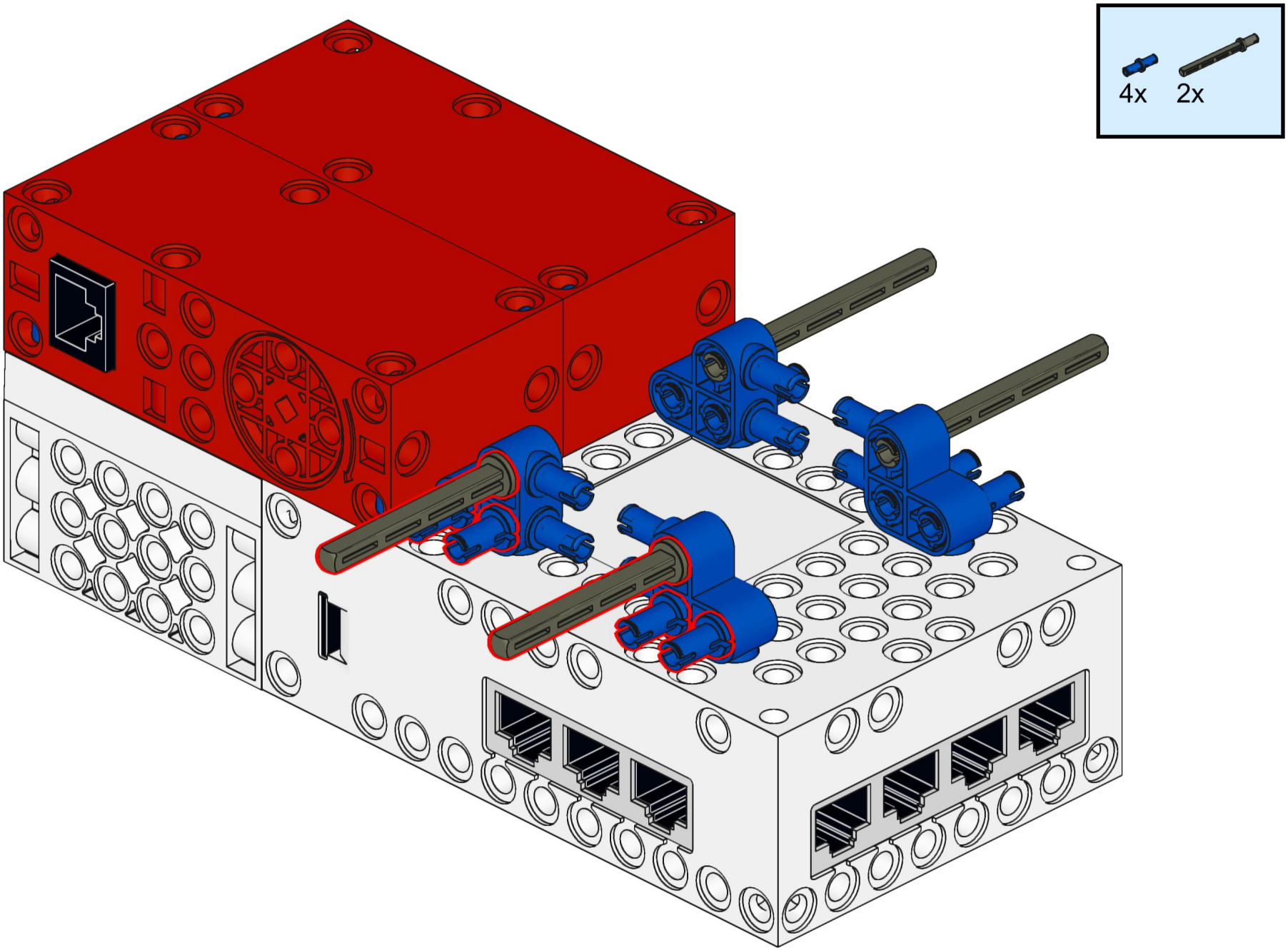

16

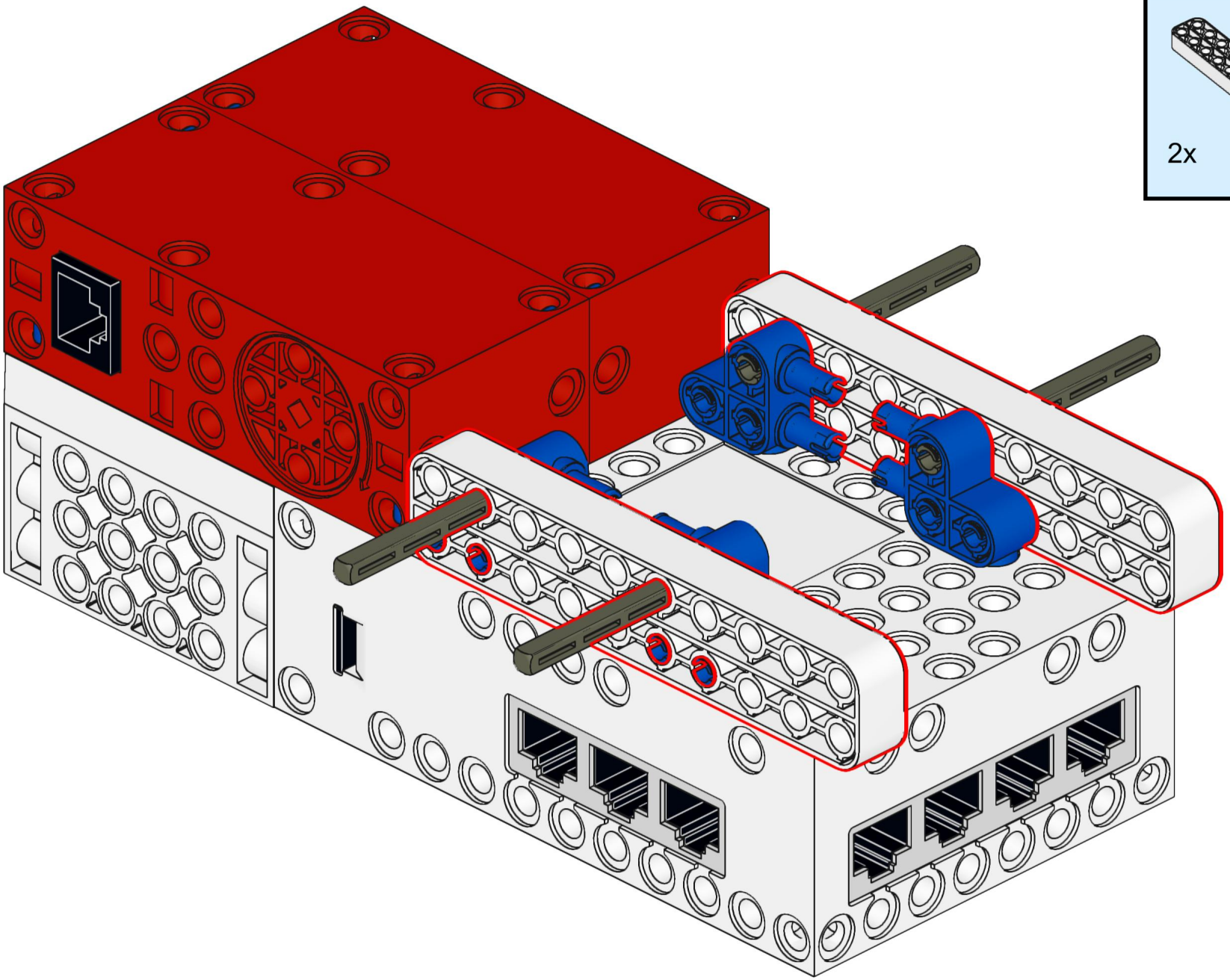

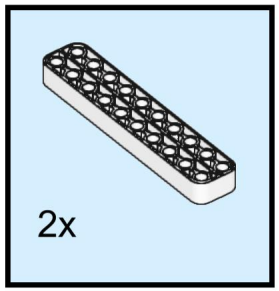

17

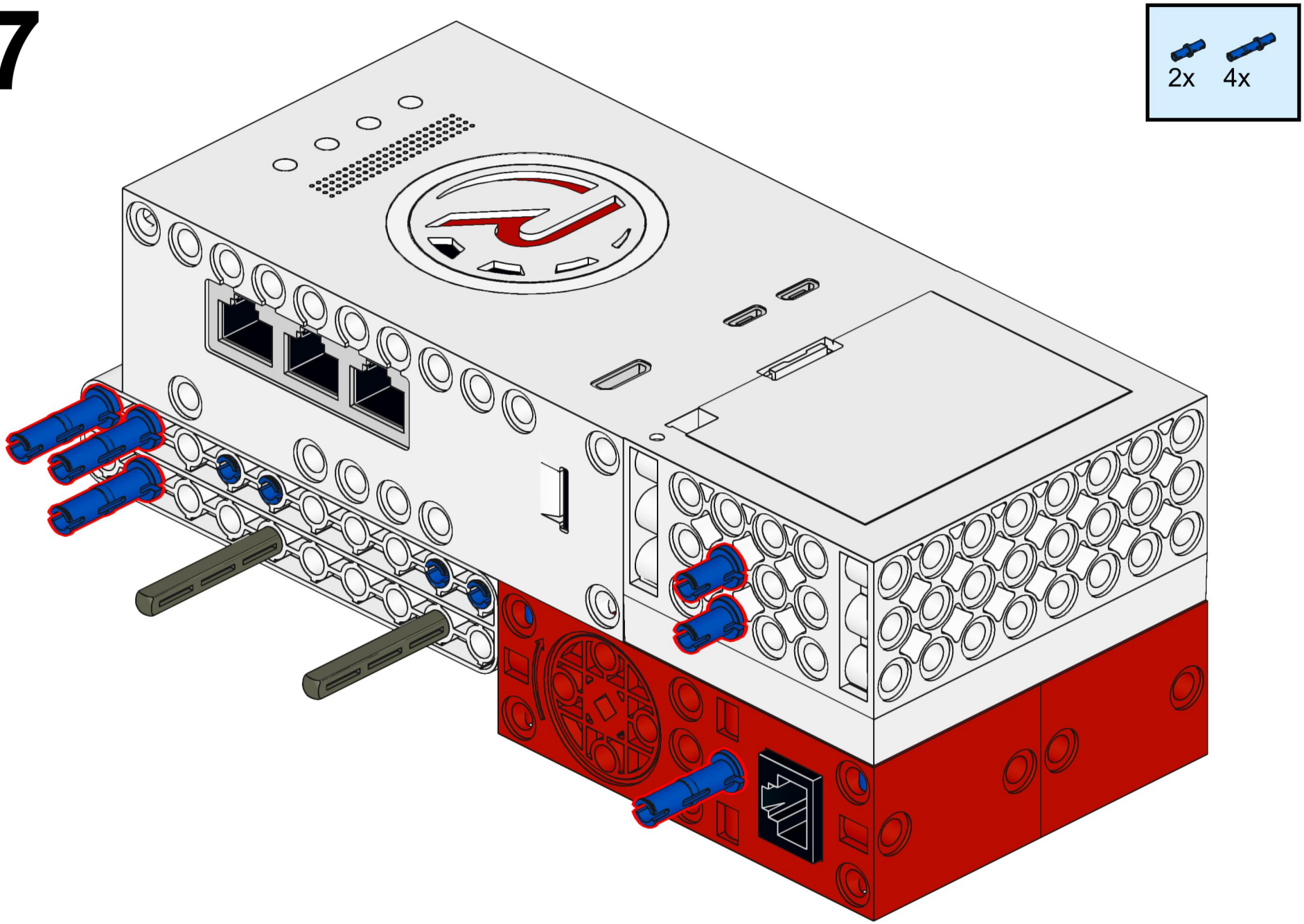

18

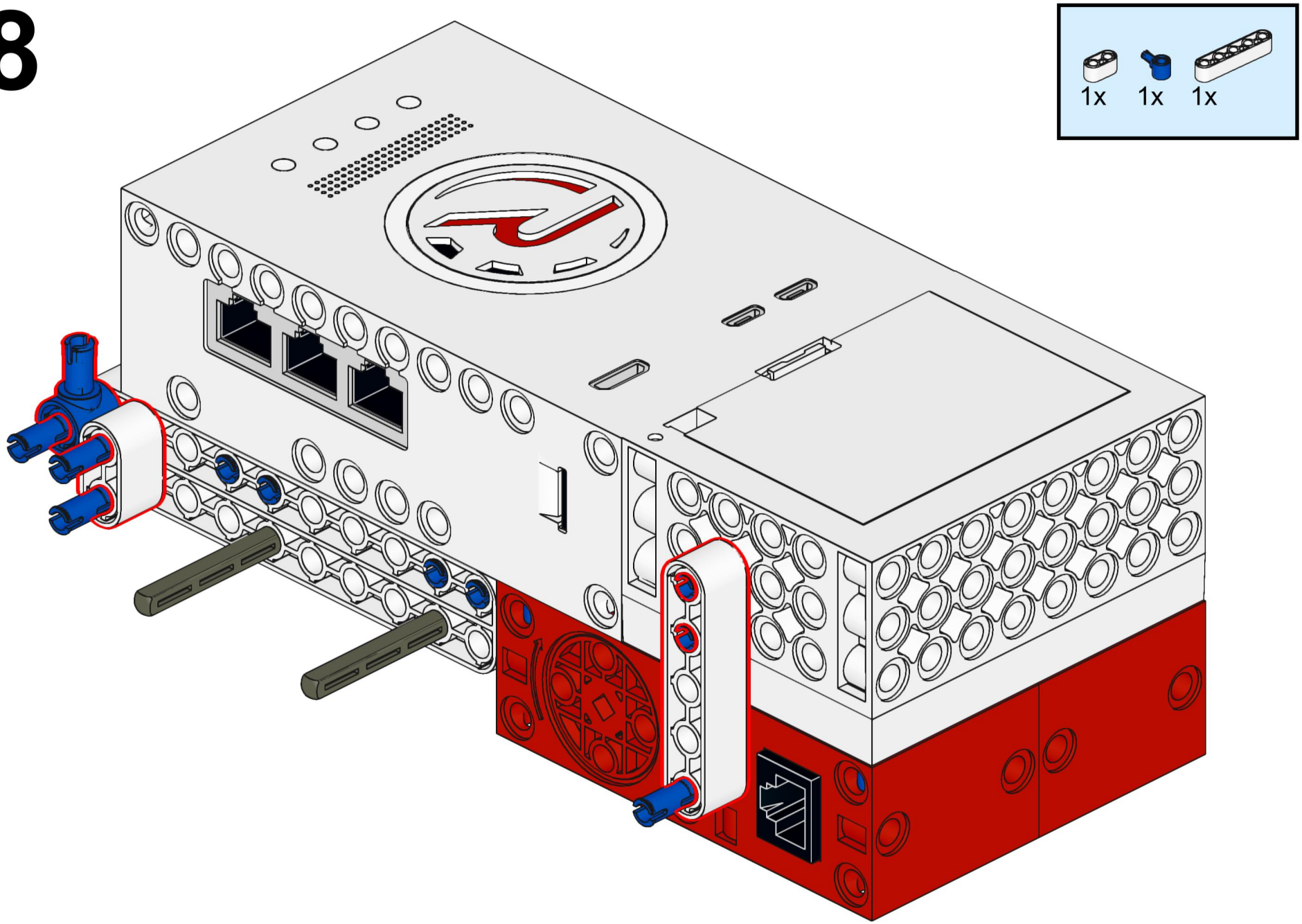

19

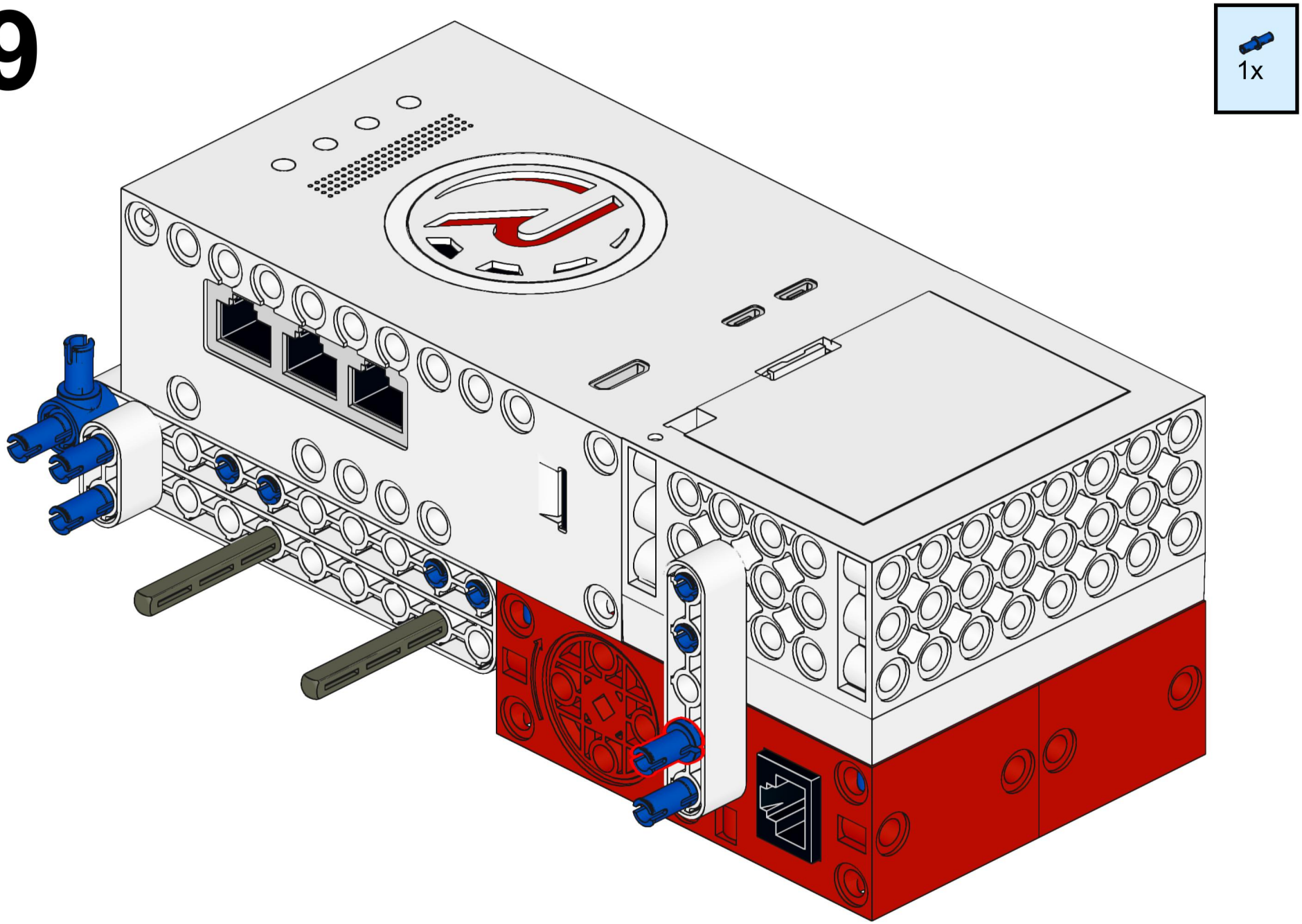

20

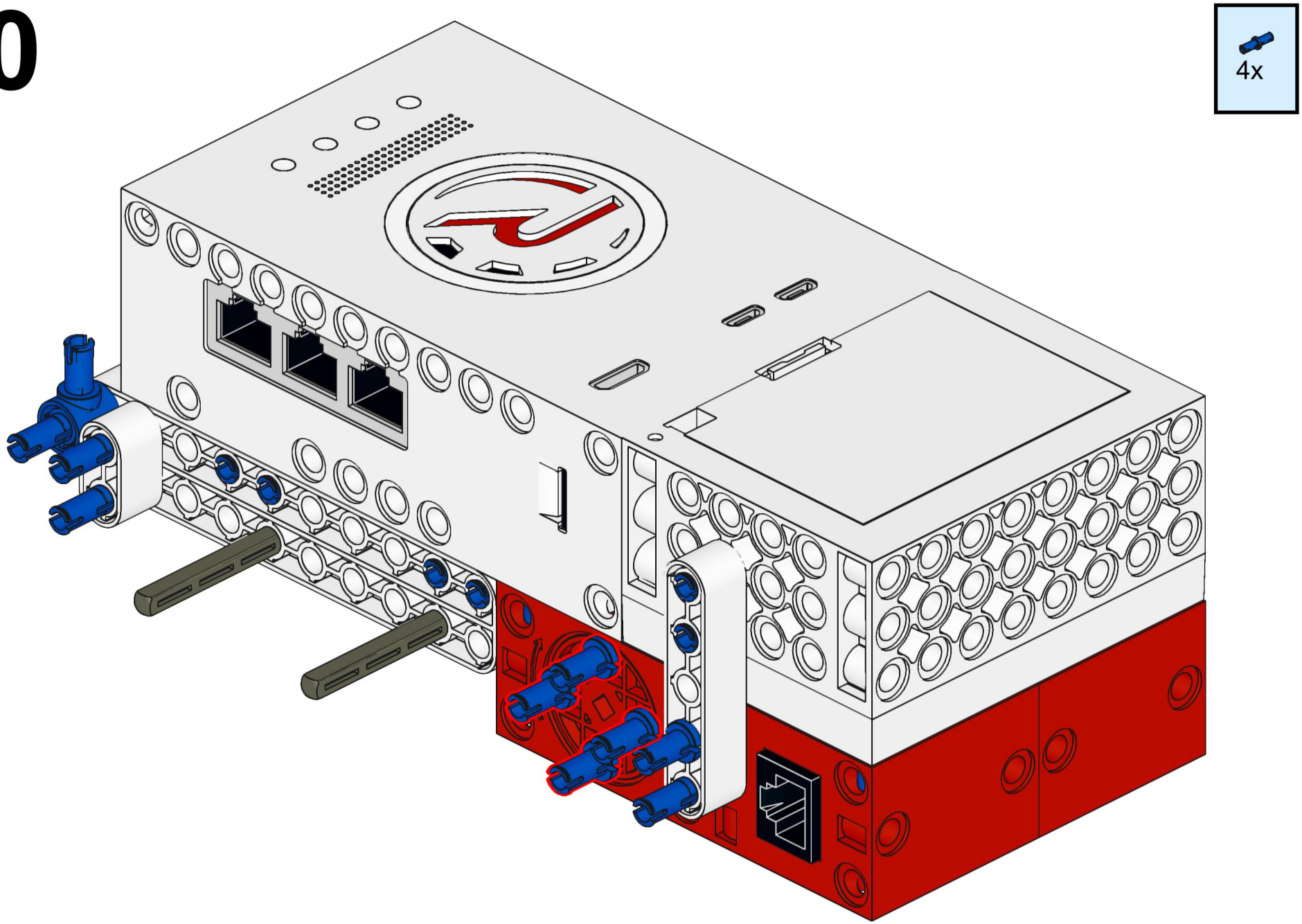

21

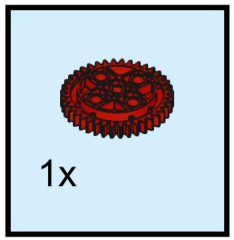

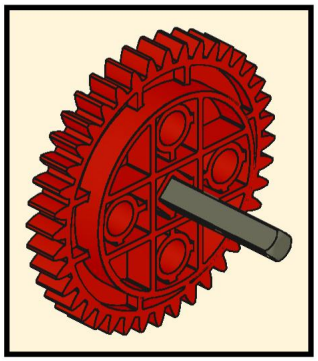

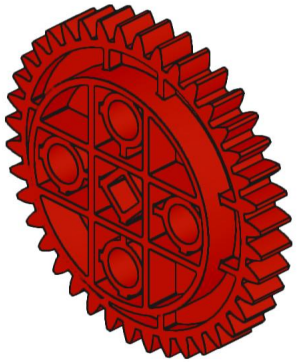

22

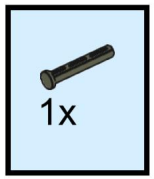

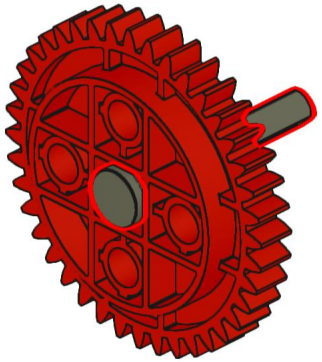

23

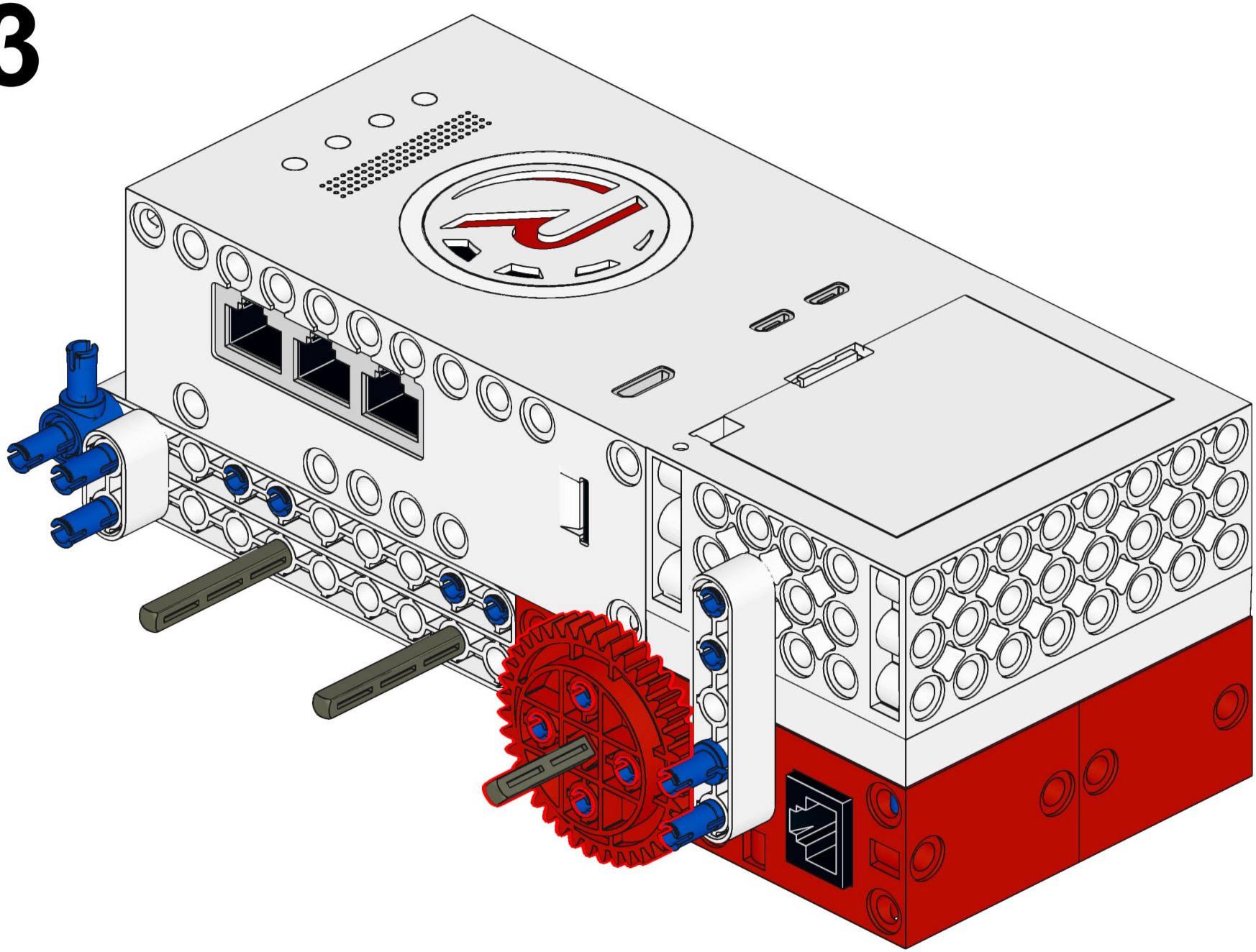

24

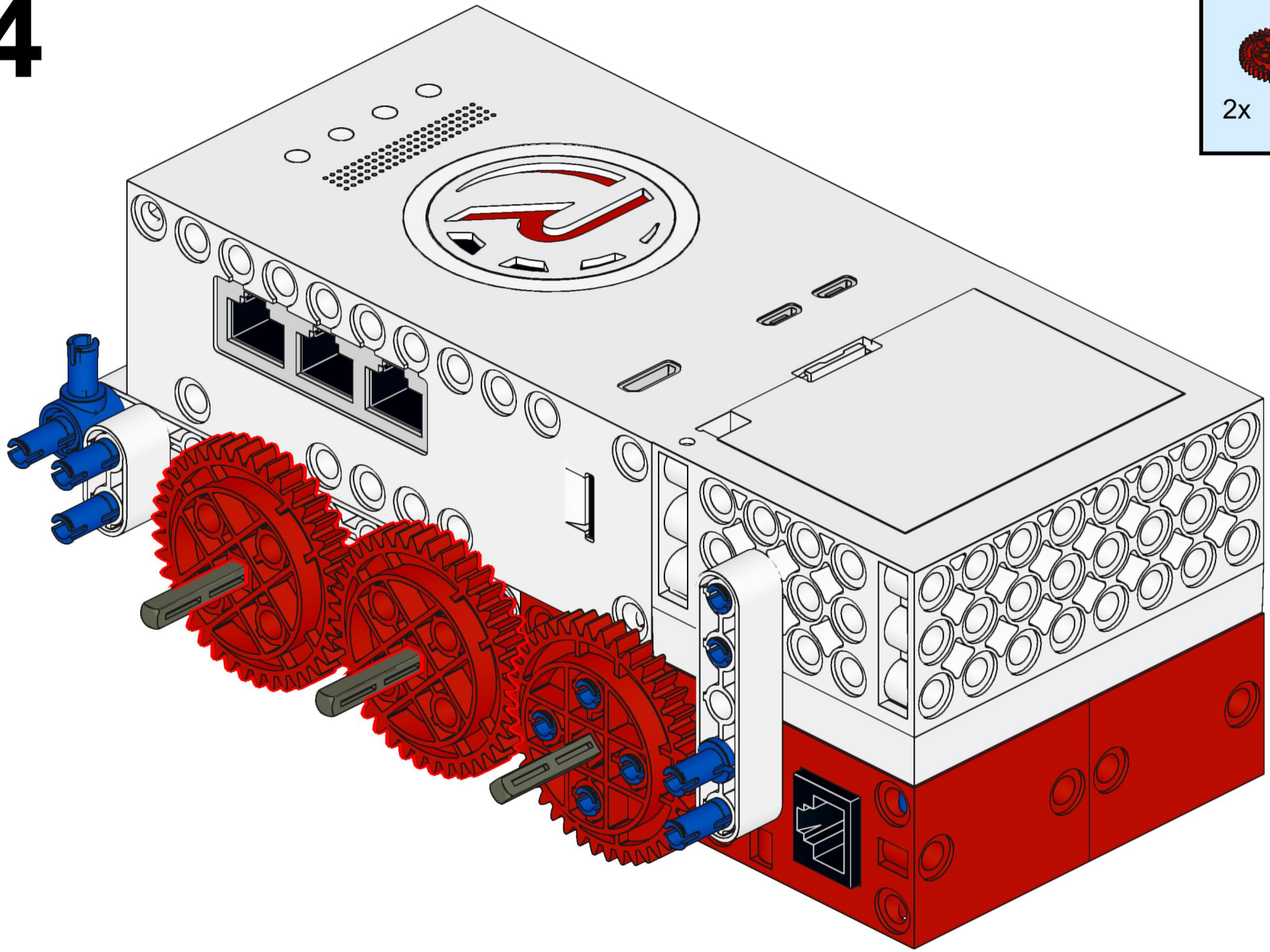

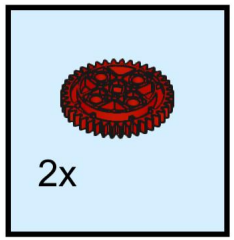

25

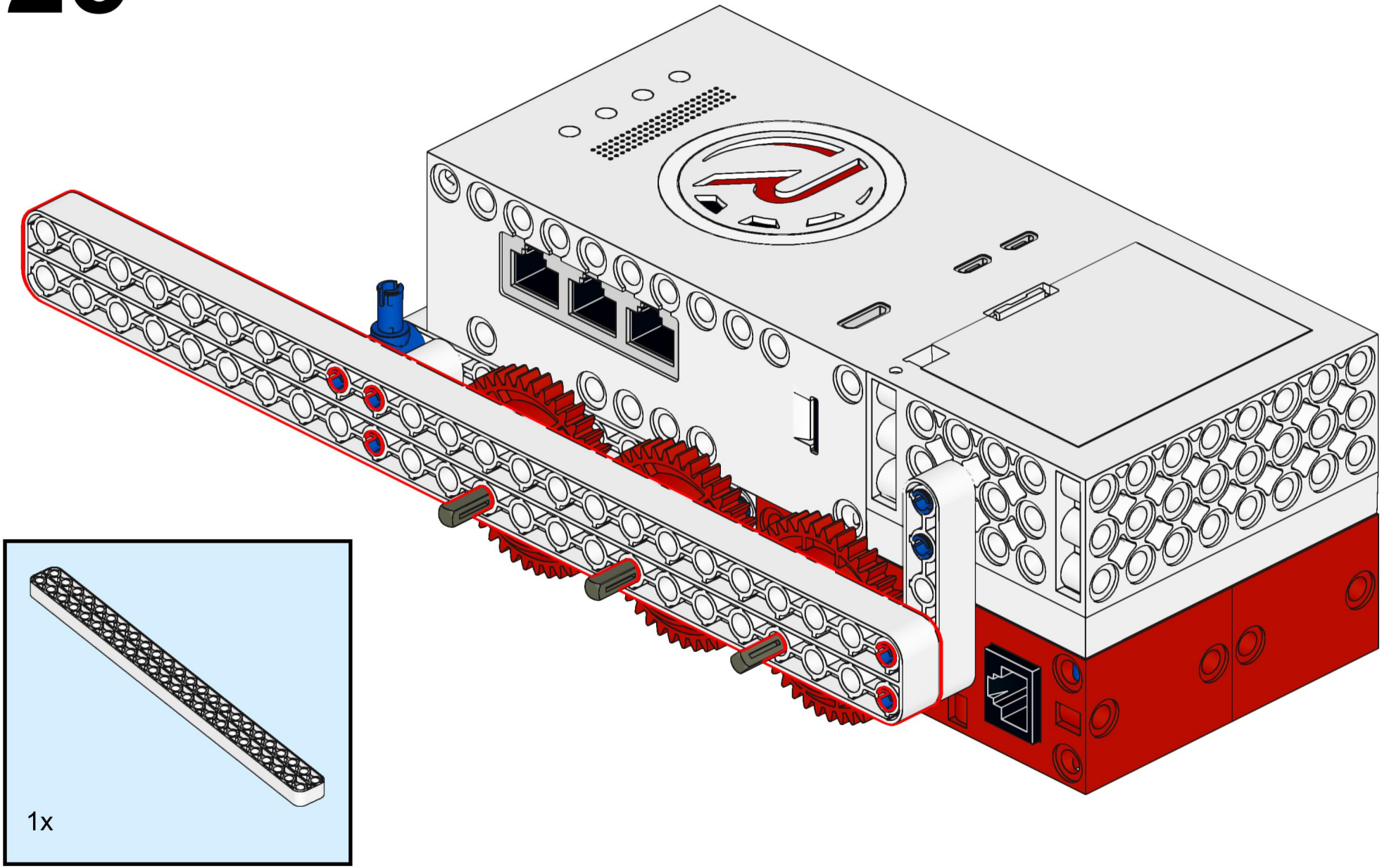

26

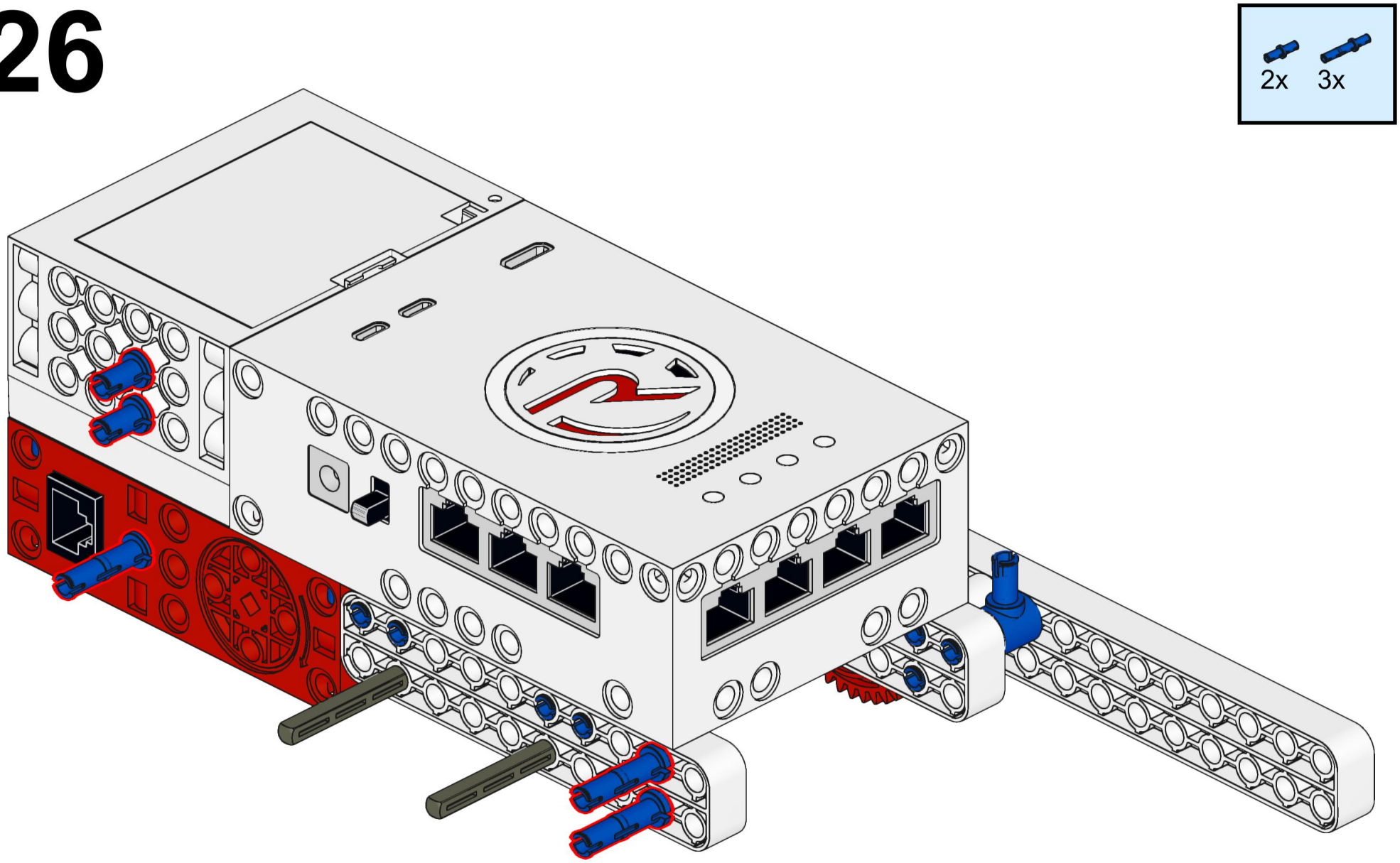

27

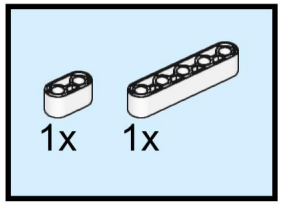

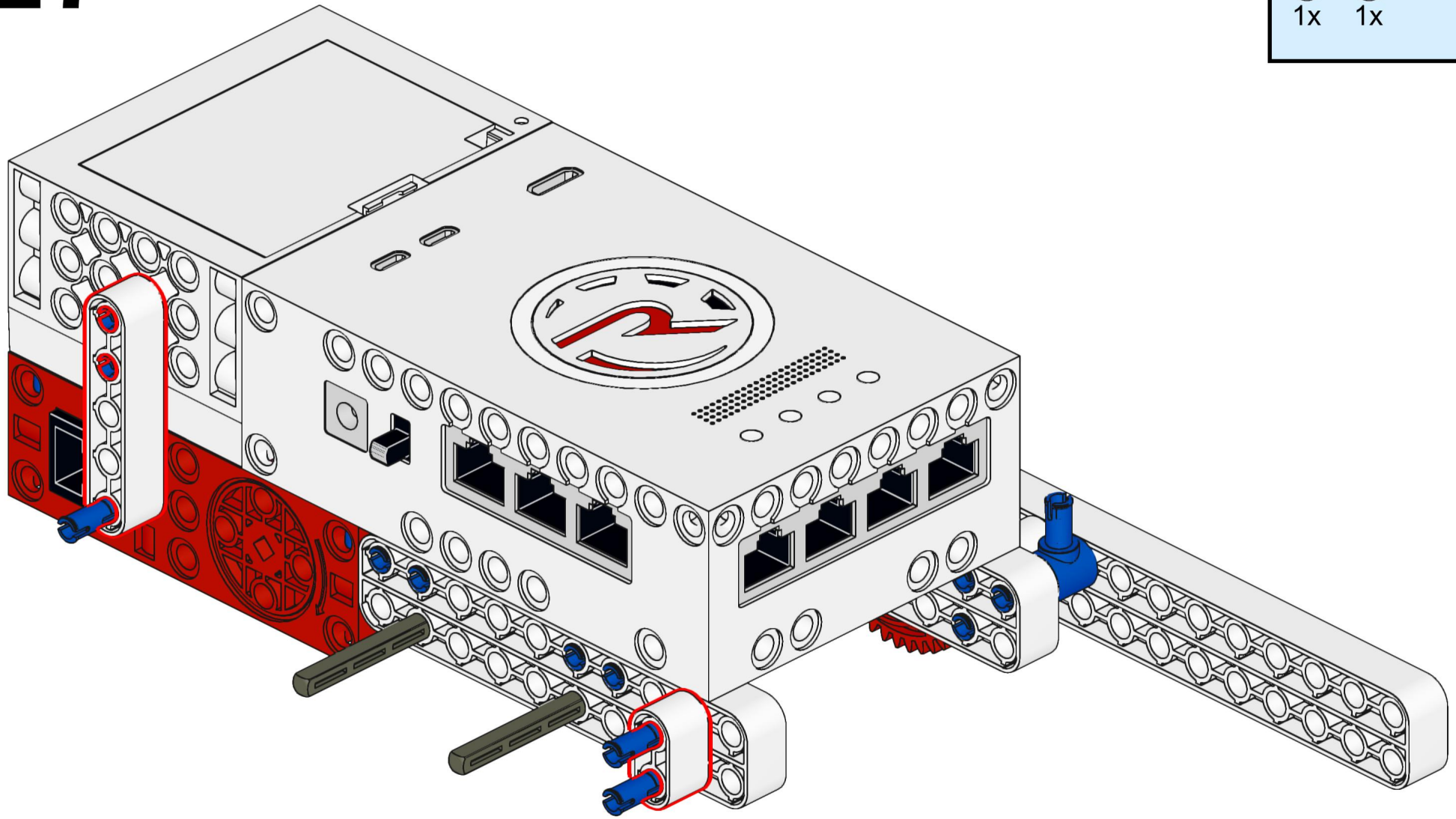

28

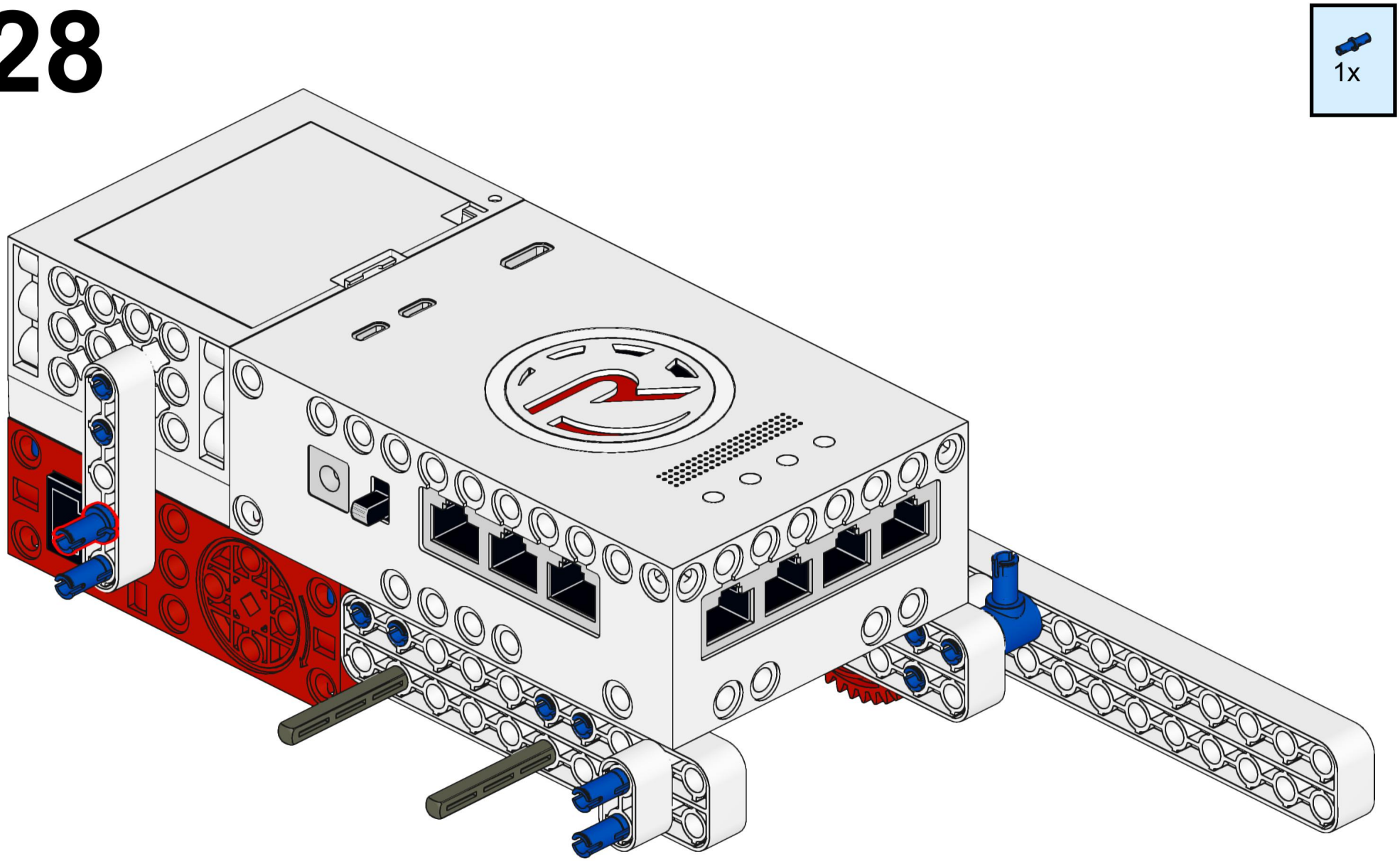

29

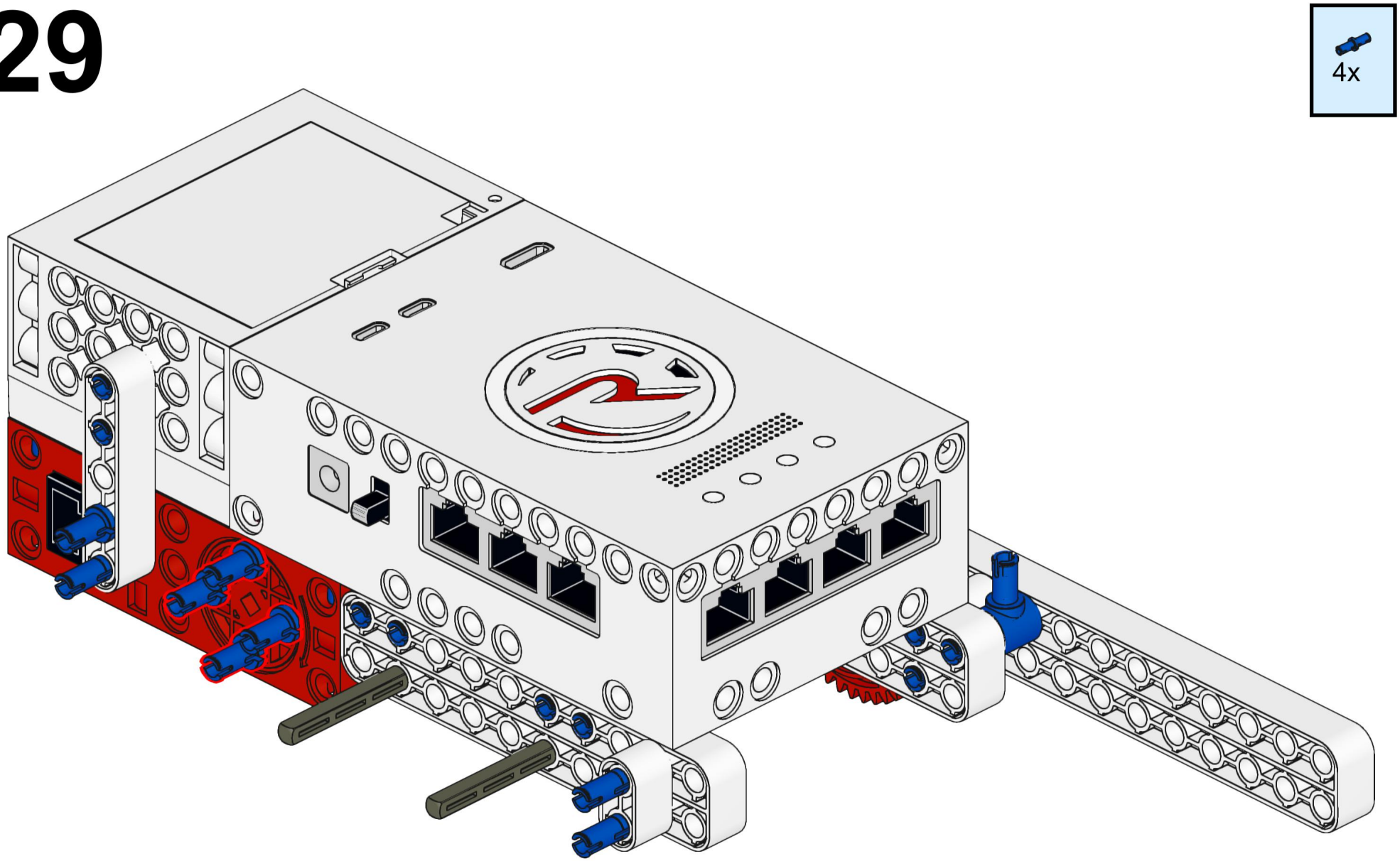

30

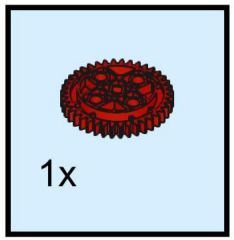

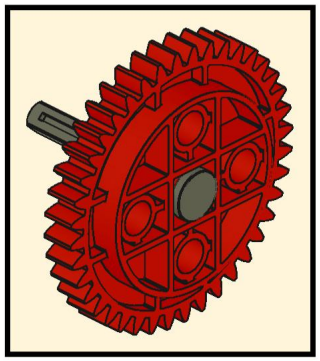

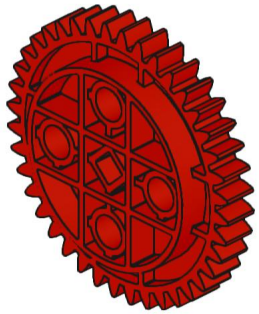

31

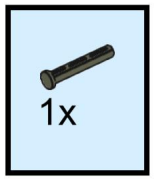

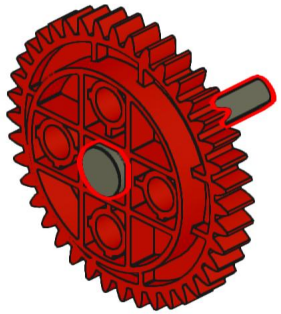

32

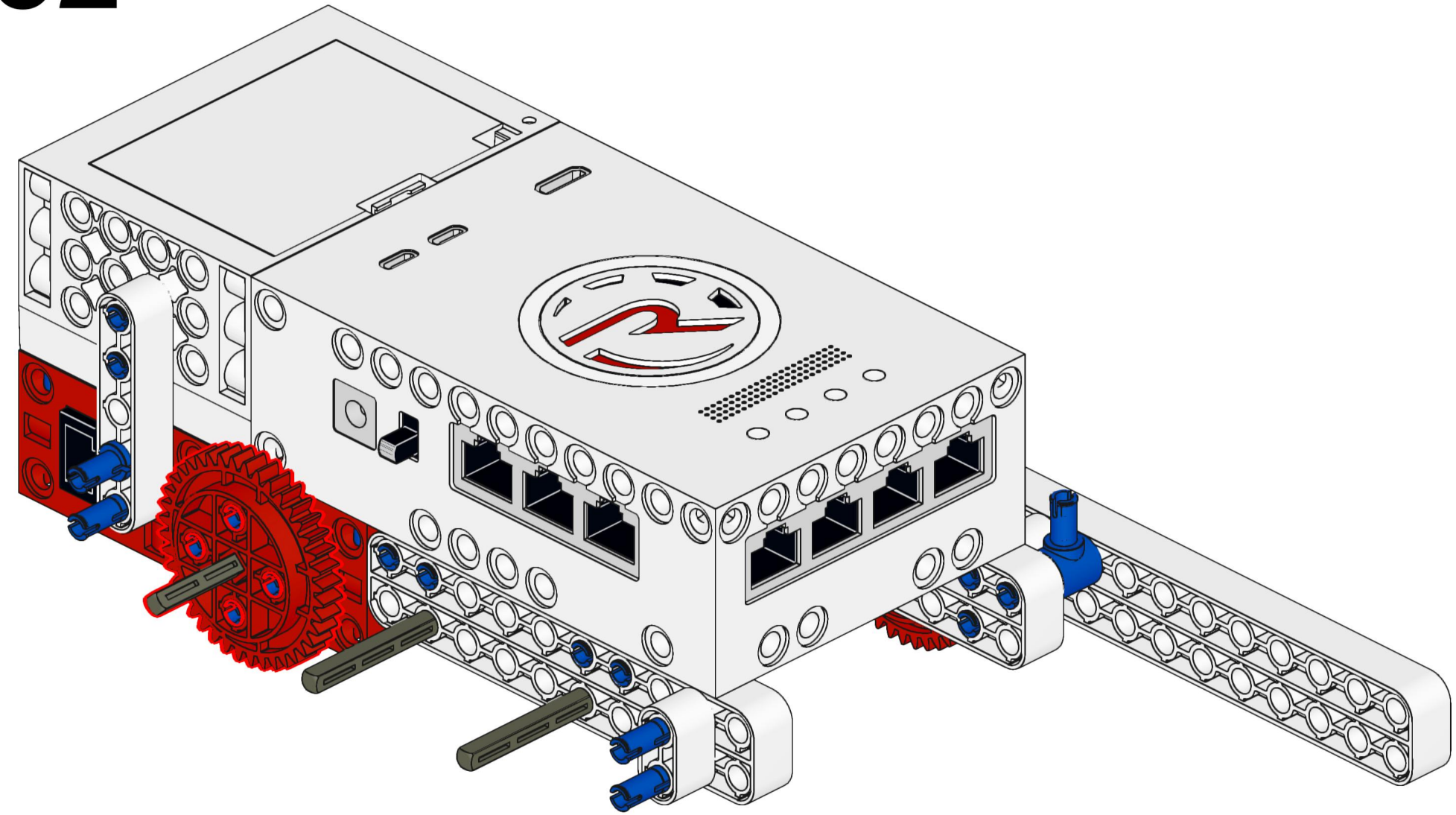

33

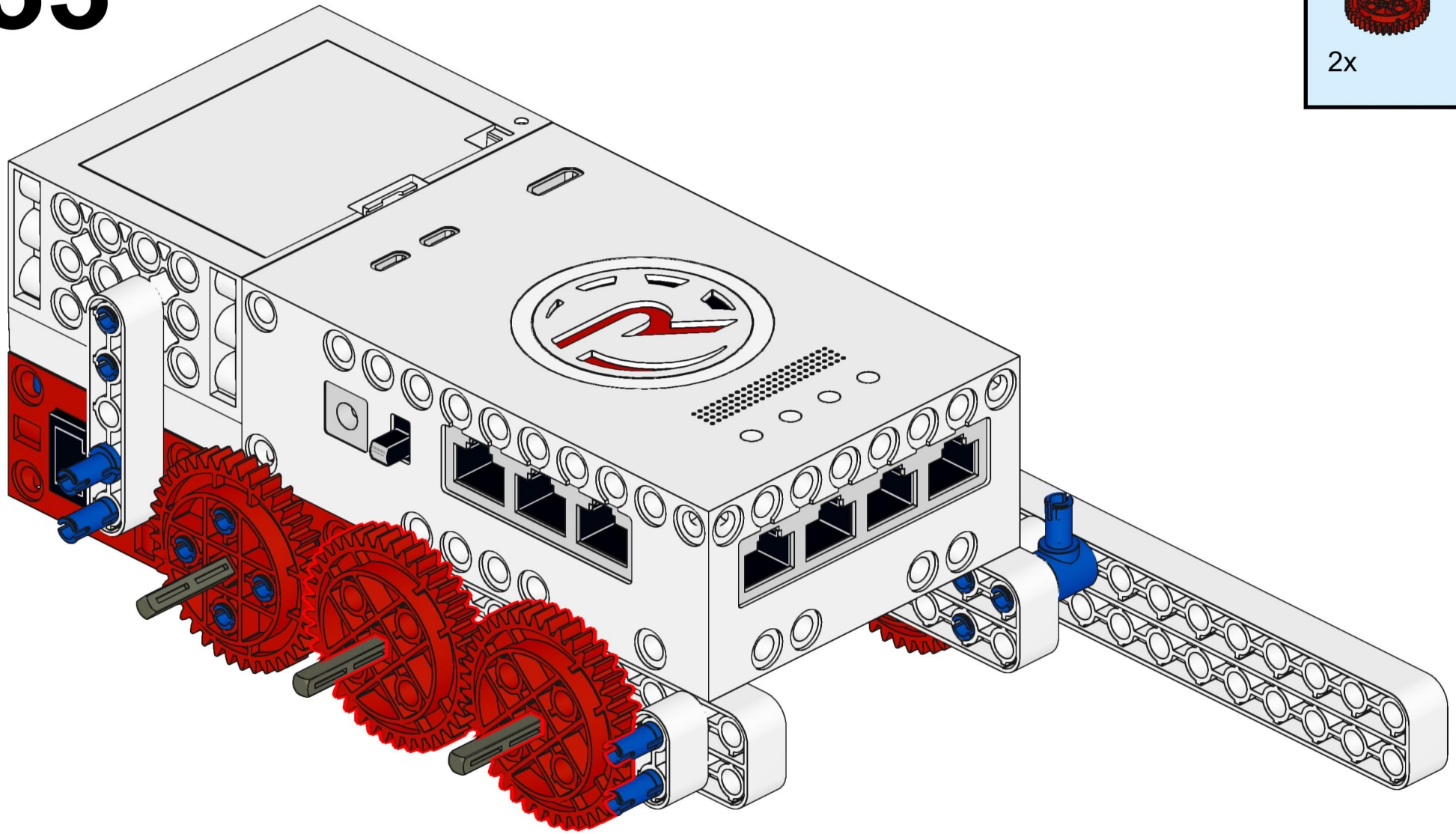

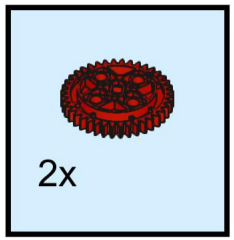

34

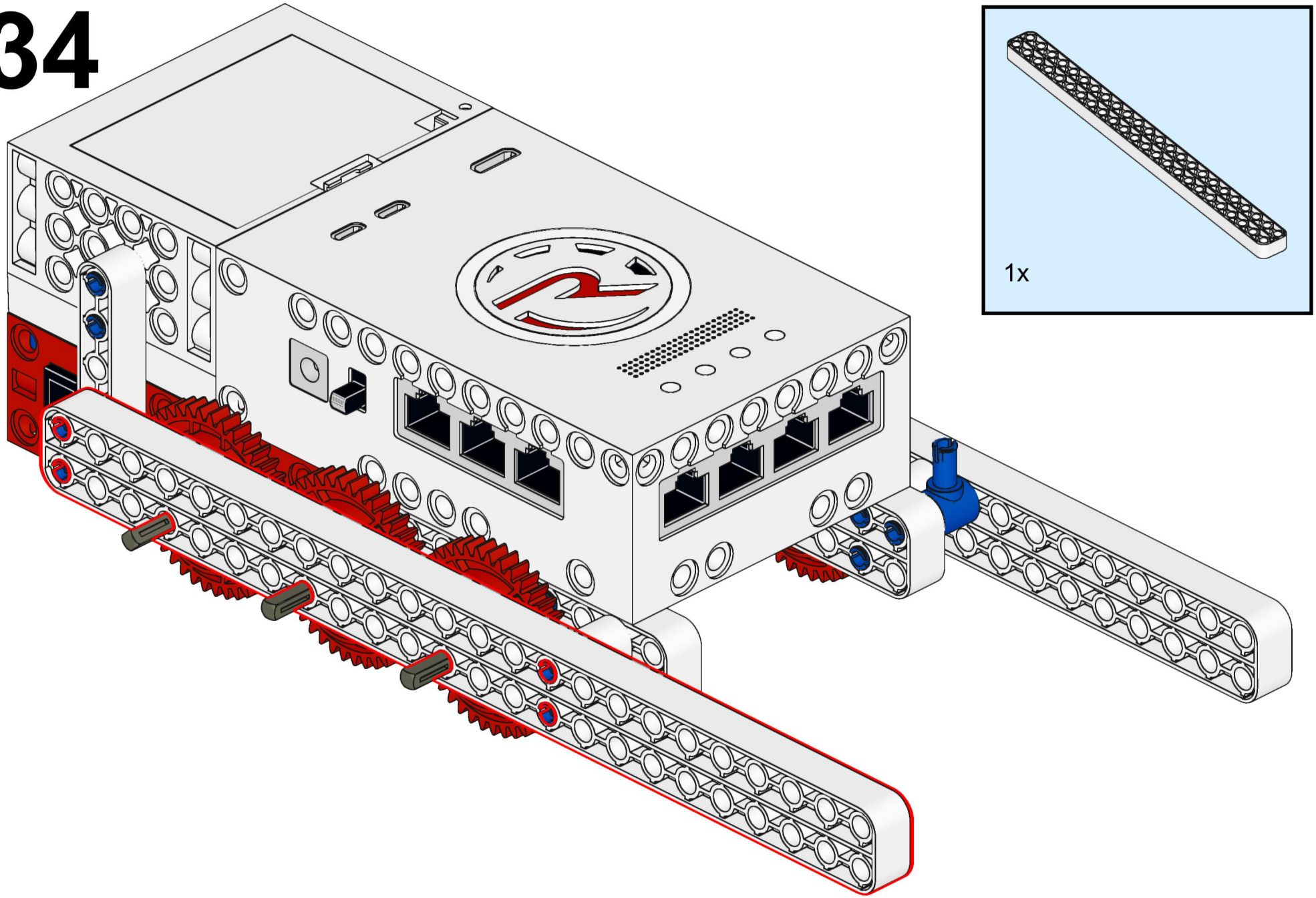

35

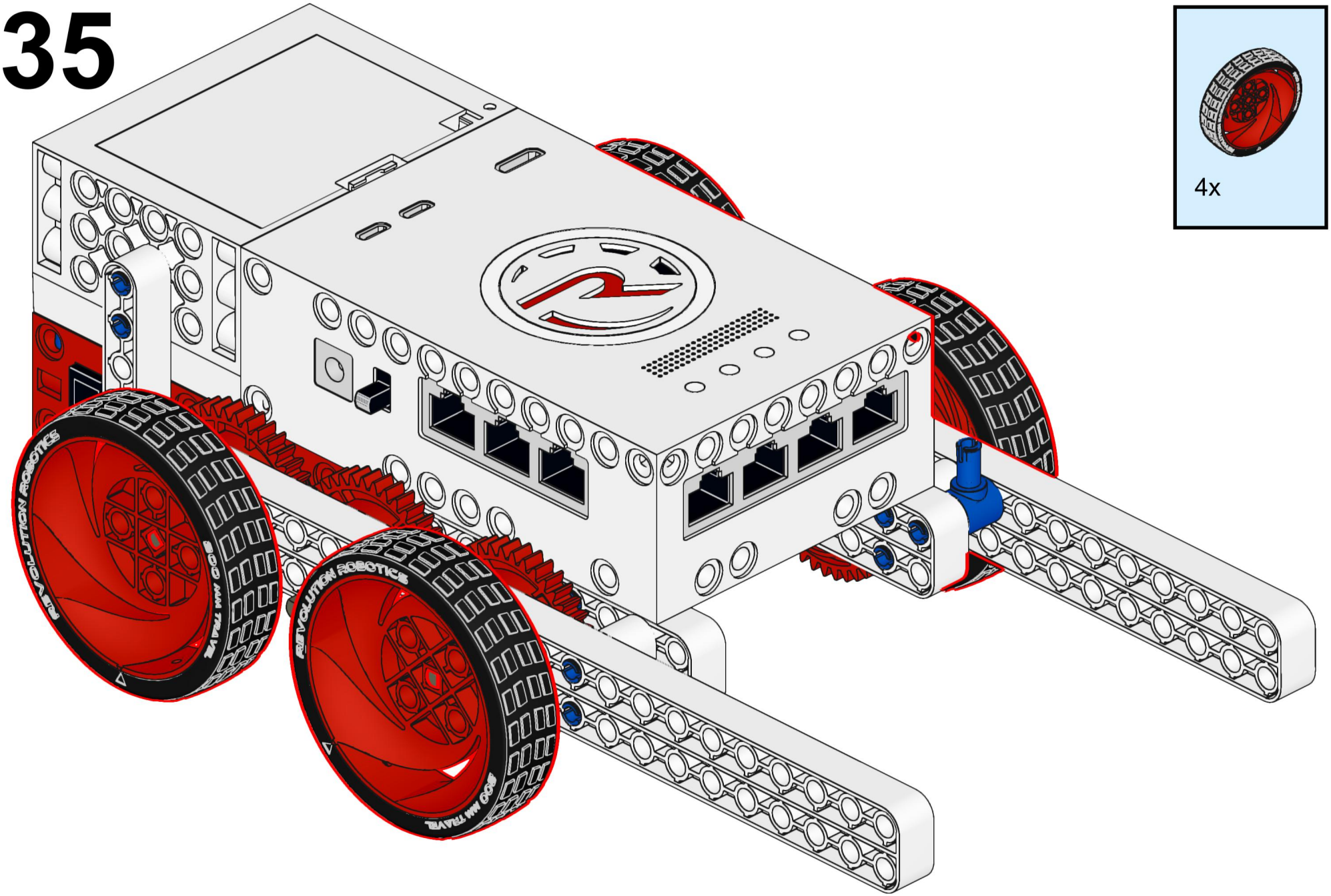

36

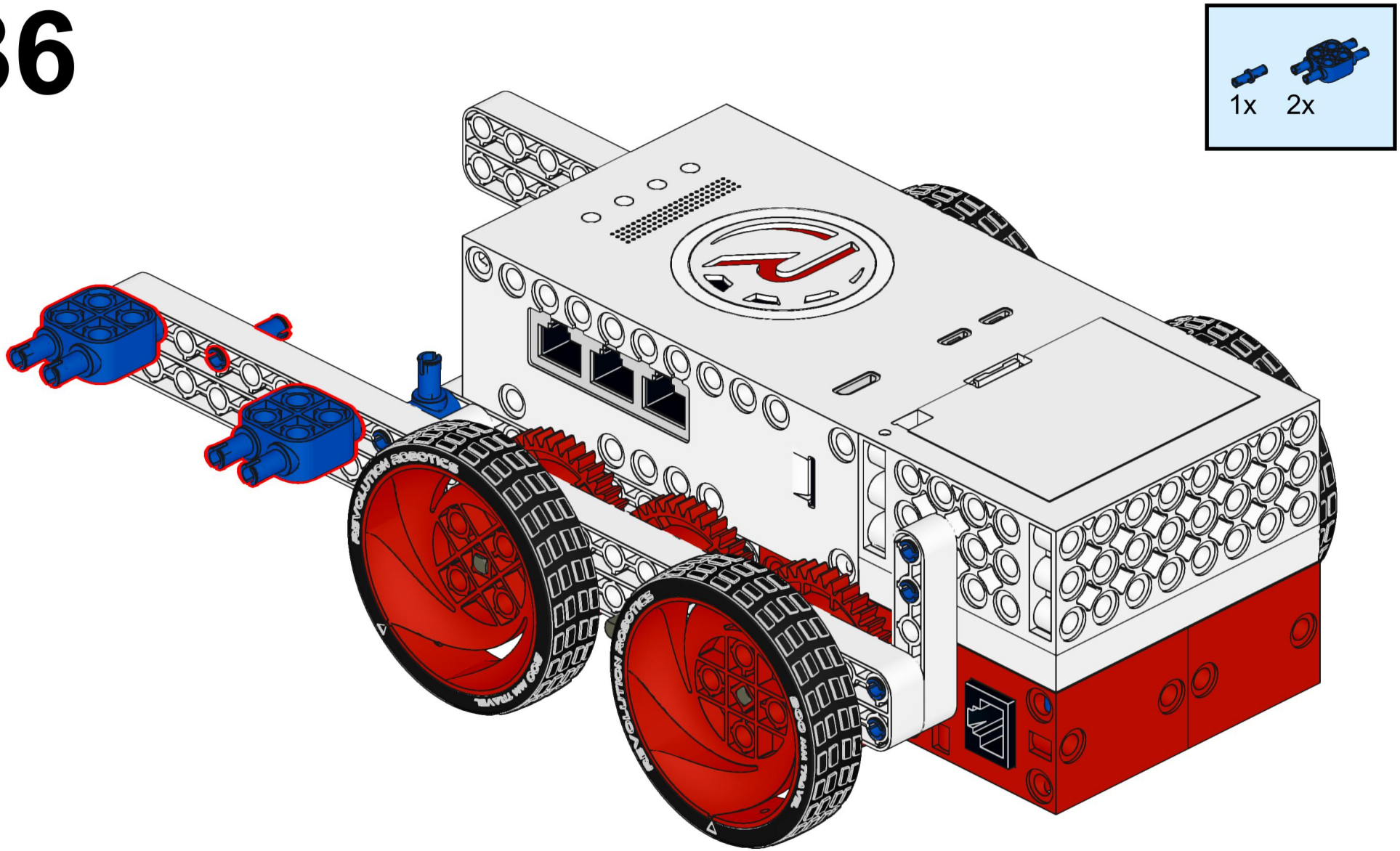

37

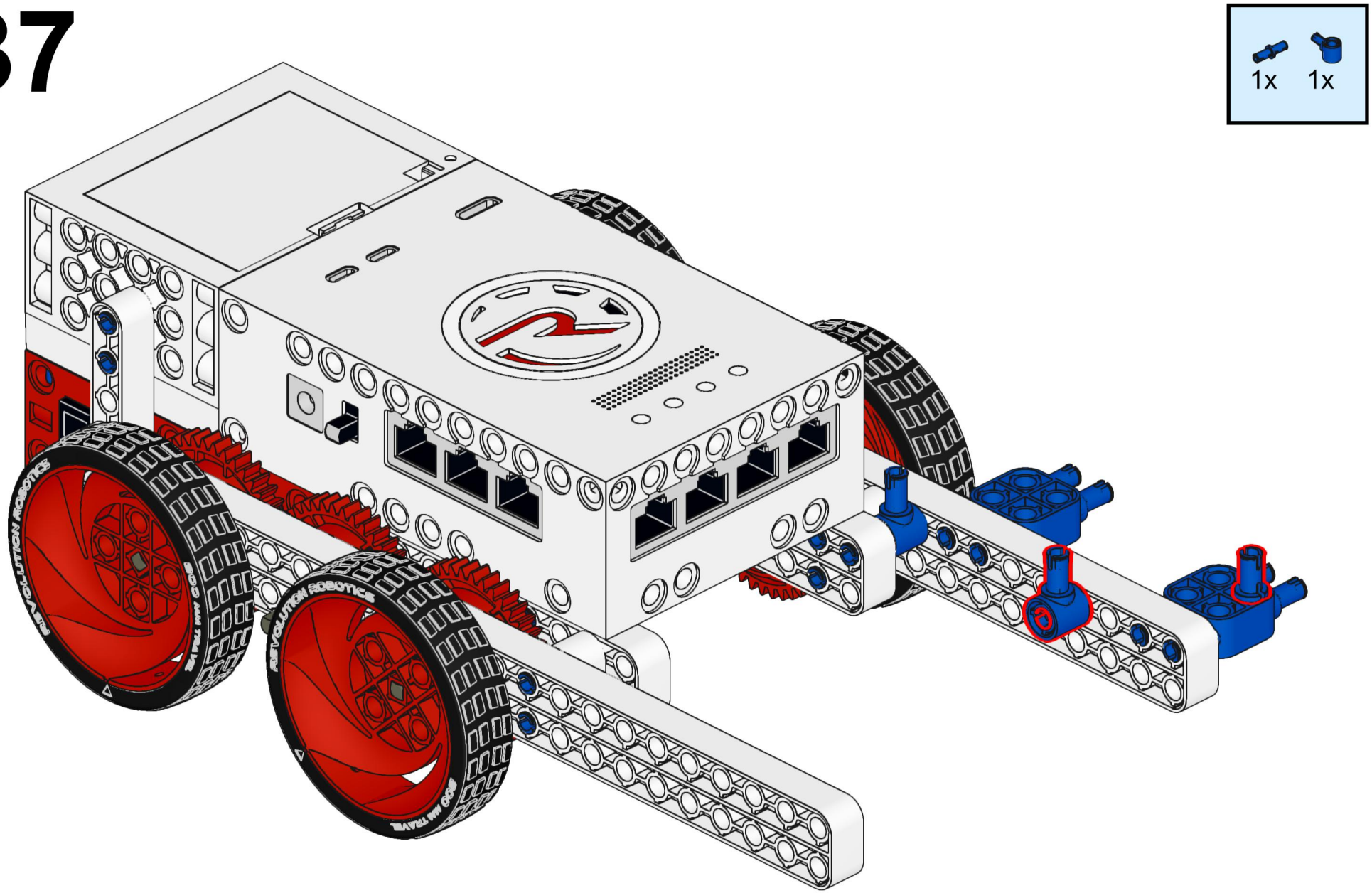

38

4x

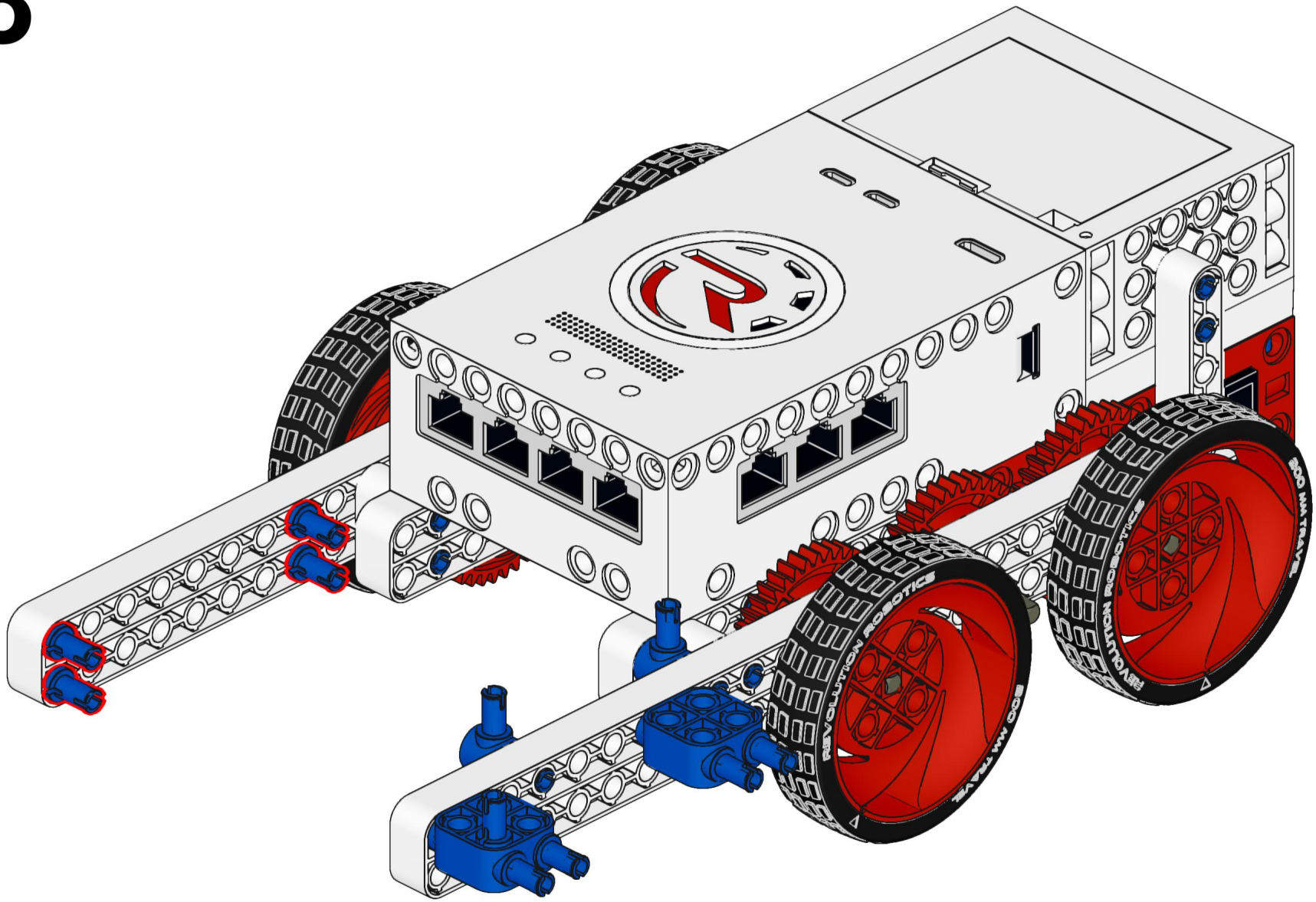
REVOLUTION ROBOTICS
200 MM TRAVEL
REVOLUTION ROBOTICS
200 MM TRAVEL

39

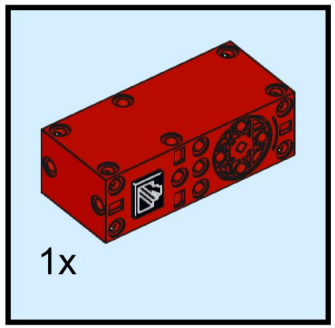

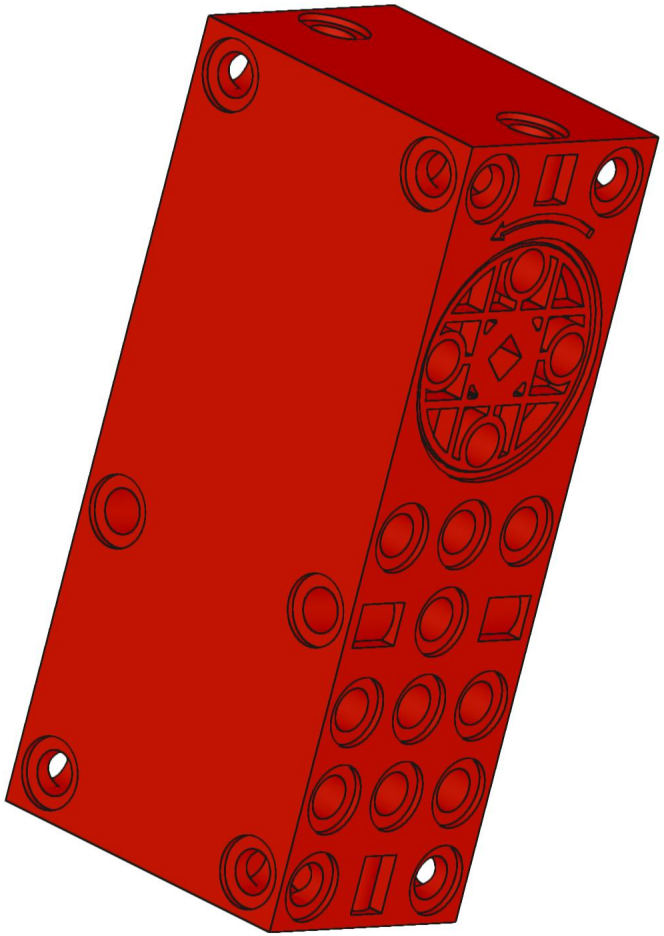

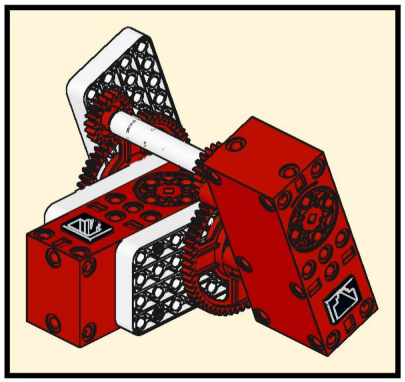

40

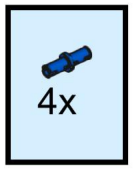

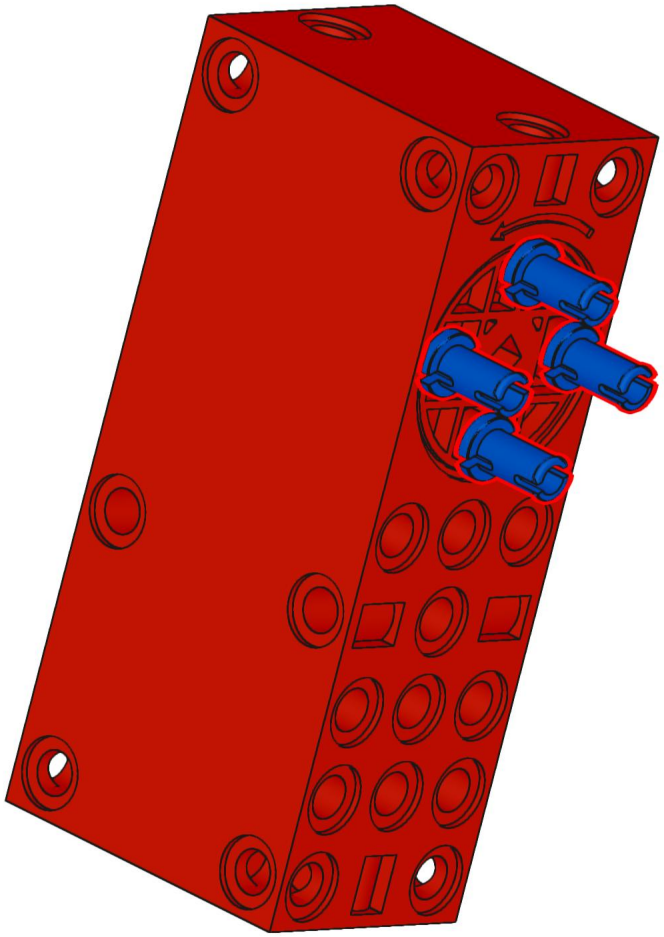

41

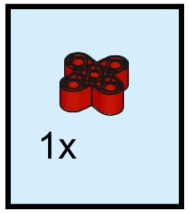

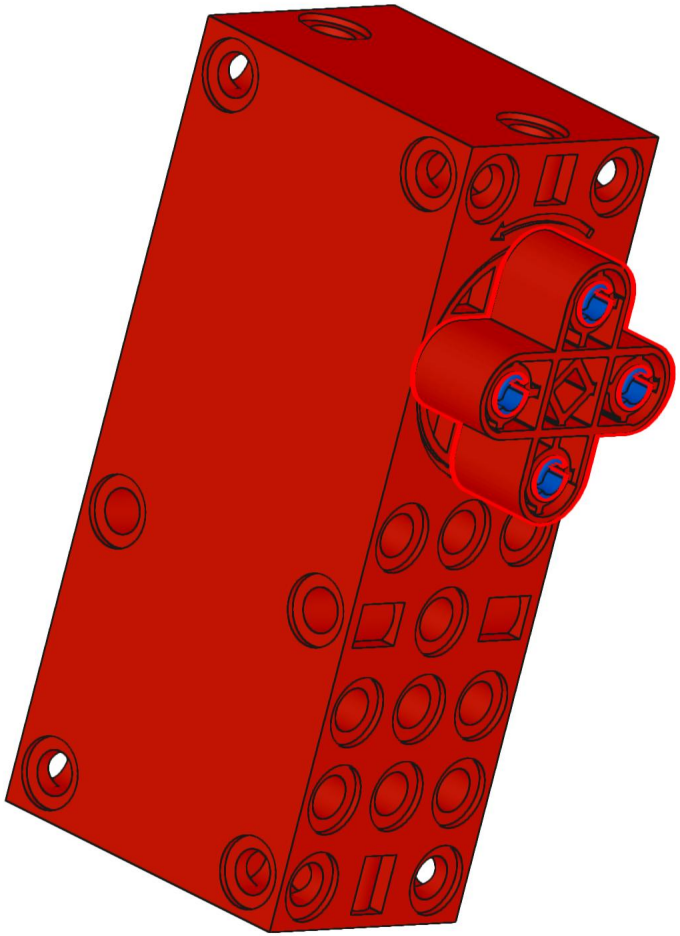

42

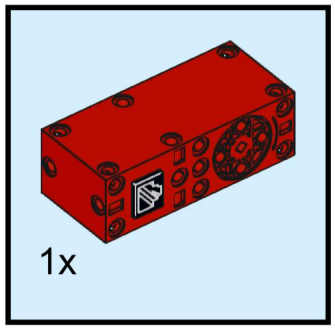

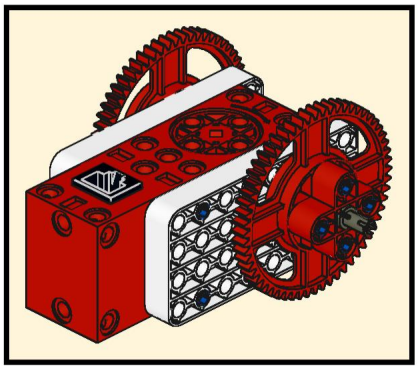

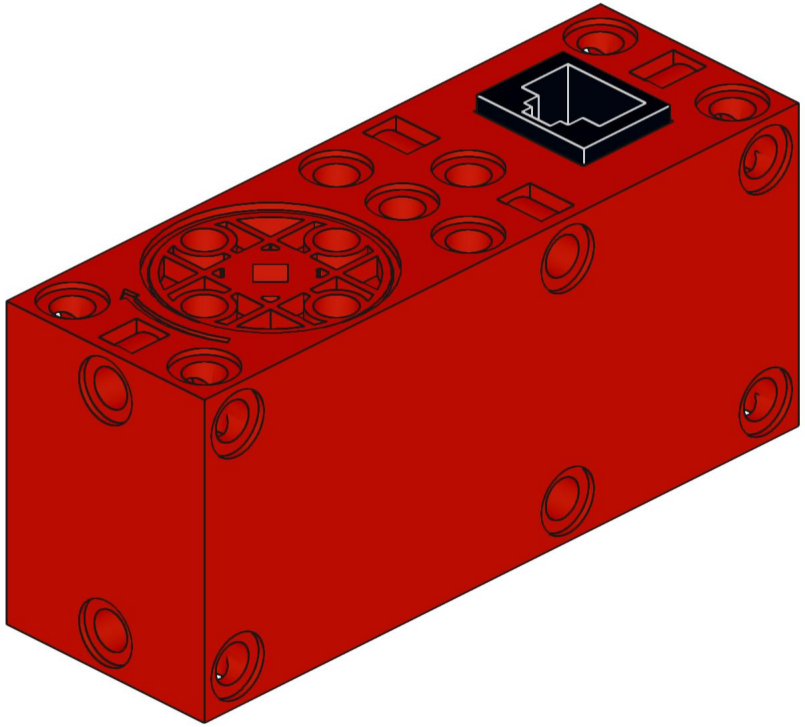

43

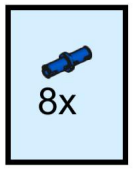

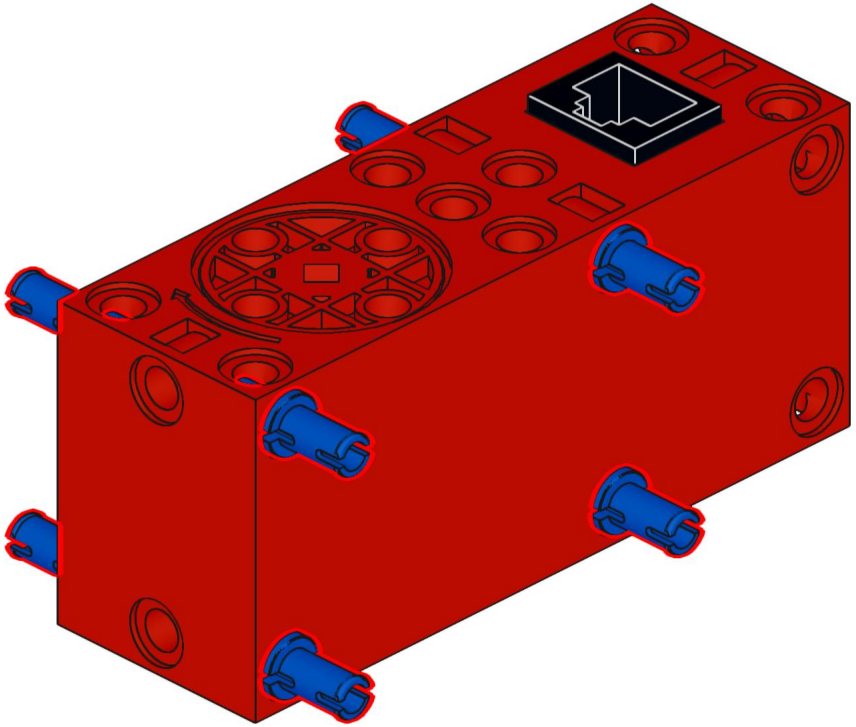

44

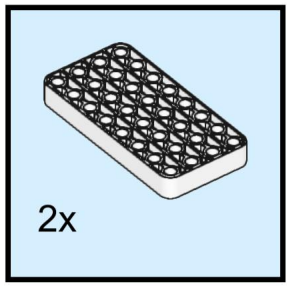

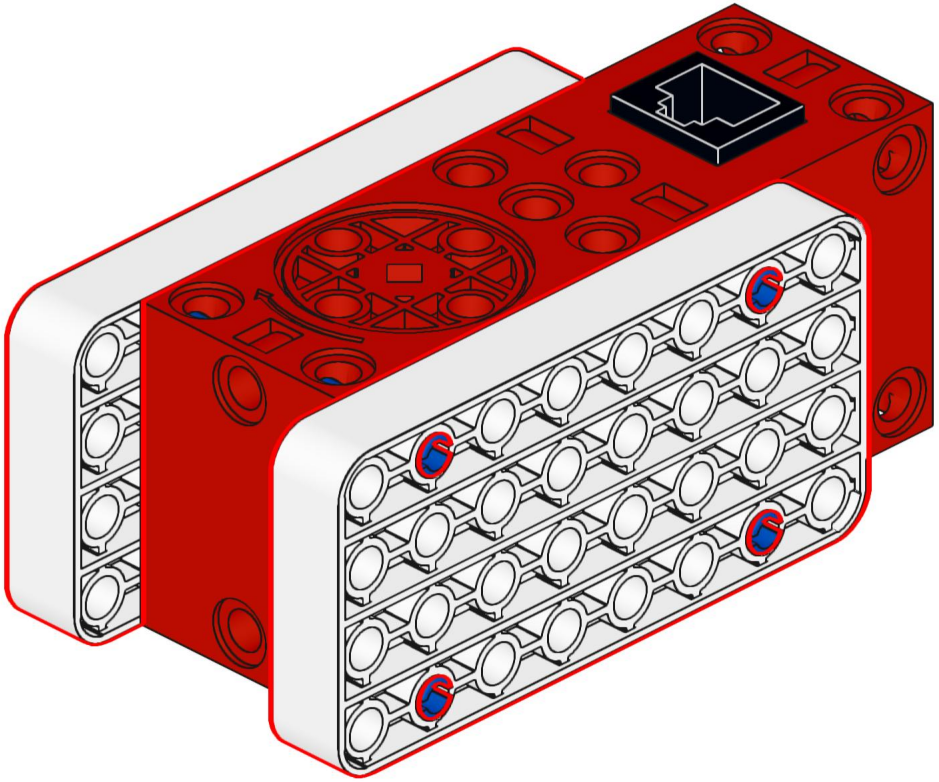

45

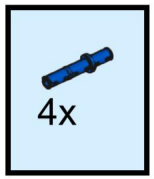

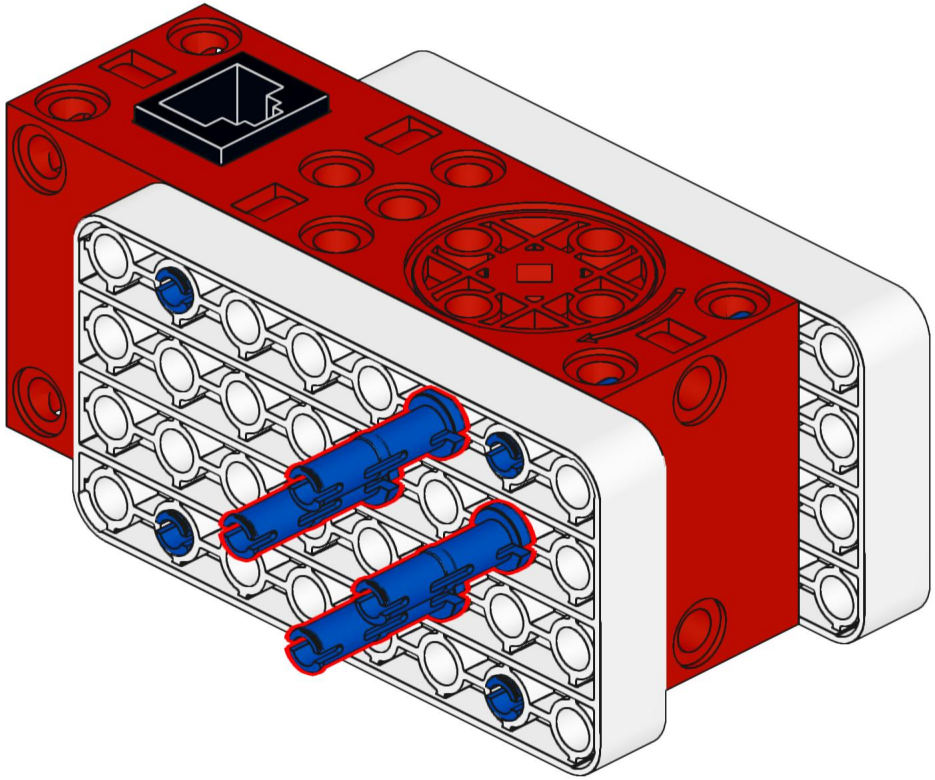

46

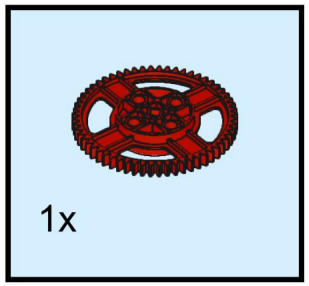

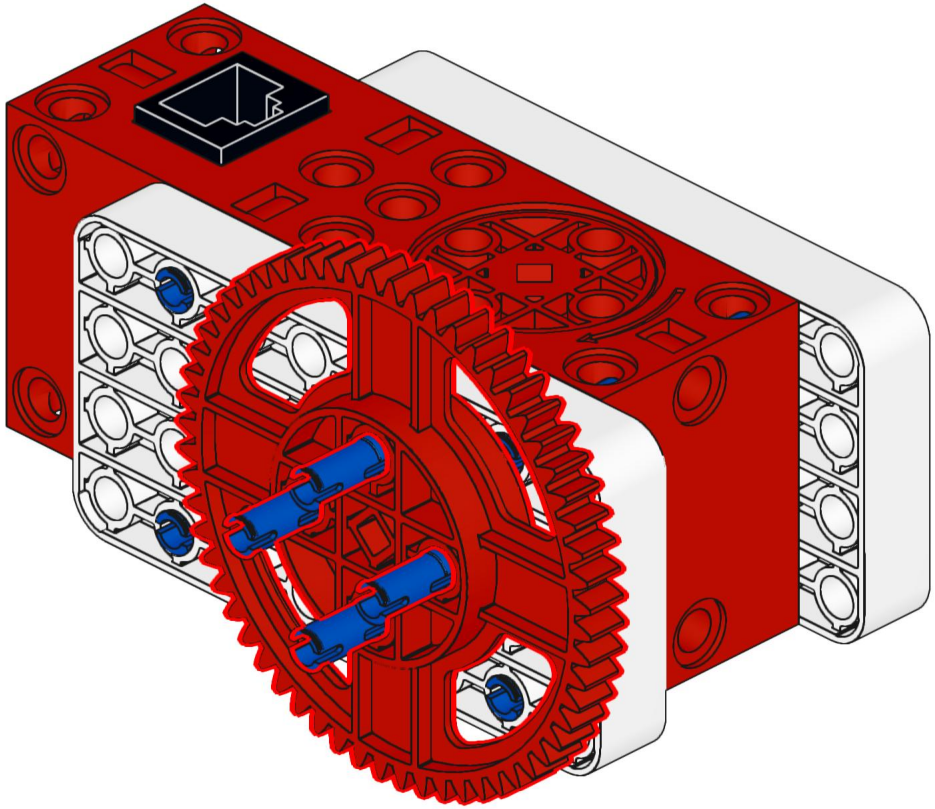

47

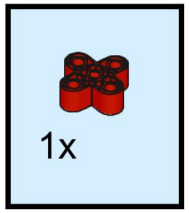

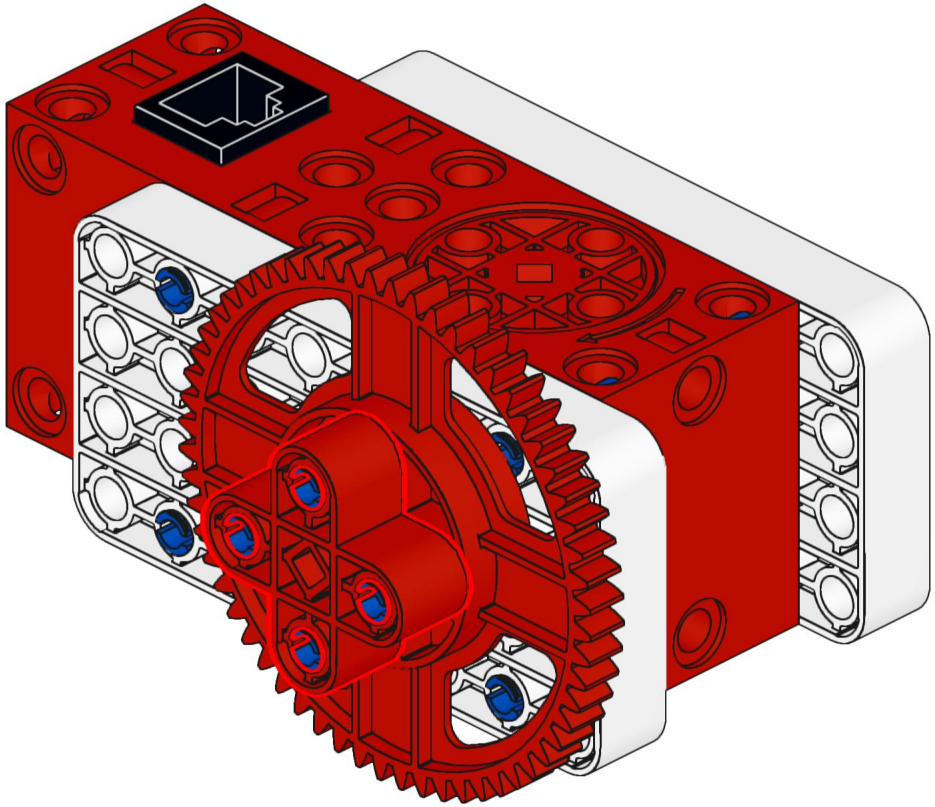

48

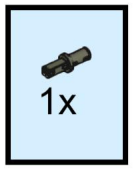

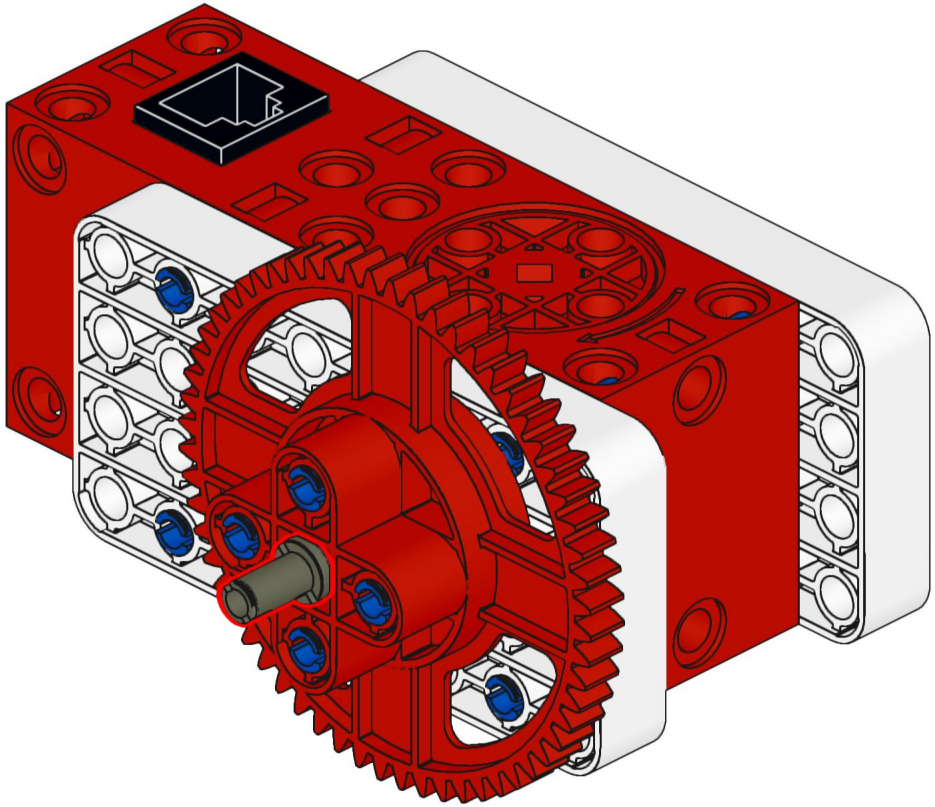

49

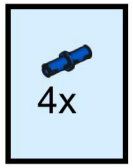

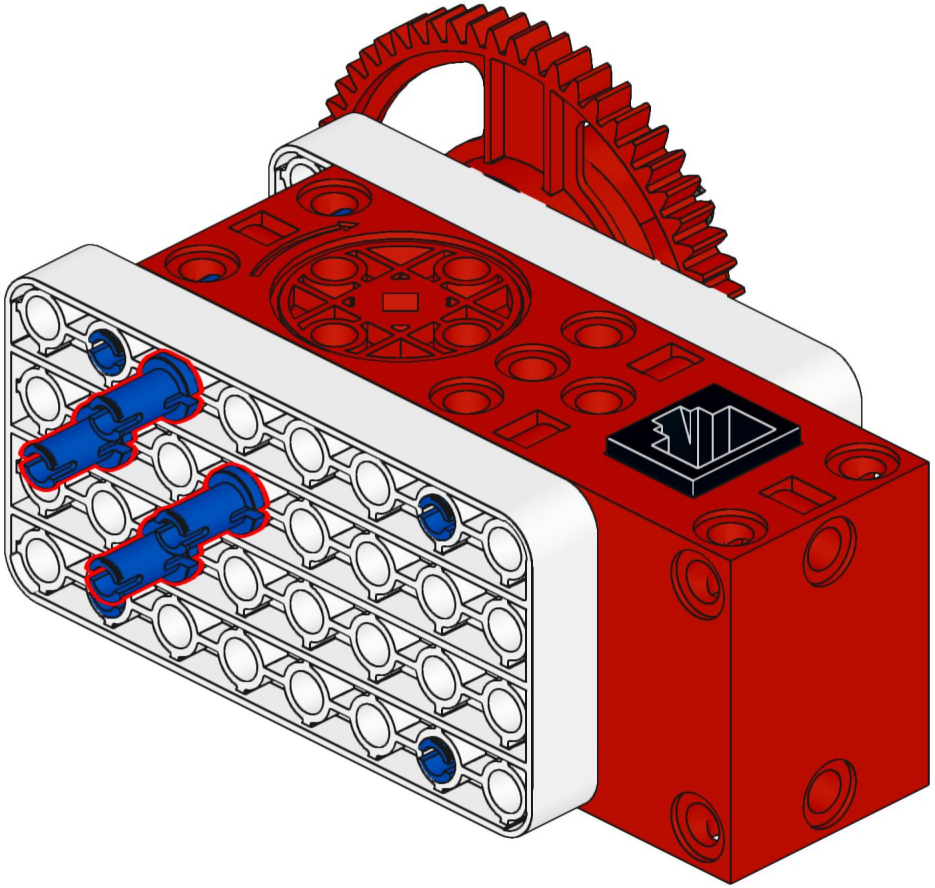

50

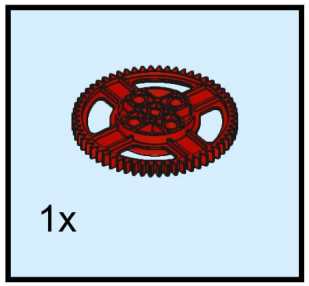

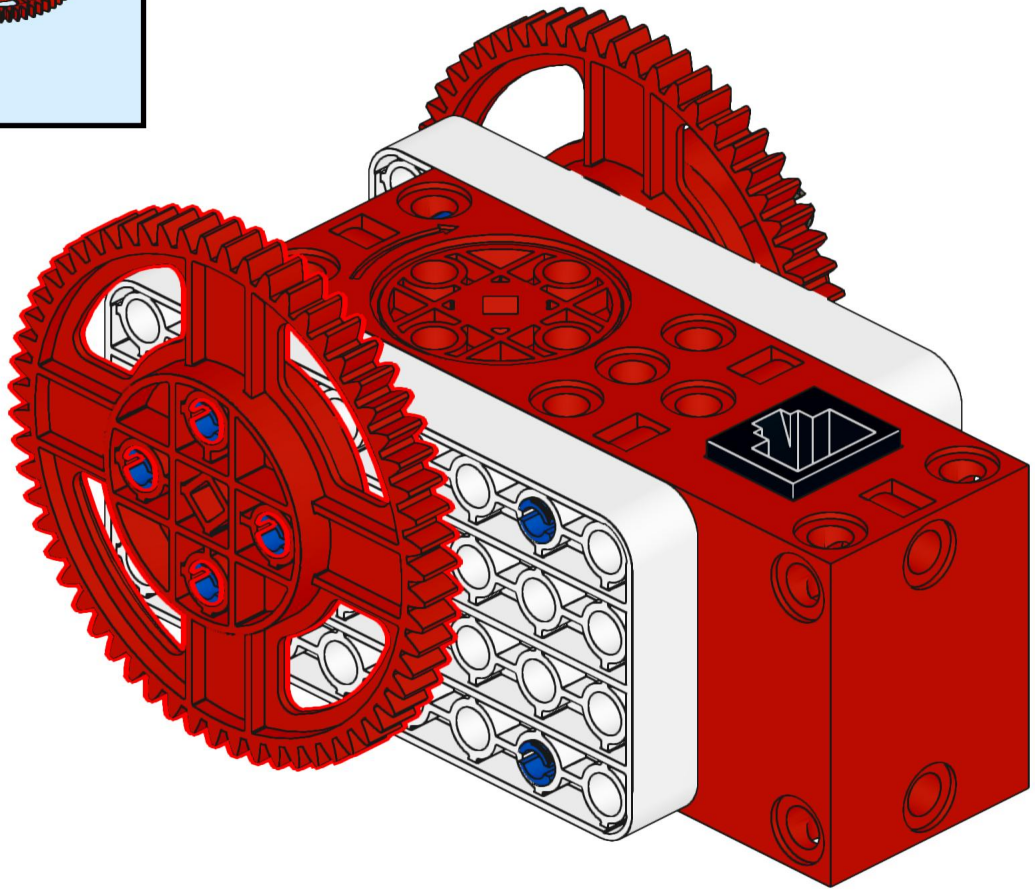

51

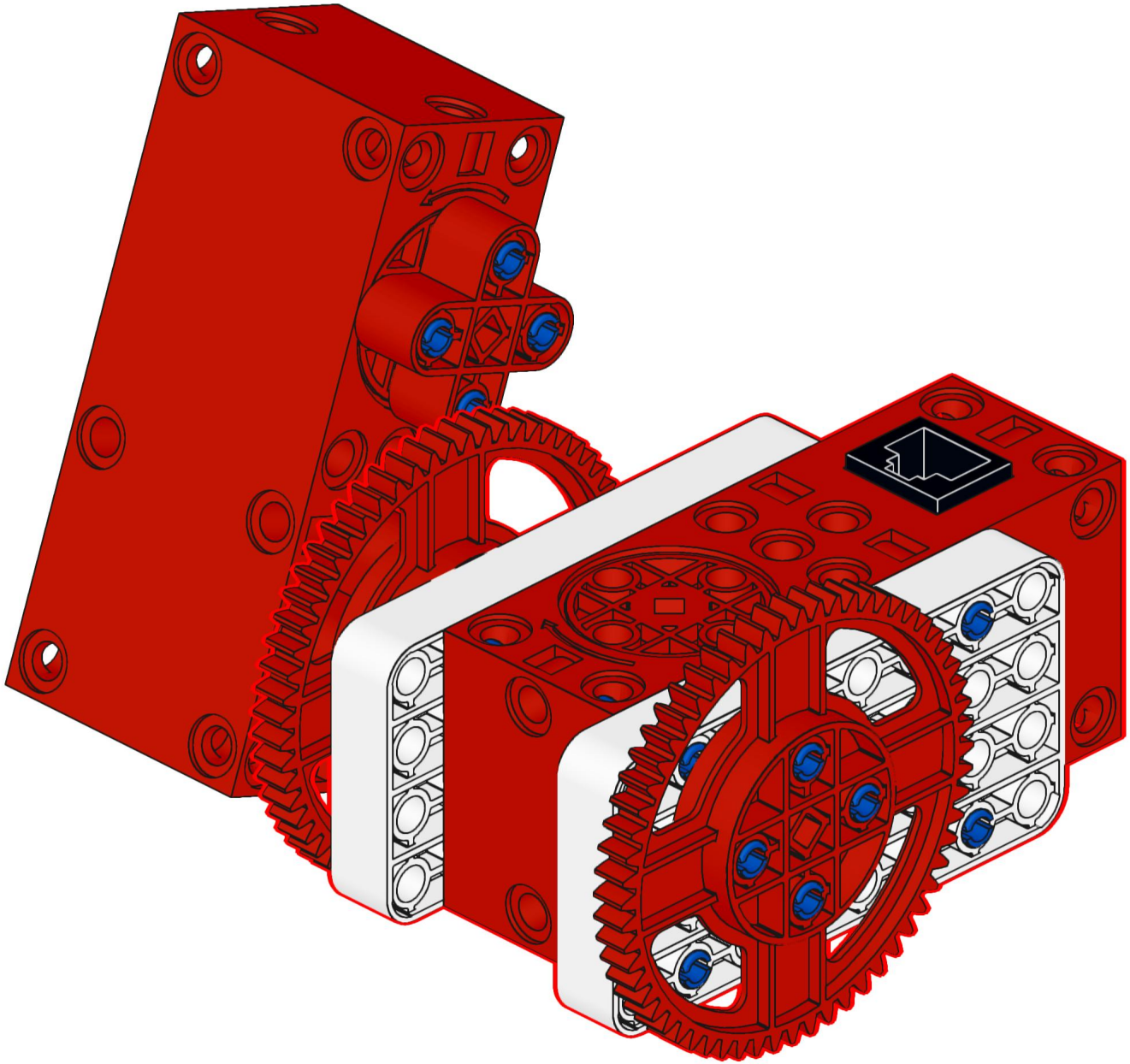

52

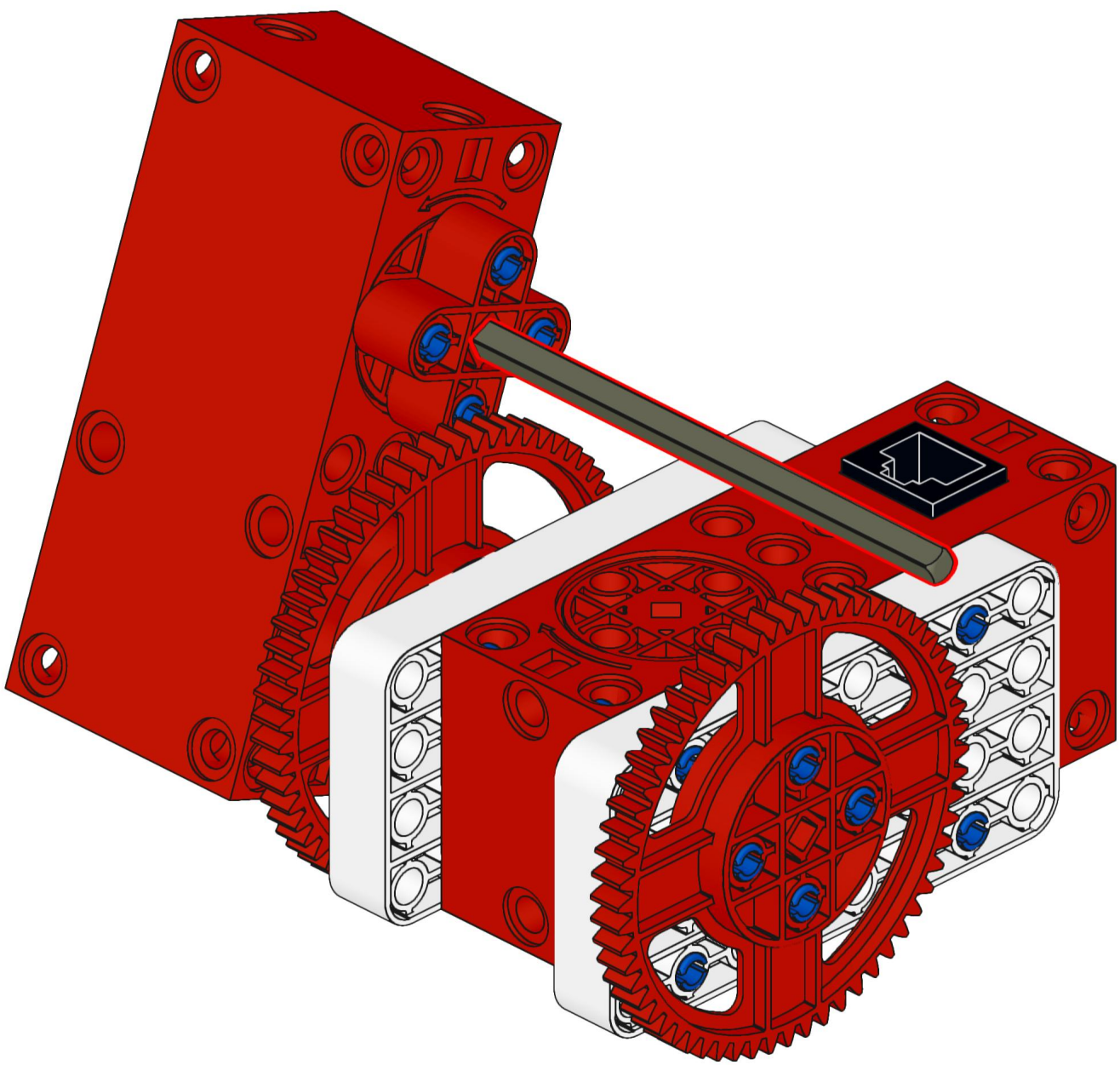

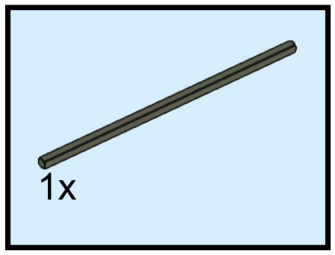

53

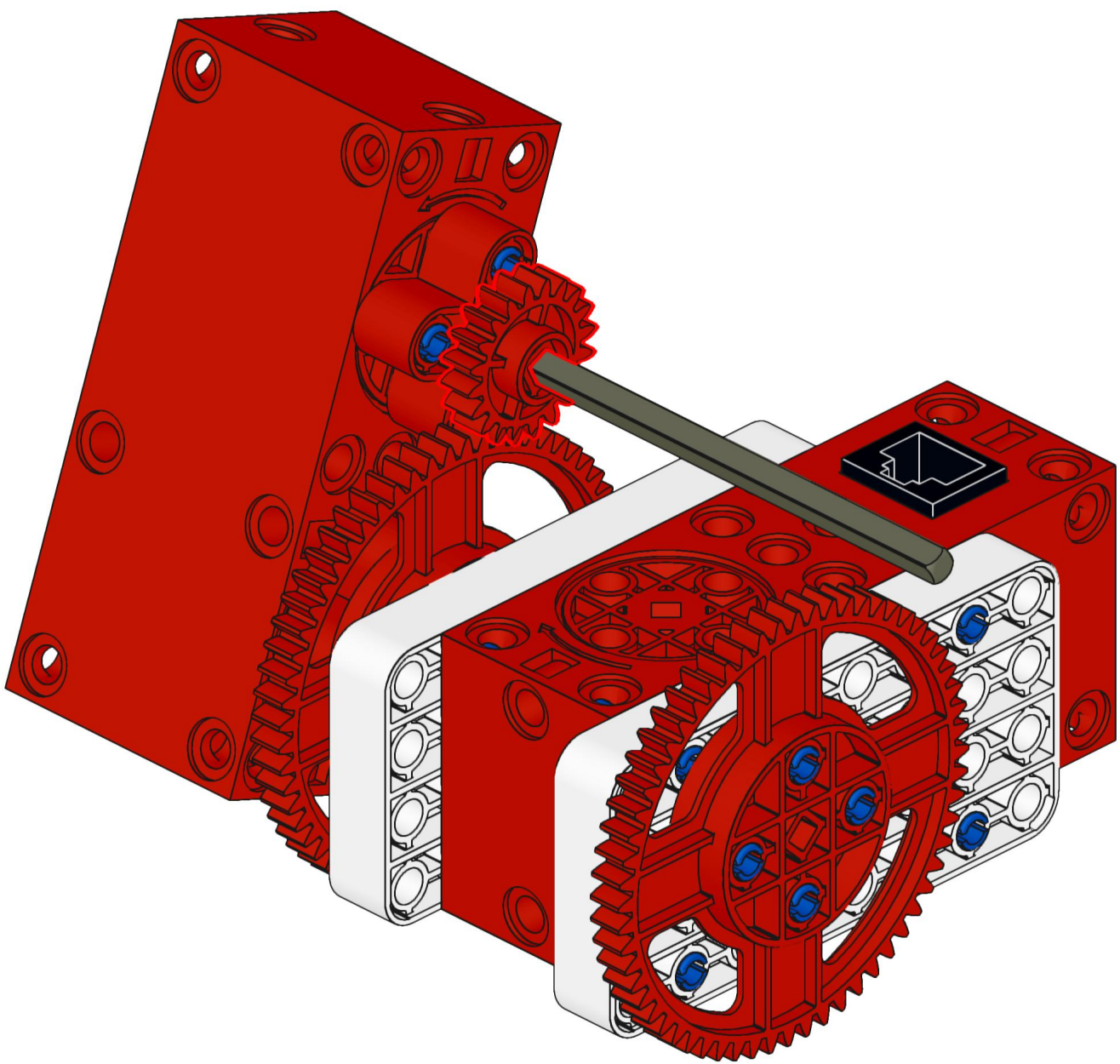

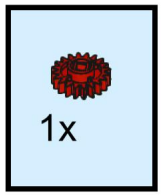

54

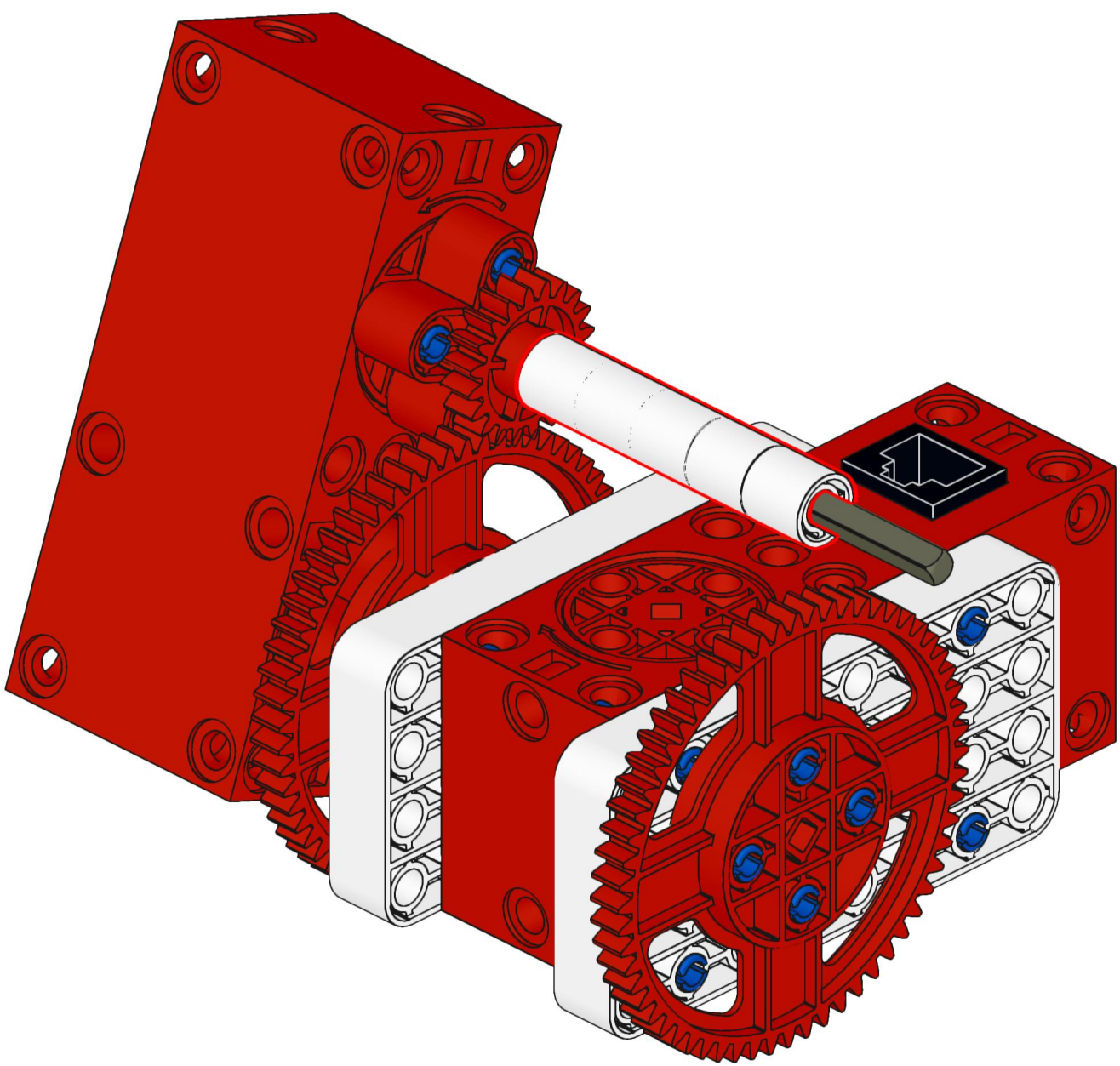

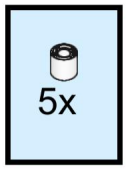

55

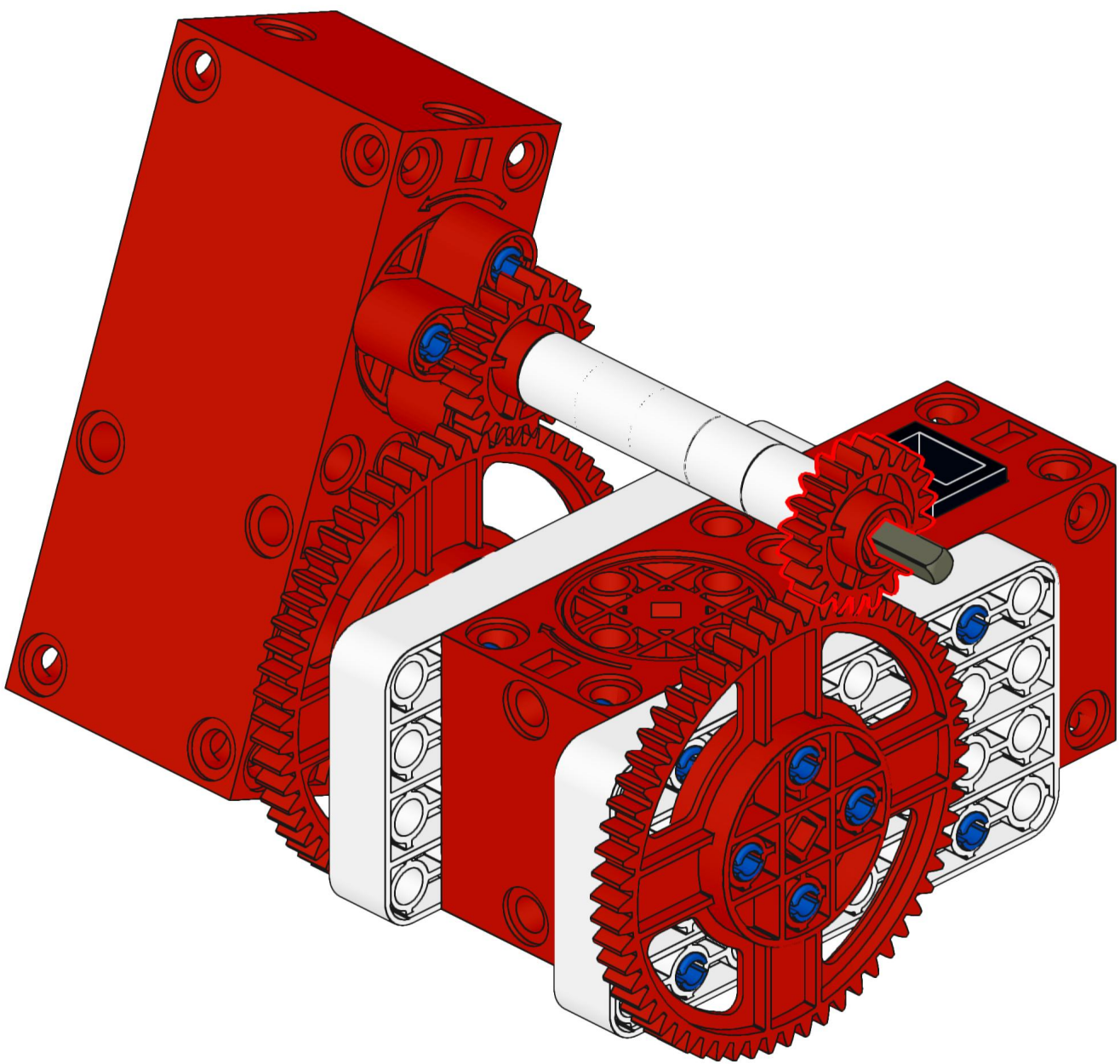

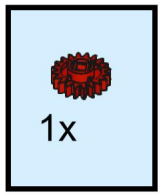

56

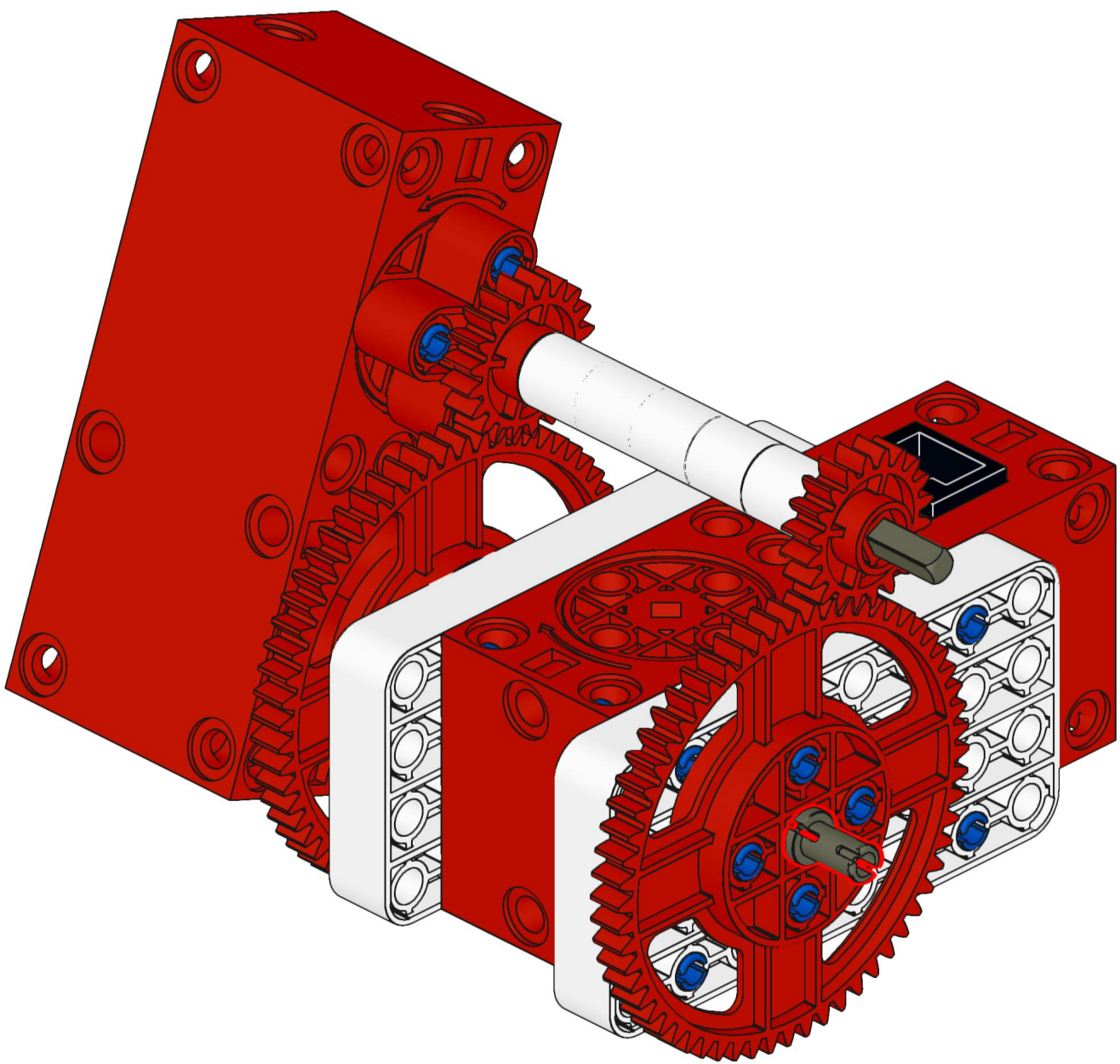

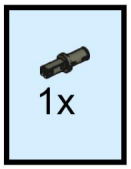

57

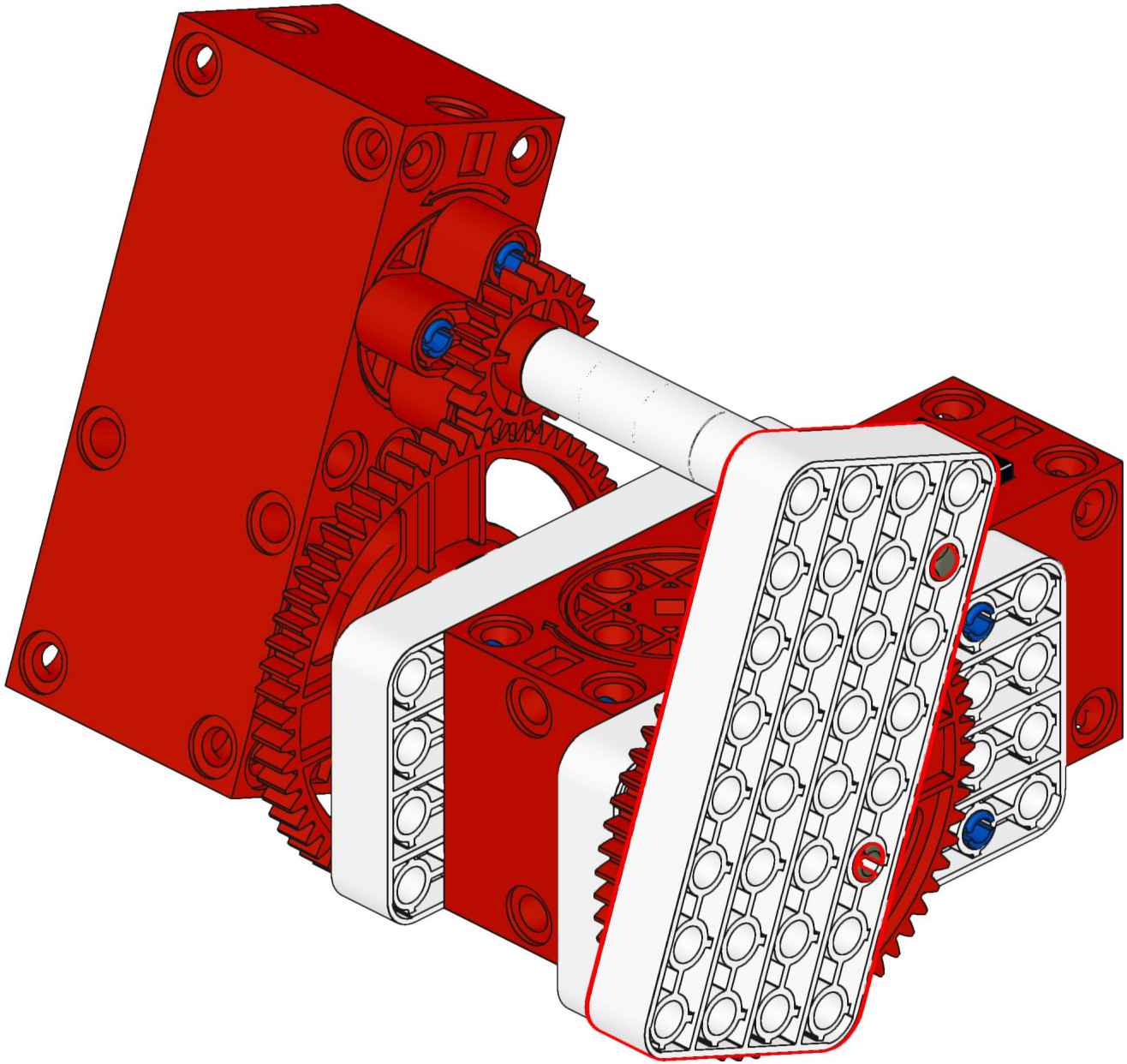

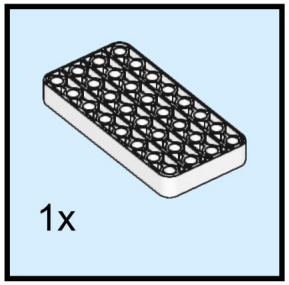

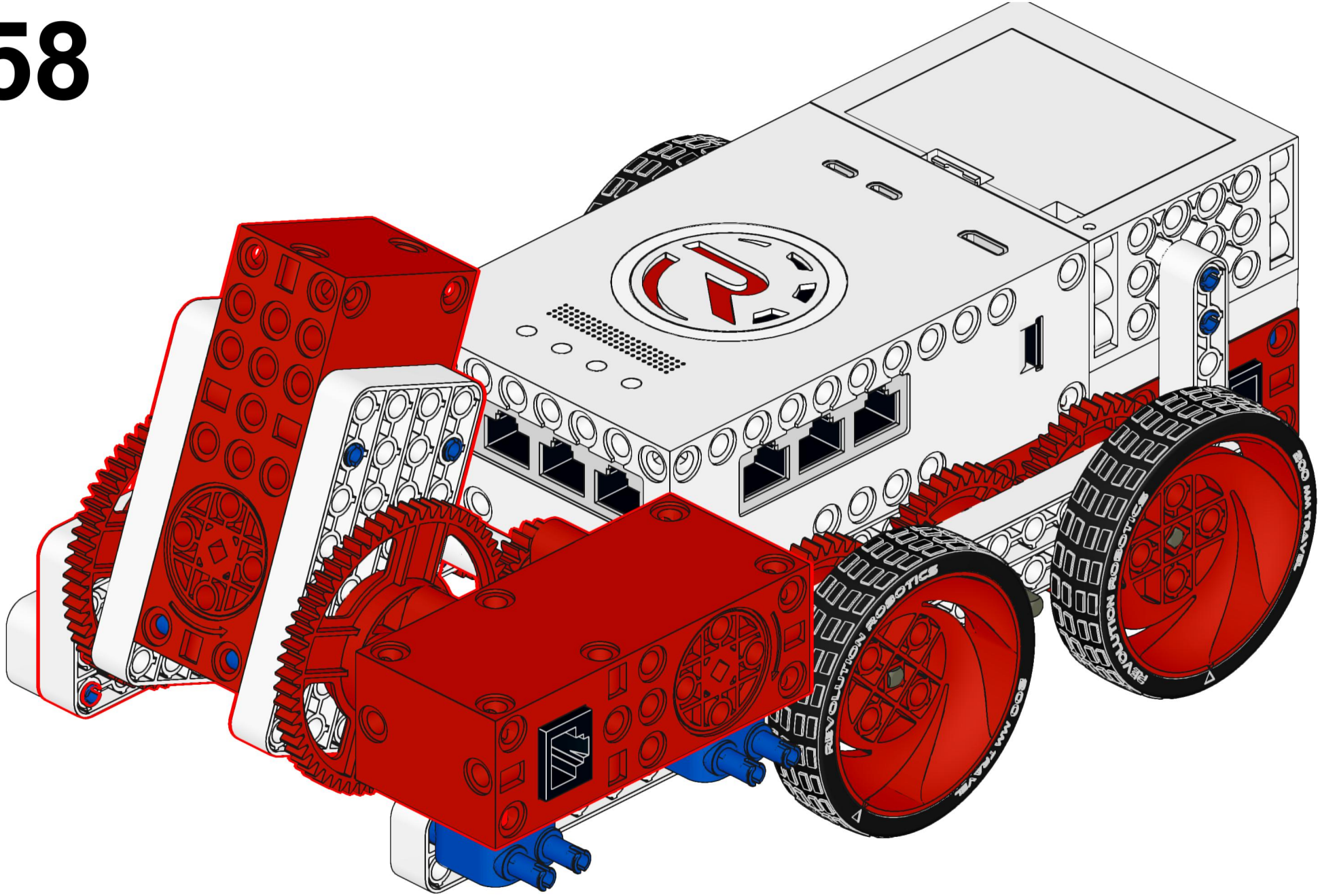
REVOLUTION ROBOTICS
600 MM TRAVEL
REVOLUTION ROBOTICS
600 MM TRAVEL

59

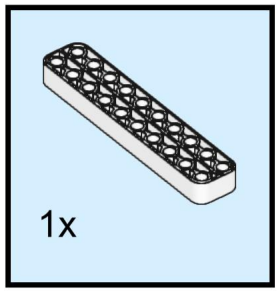

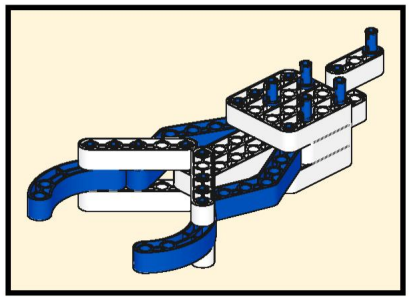

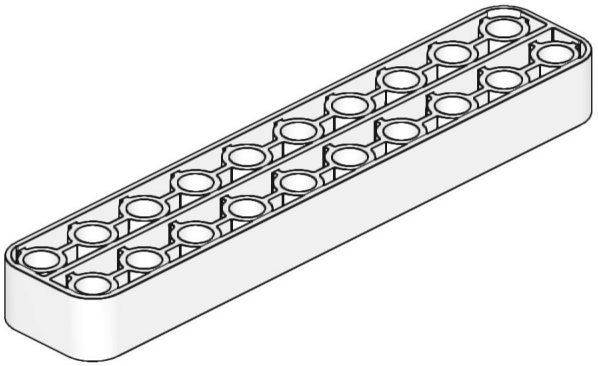

60

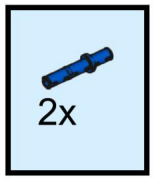

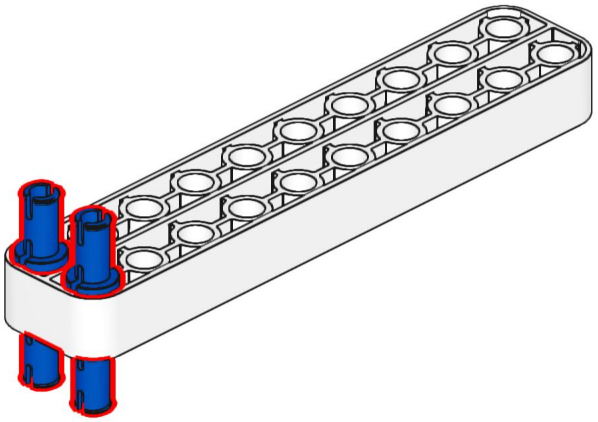

61

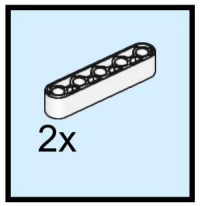

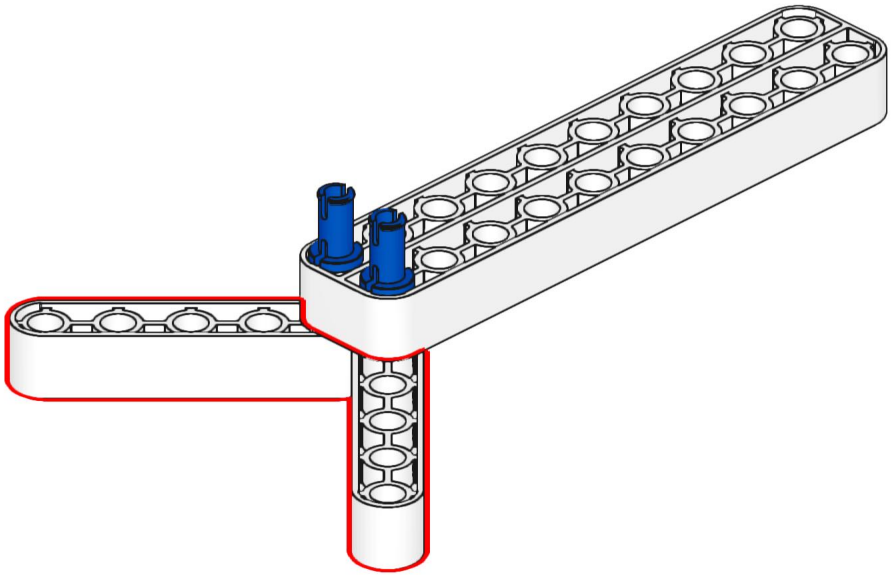

62

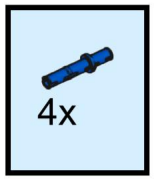

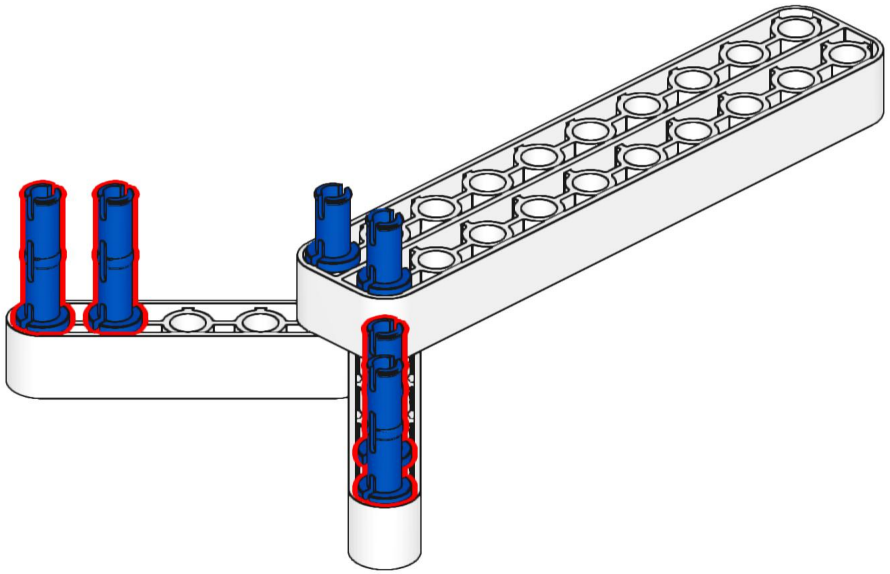

63

2x

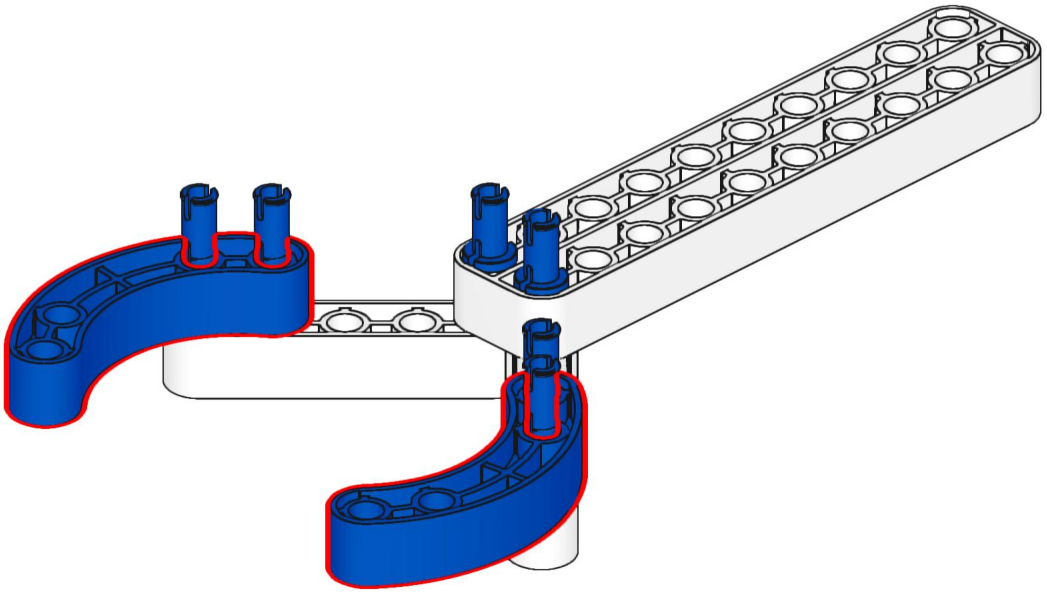

64

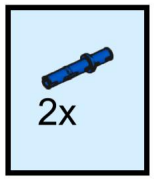

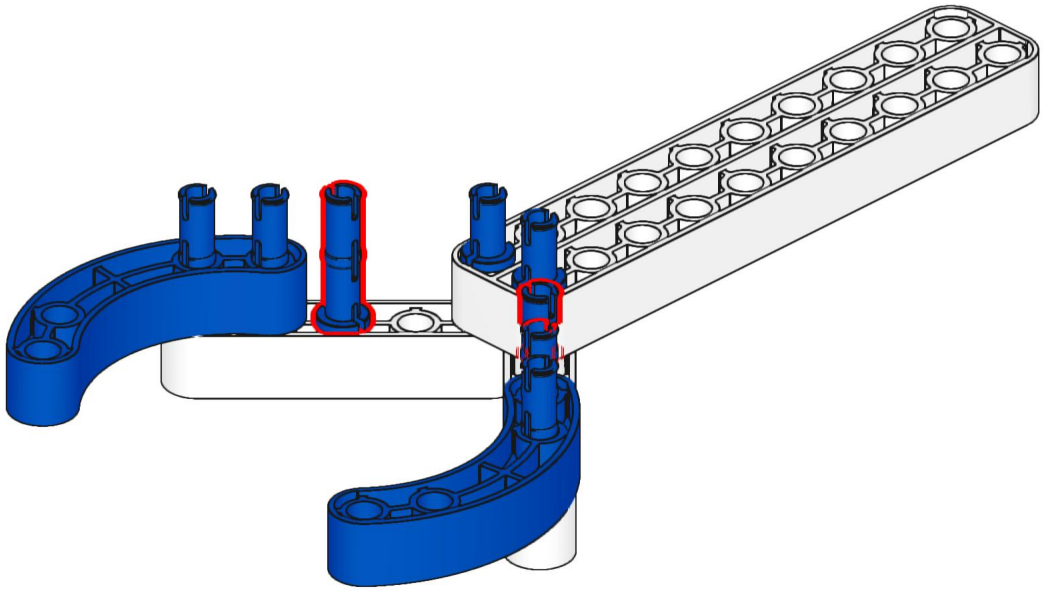

65

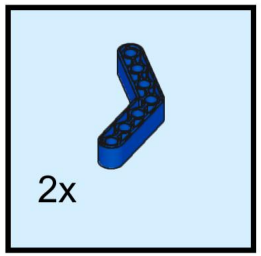

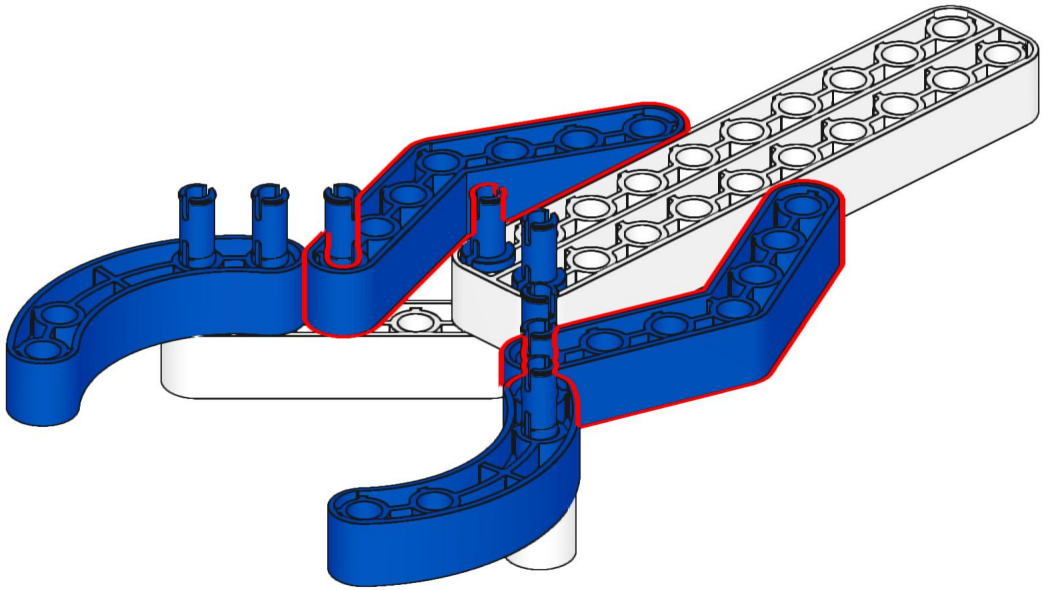

66

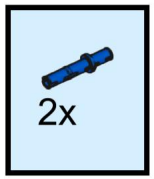

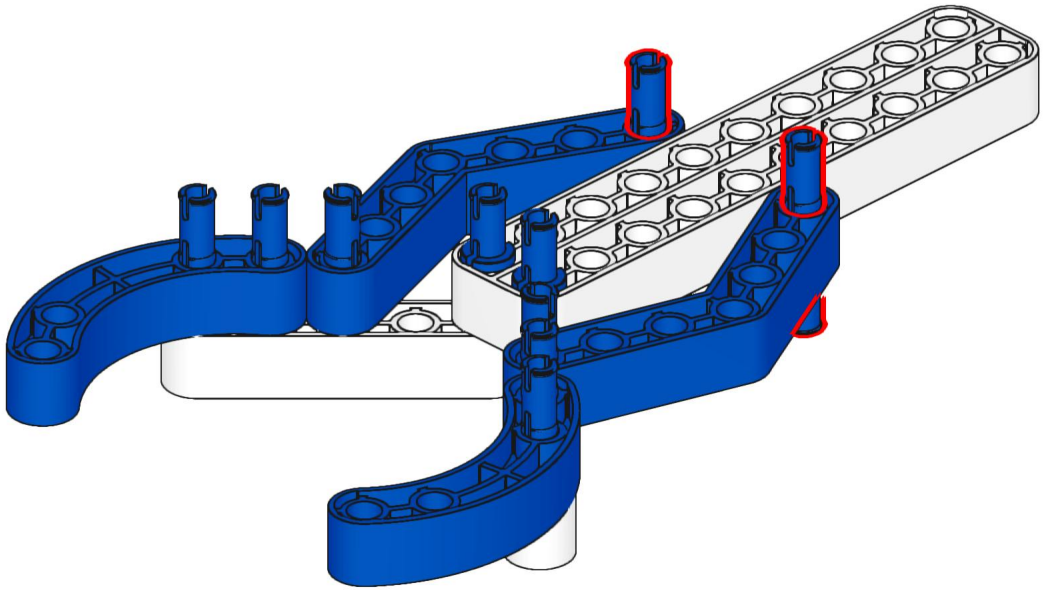

67

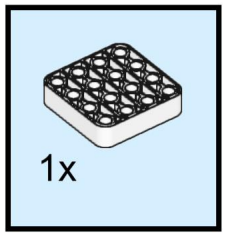

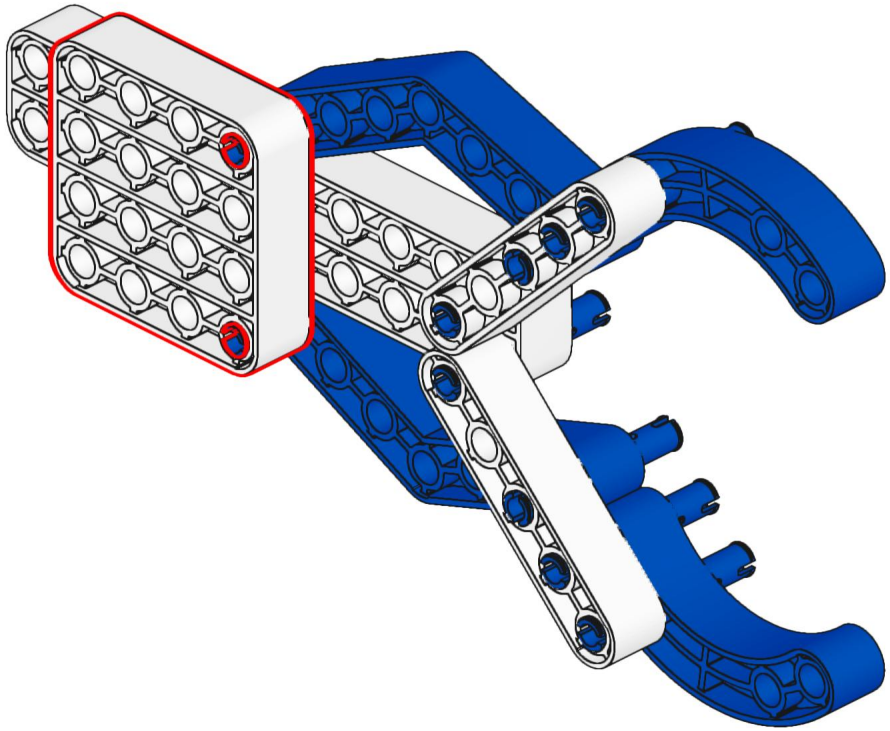

68

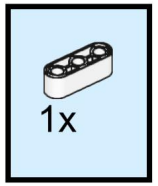

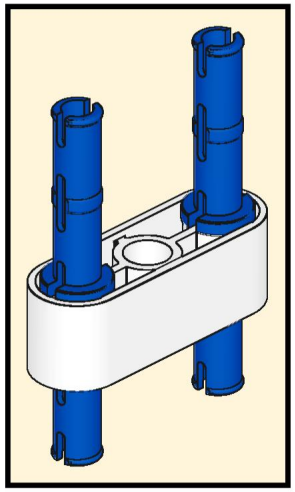

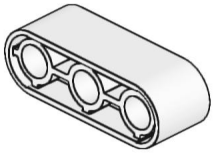

69

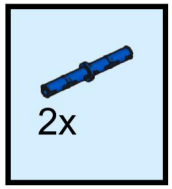

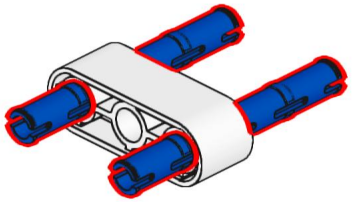

70

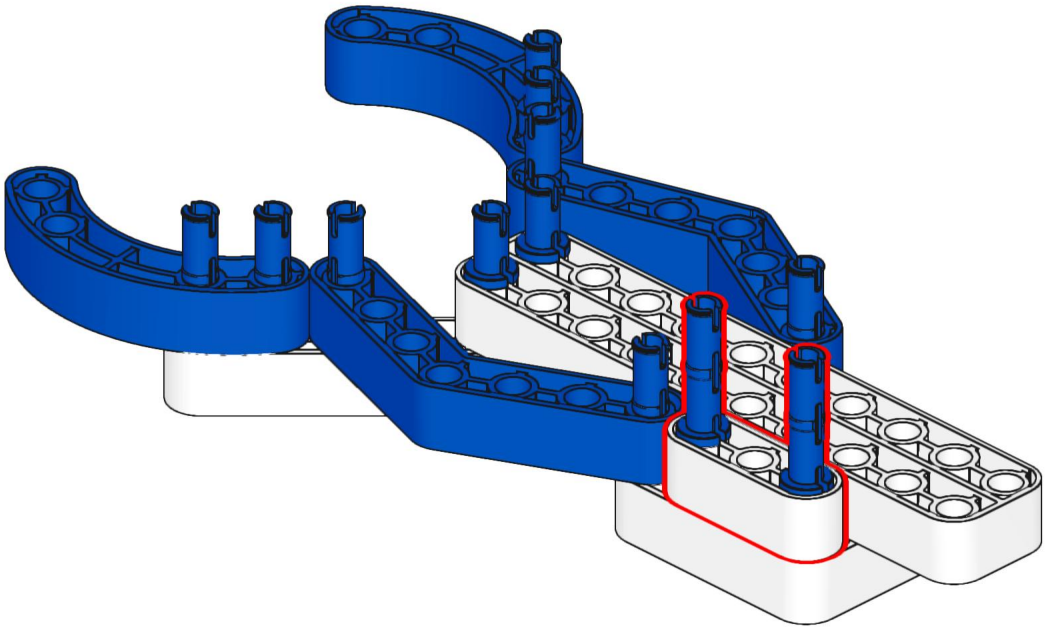

71

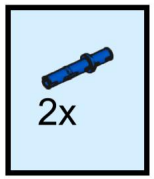

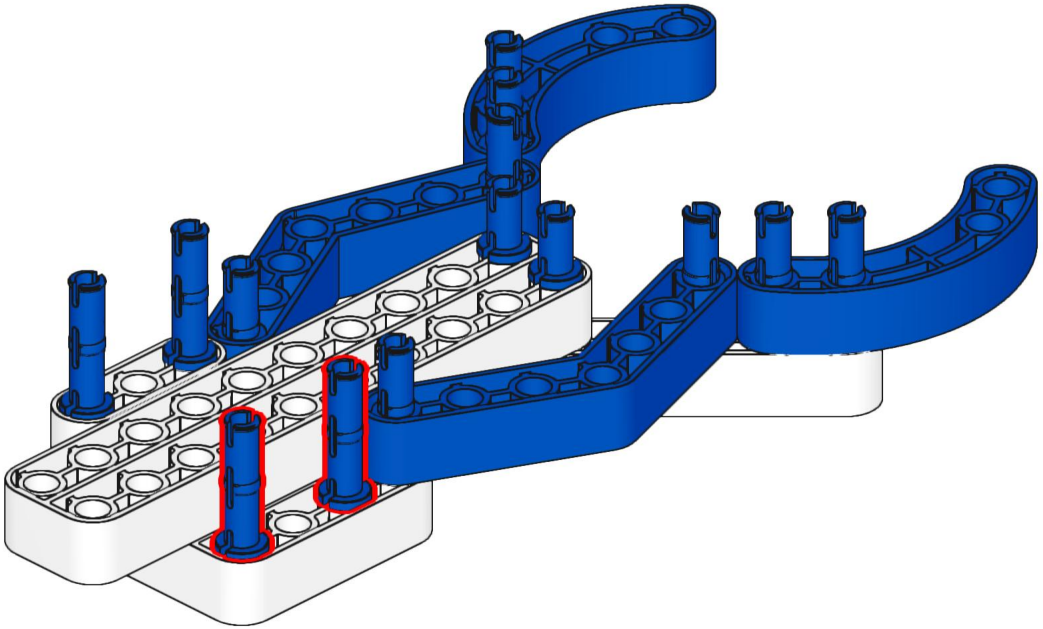

72

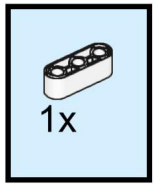

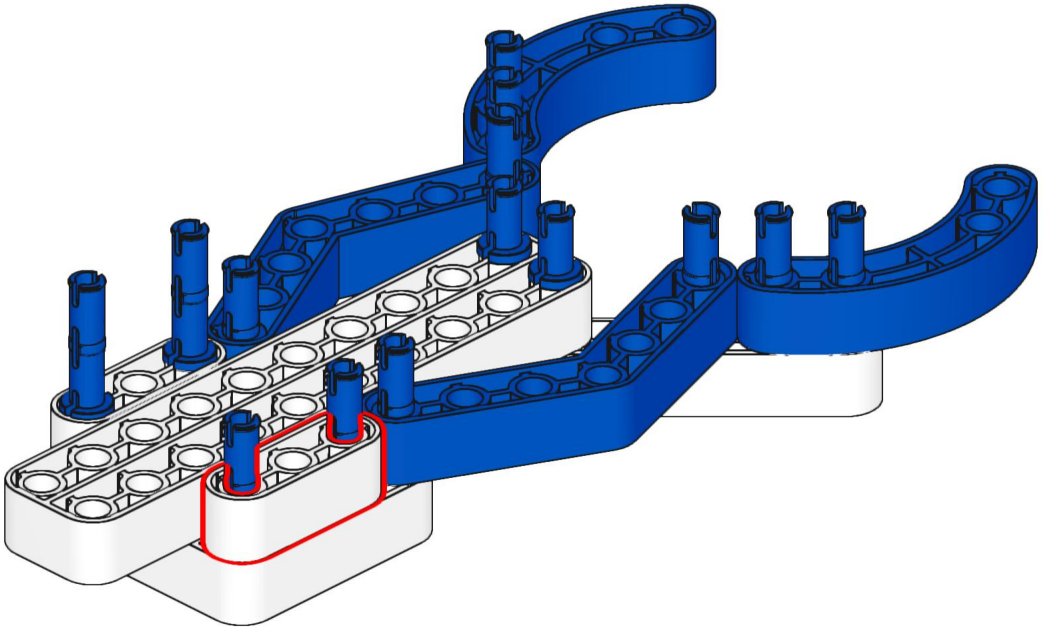

73

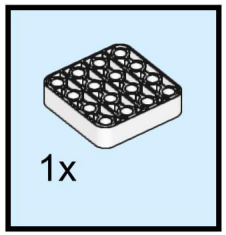

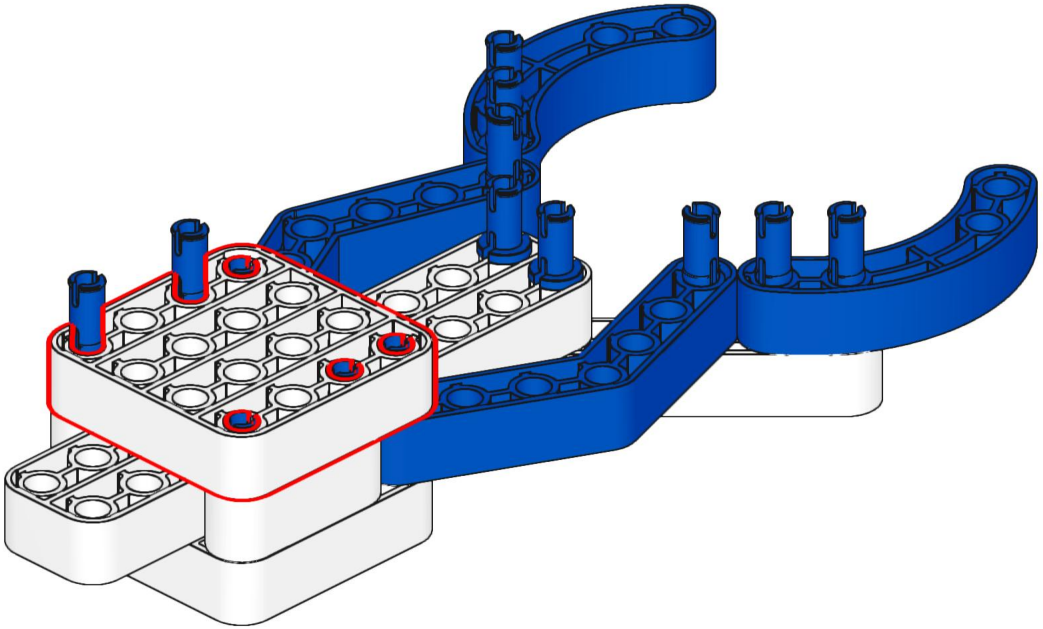

74

2x

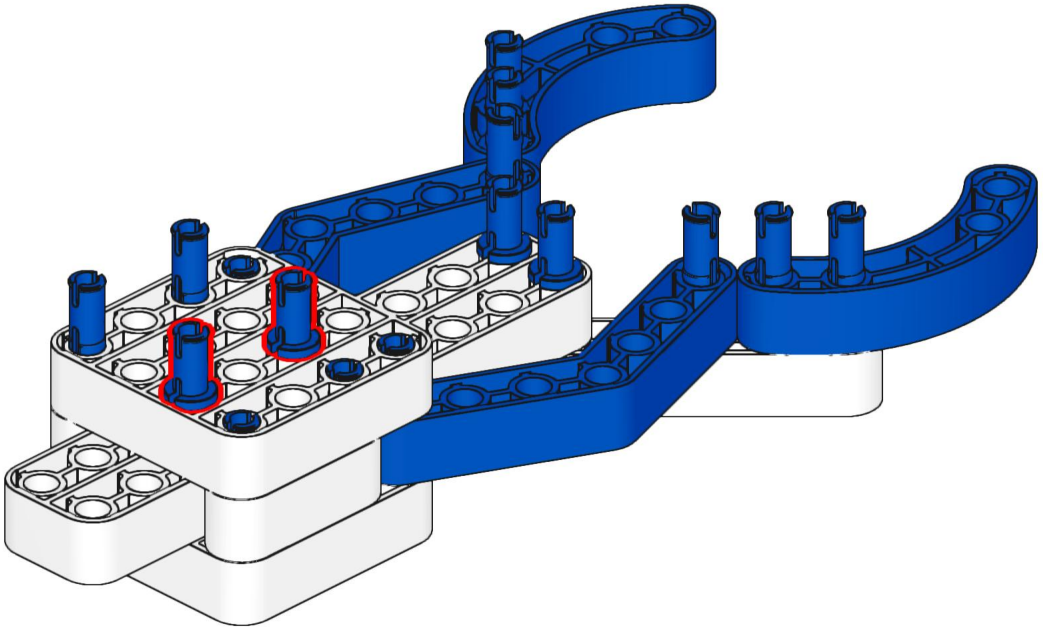

75

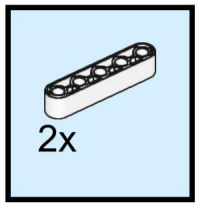

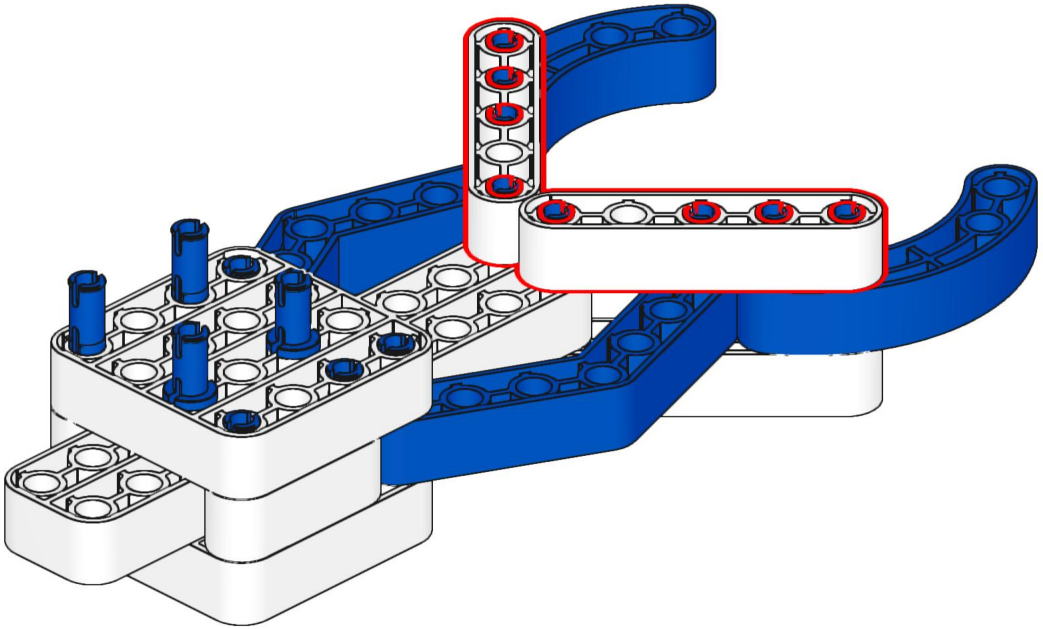

76

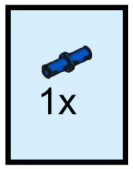

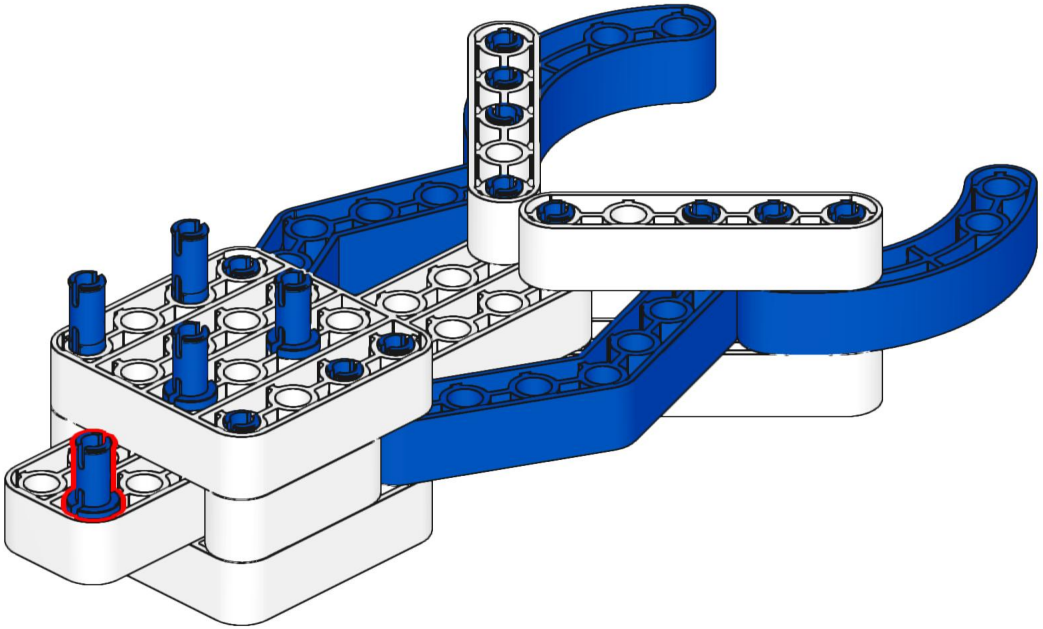

77

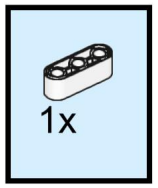

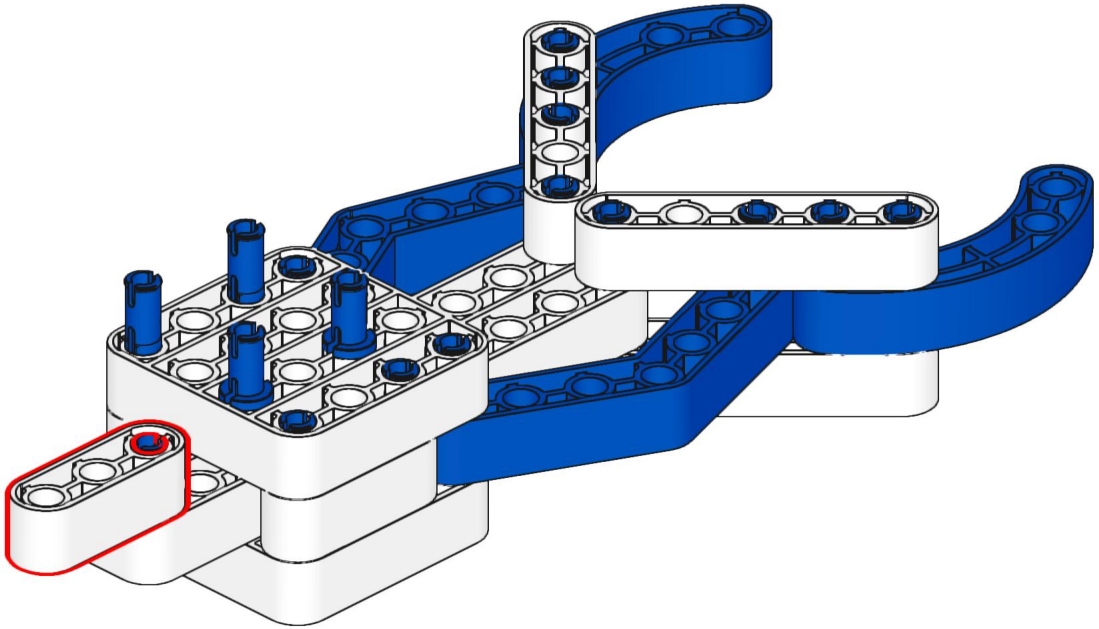

78

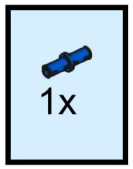

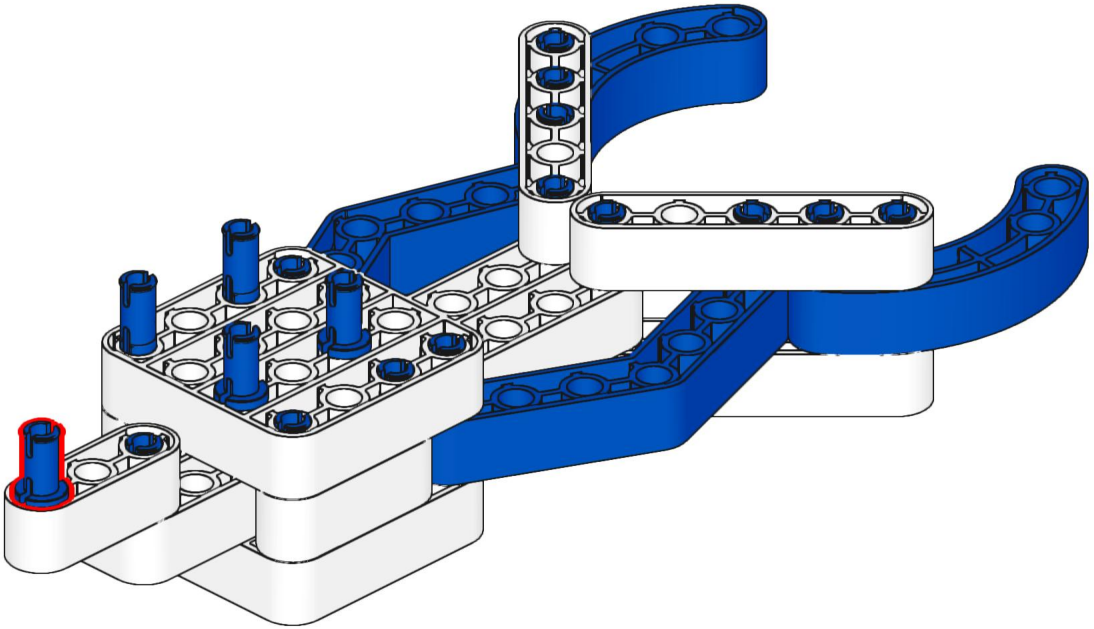

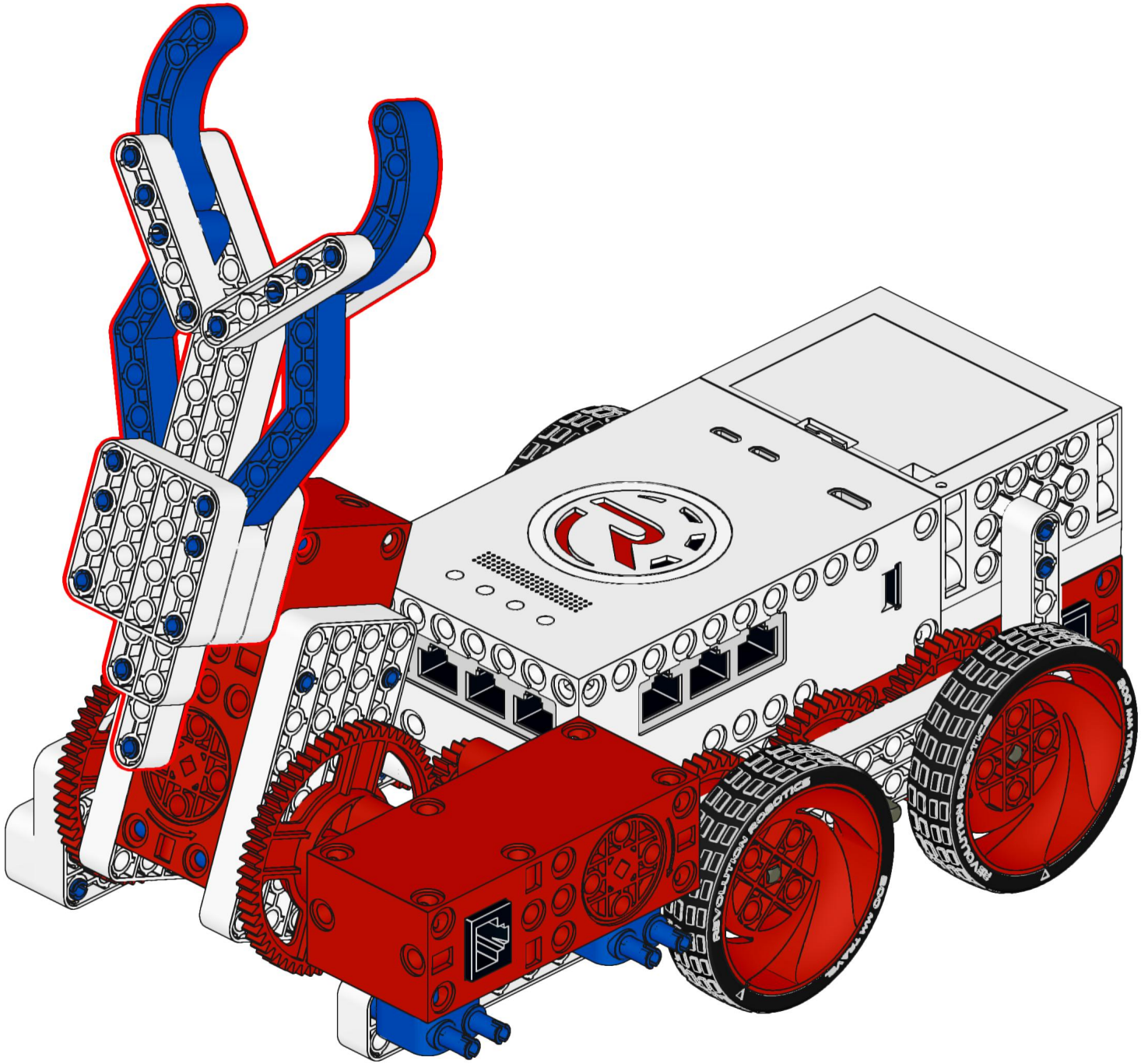
REVOLUTION ROBOTICS
REVOLUTION ROBOTICS

80

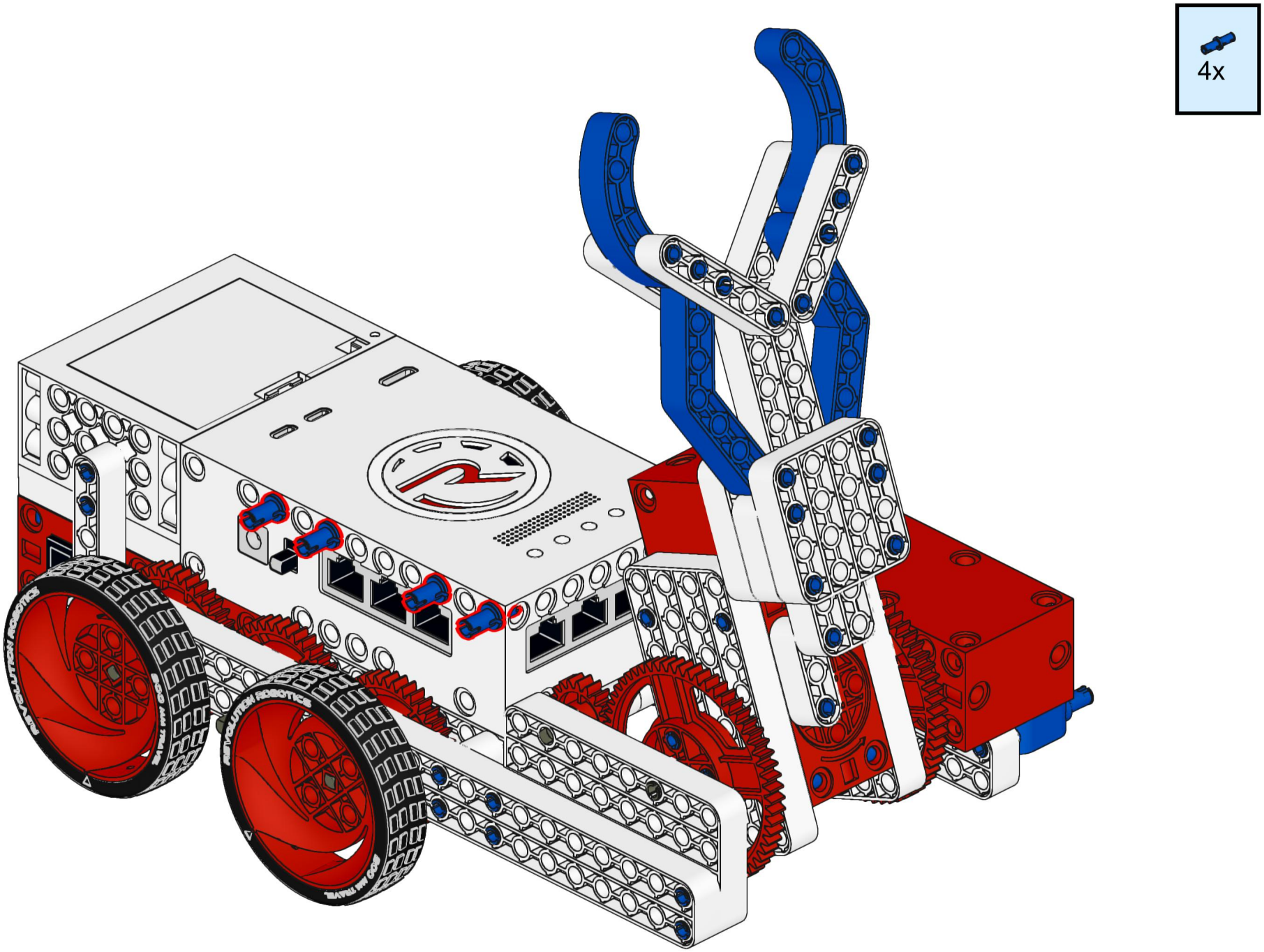

81

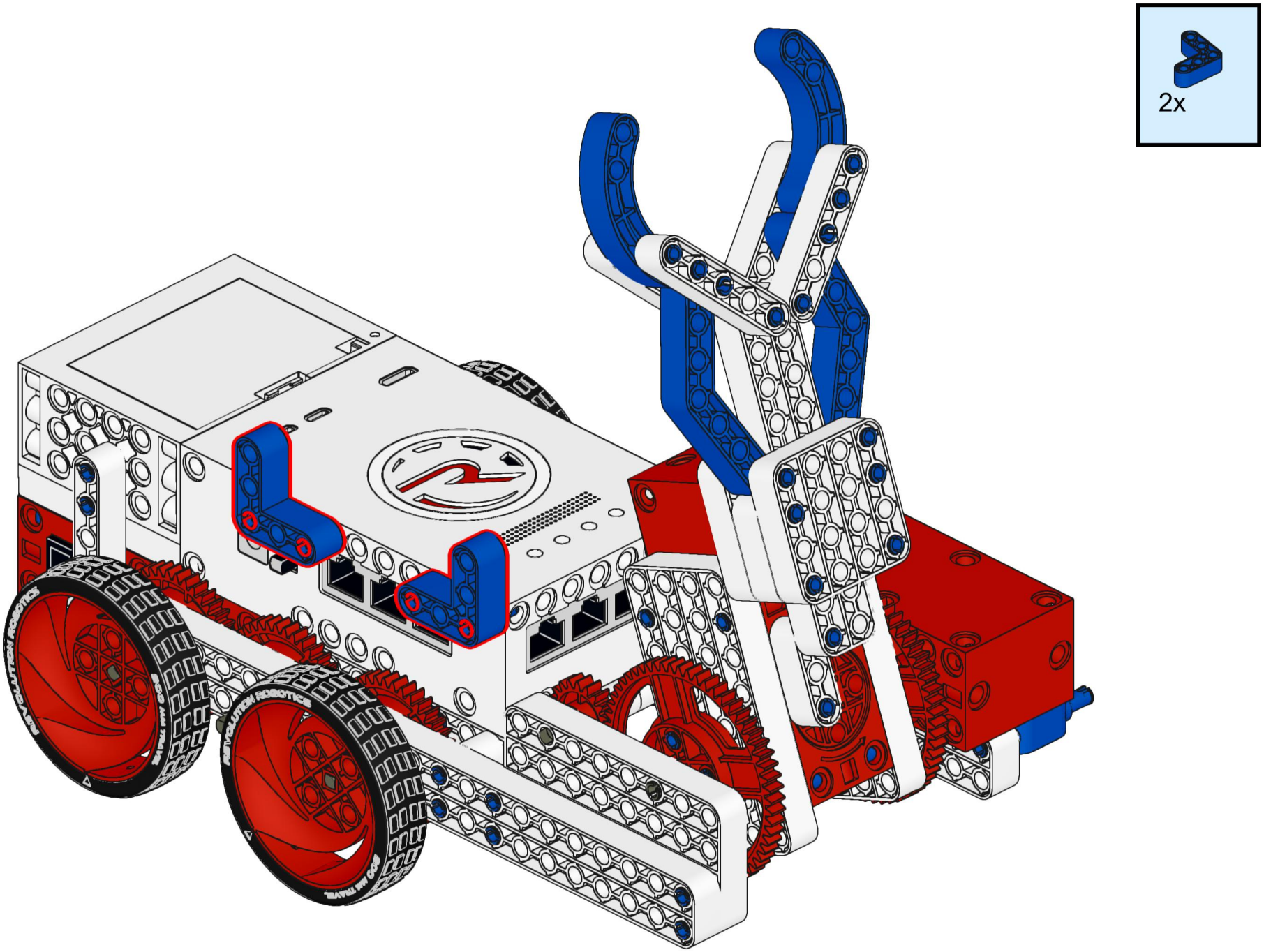

82

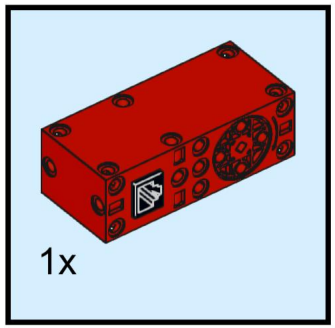

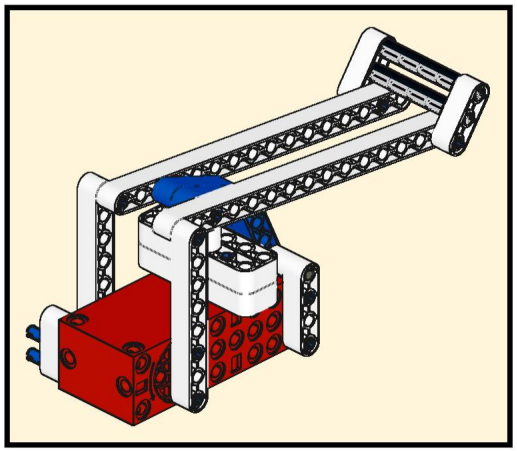

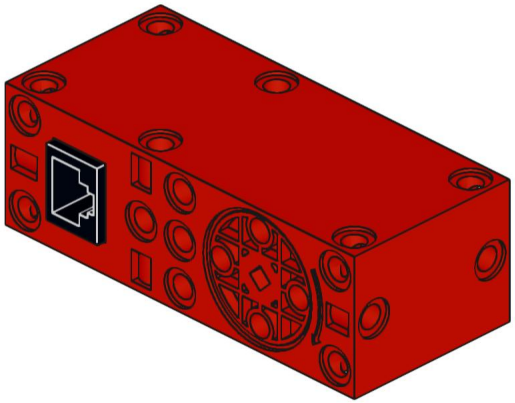

83

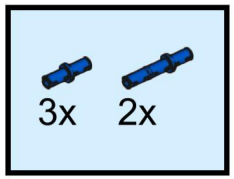

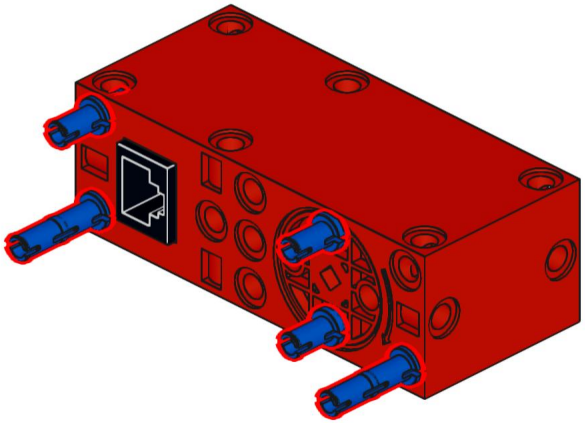

84

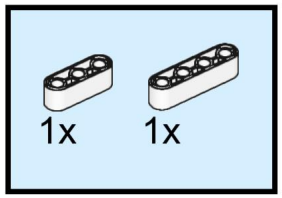

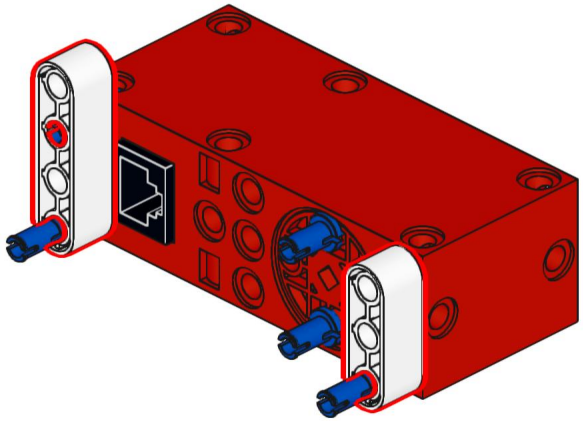

85

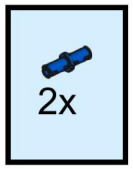

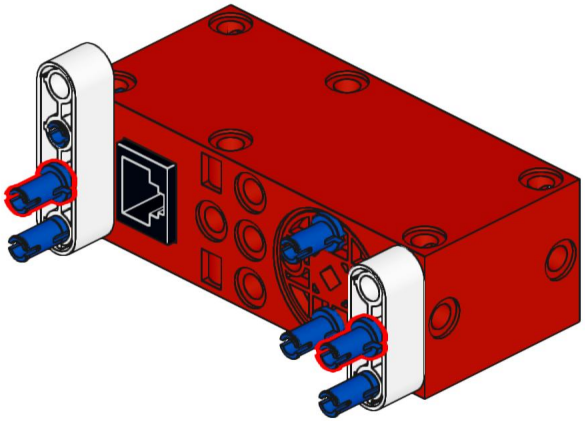

86

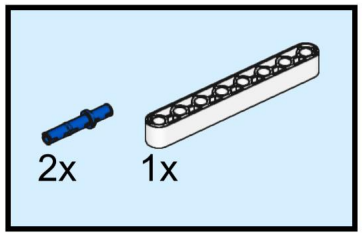

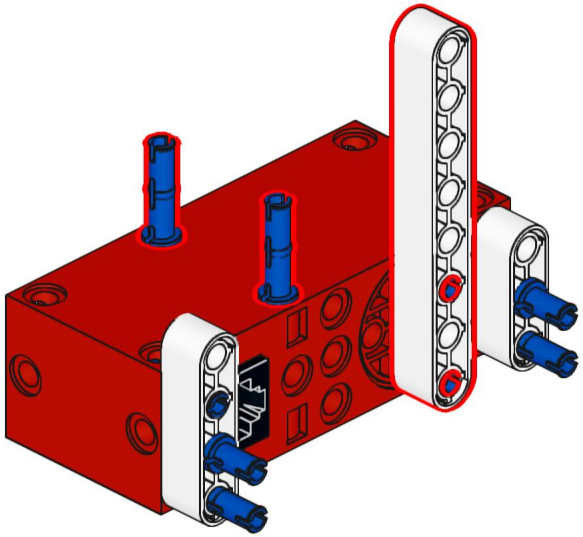

87

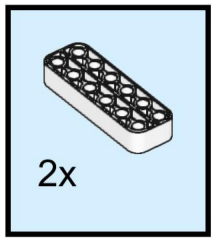

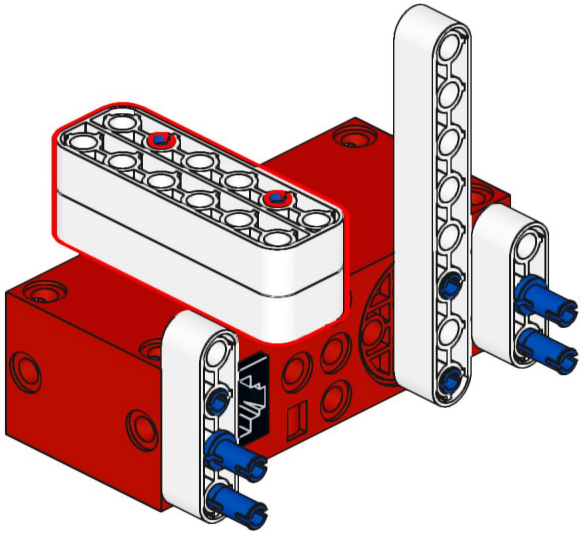

88

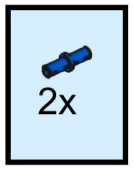

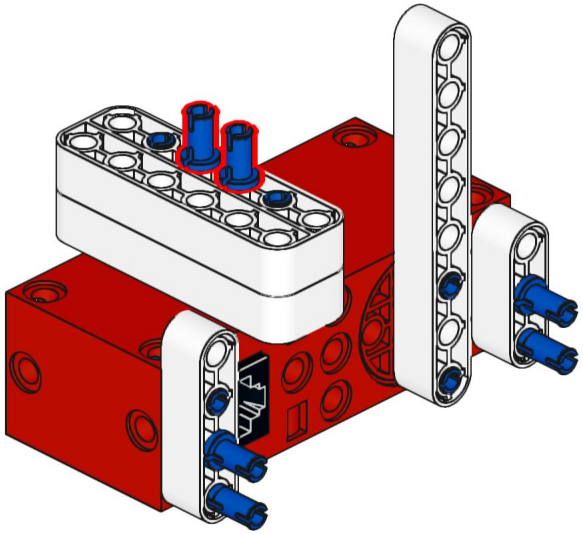

89

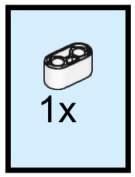

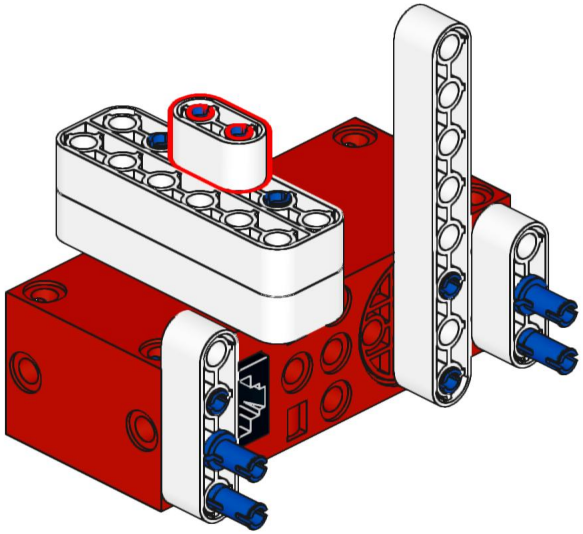

90

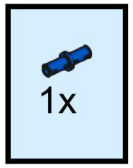

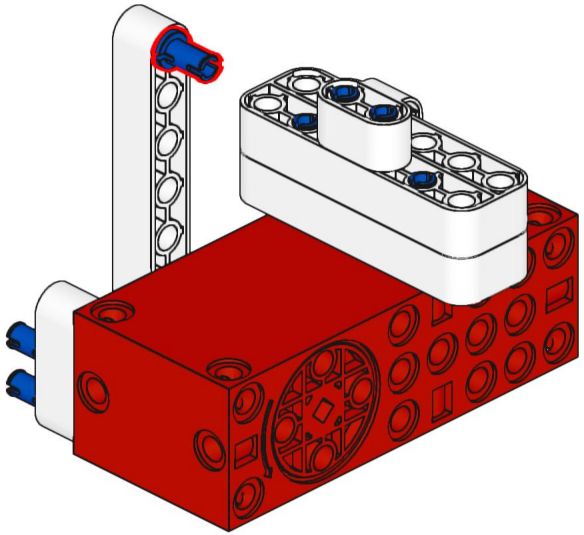

91

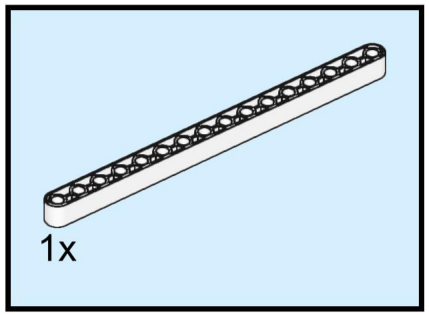

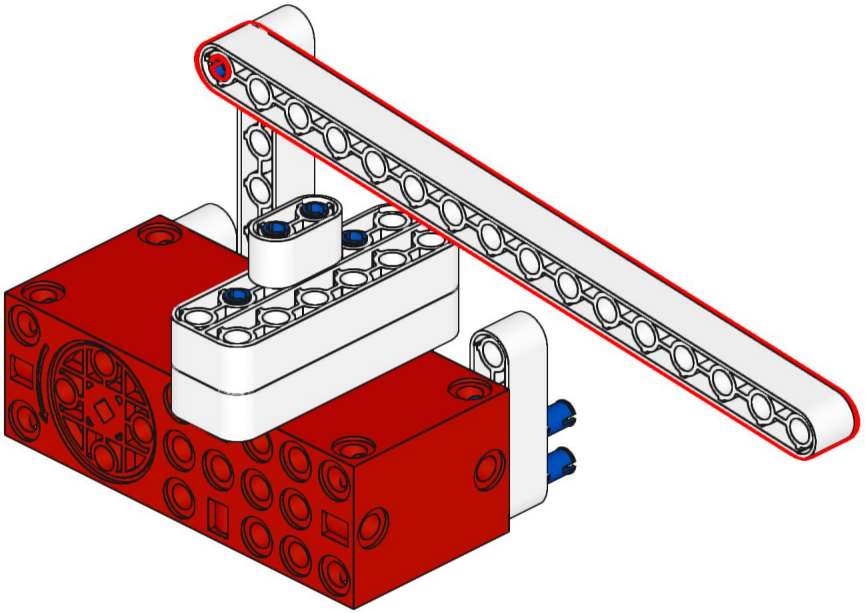

92

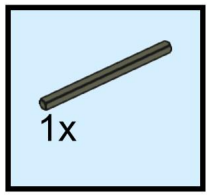

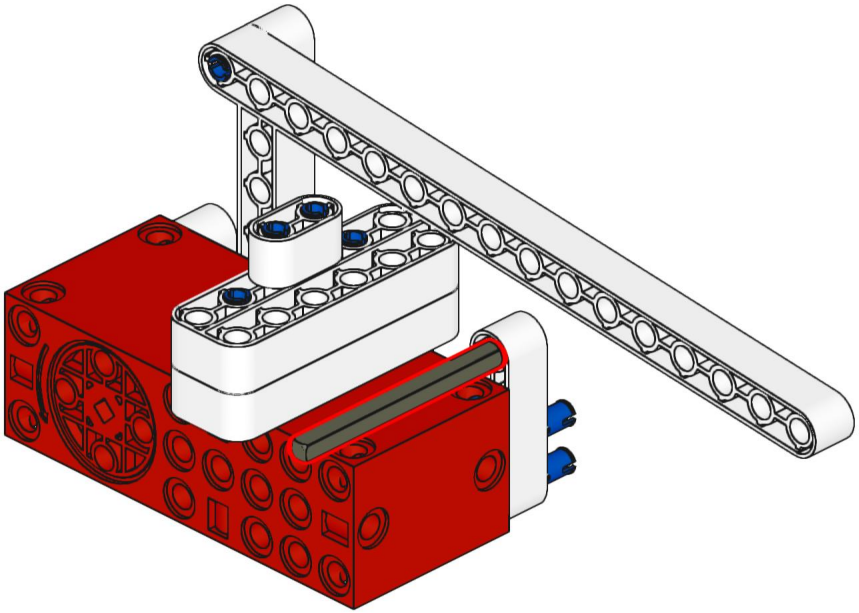

93

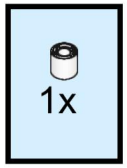

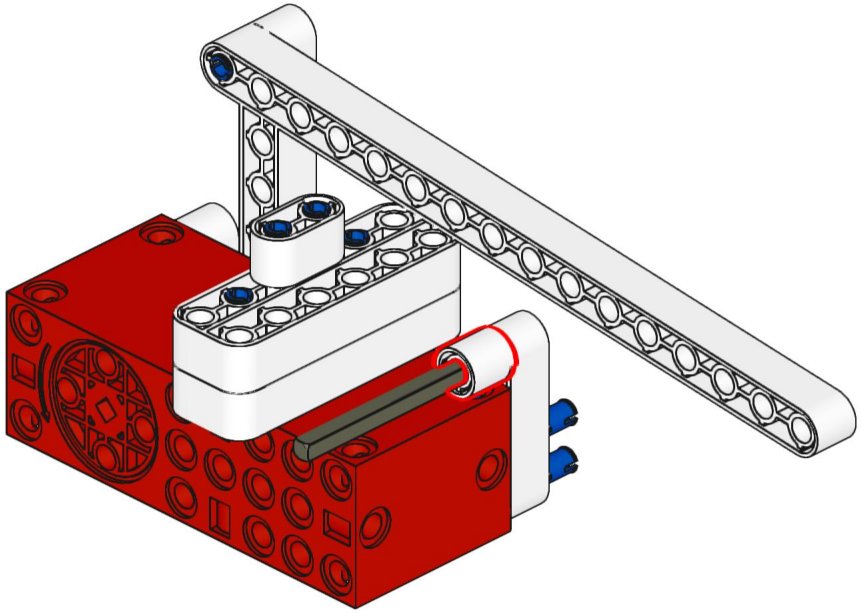

94

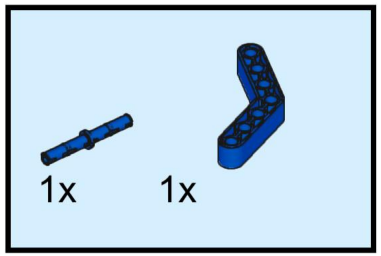

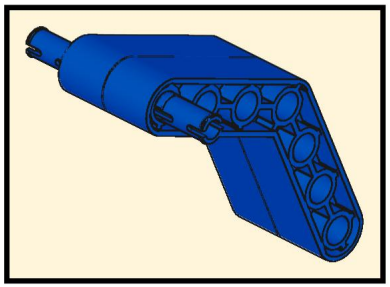

95

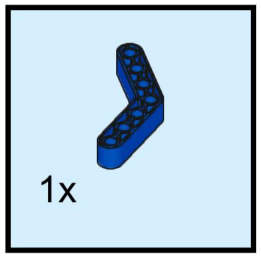

96

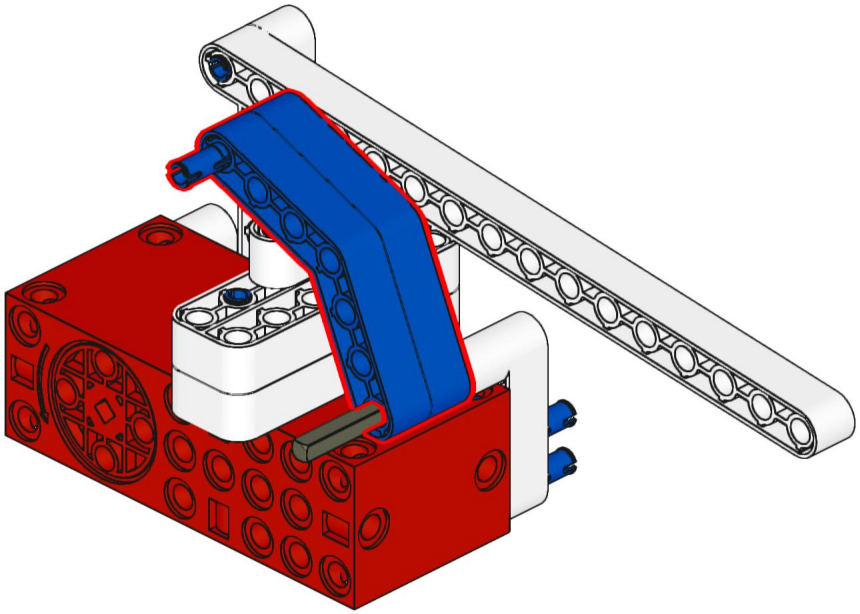

97

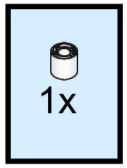

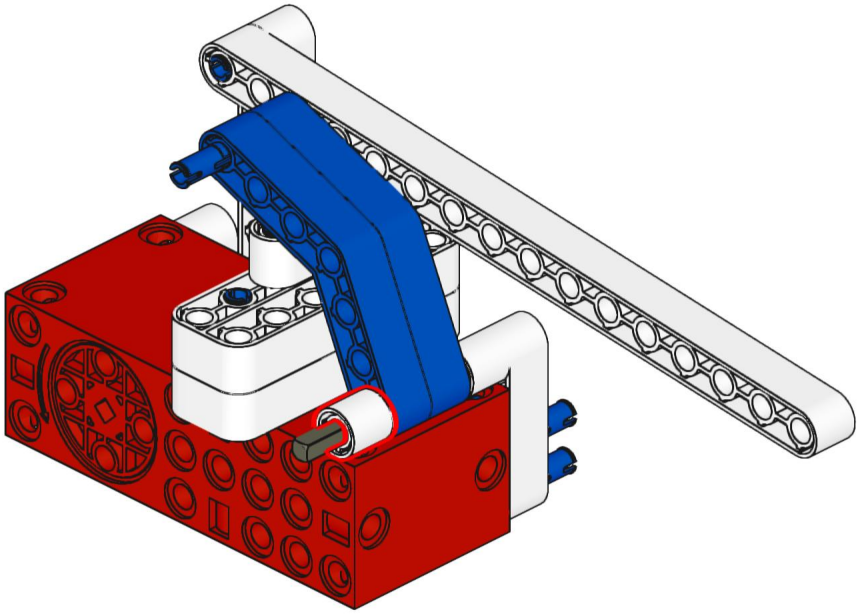

98

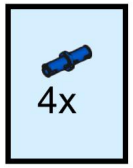

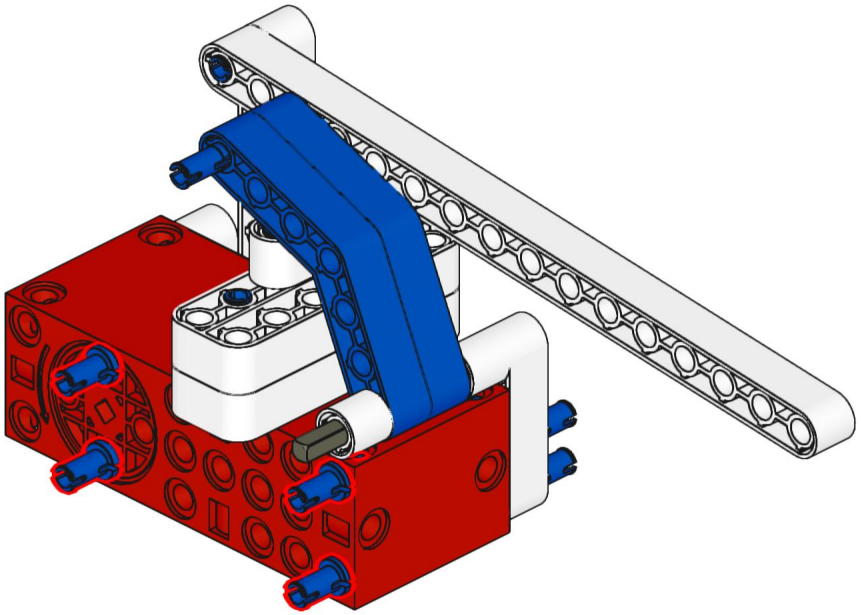

99

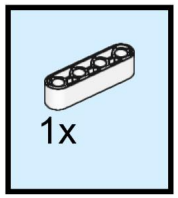

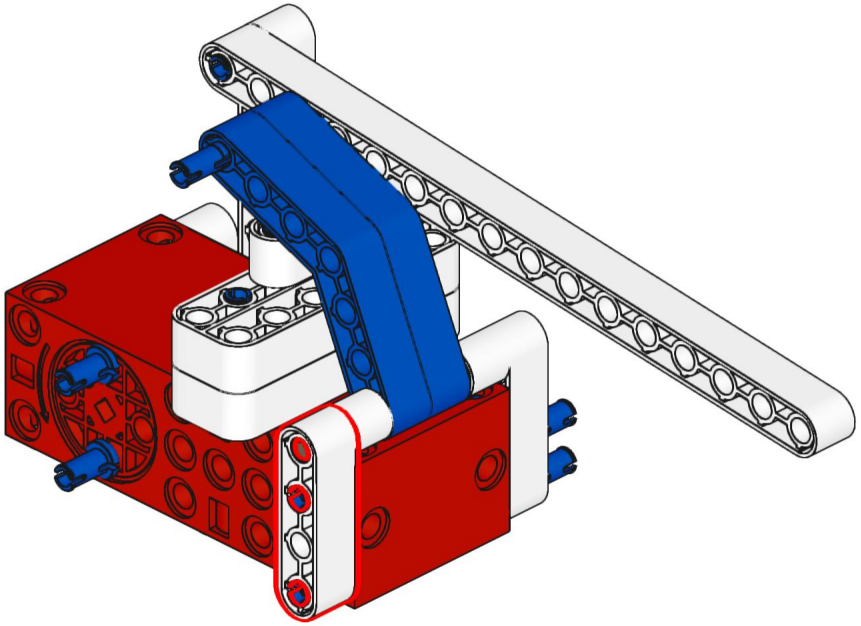

100

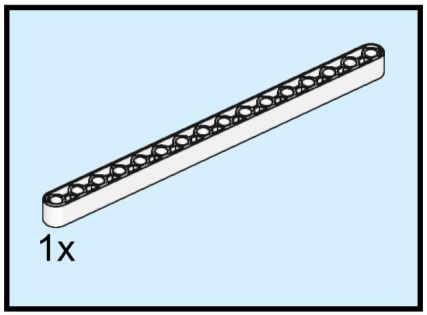

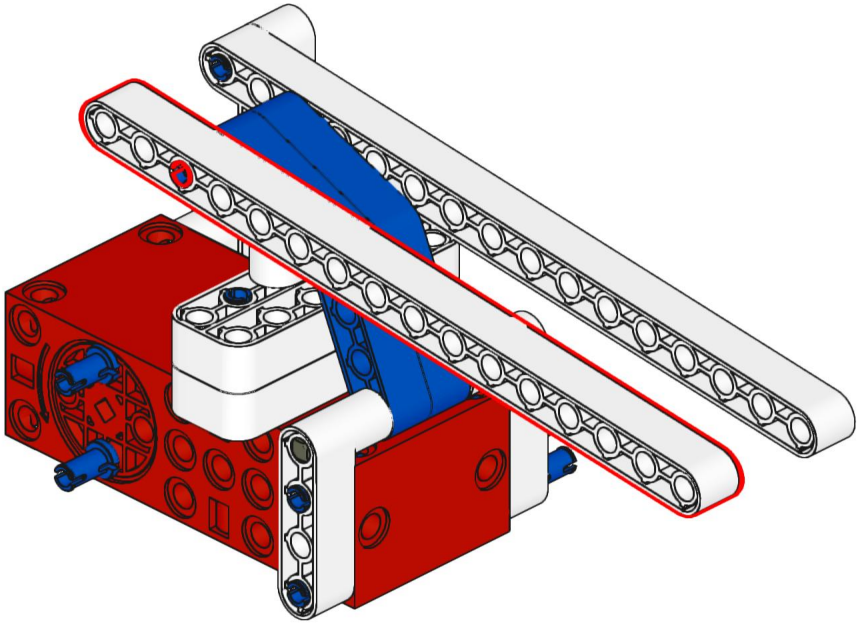

101

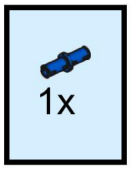

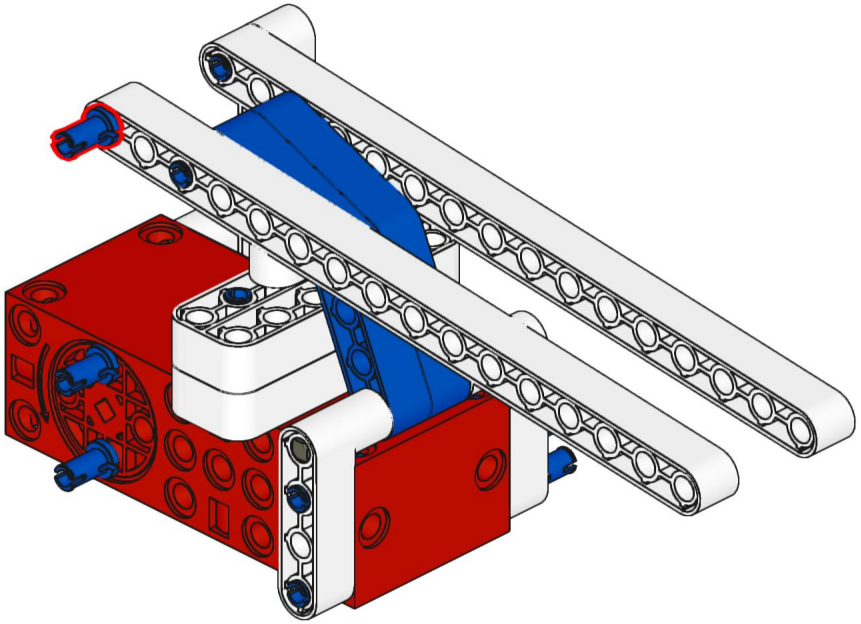

102

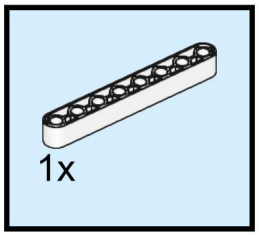

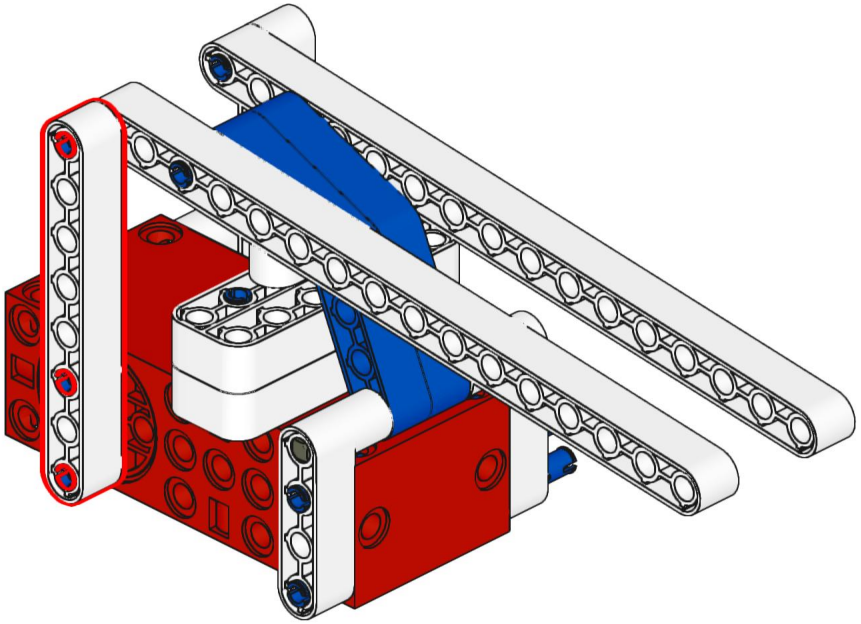

103

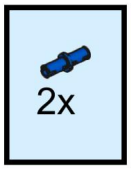

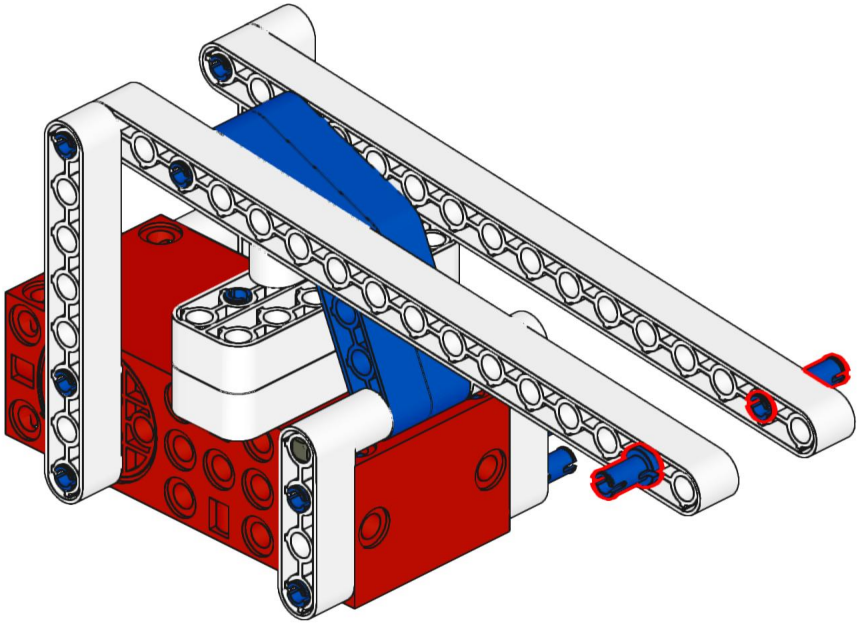

104

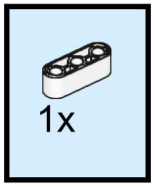

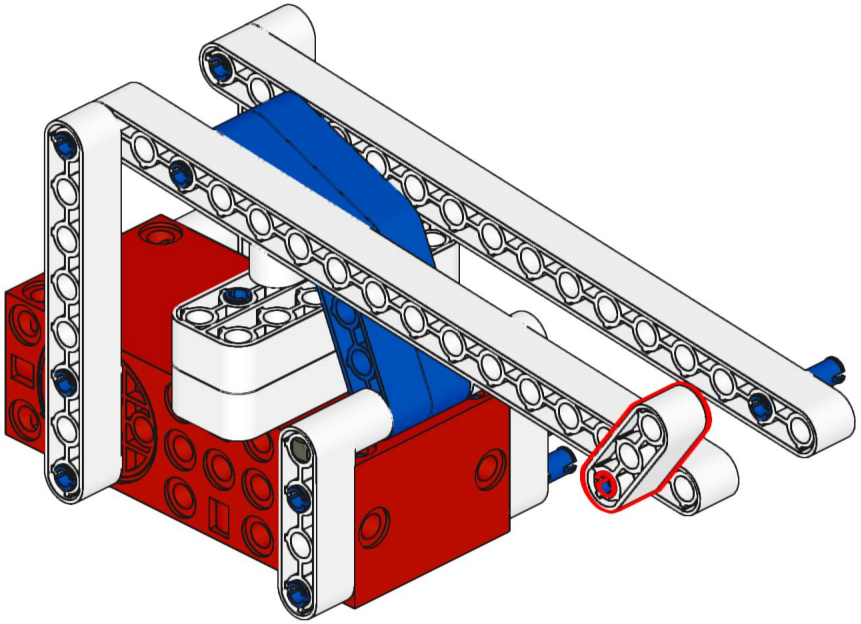

105

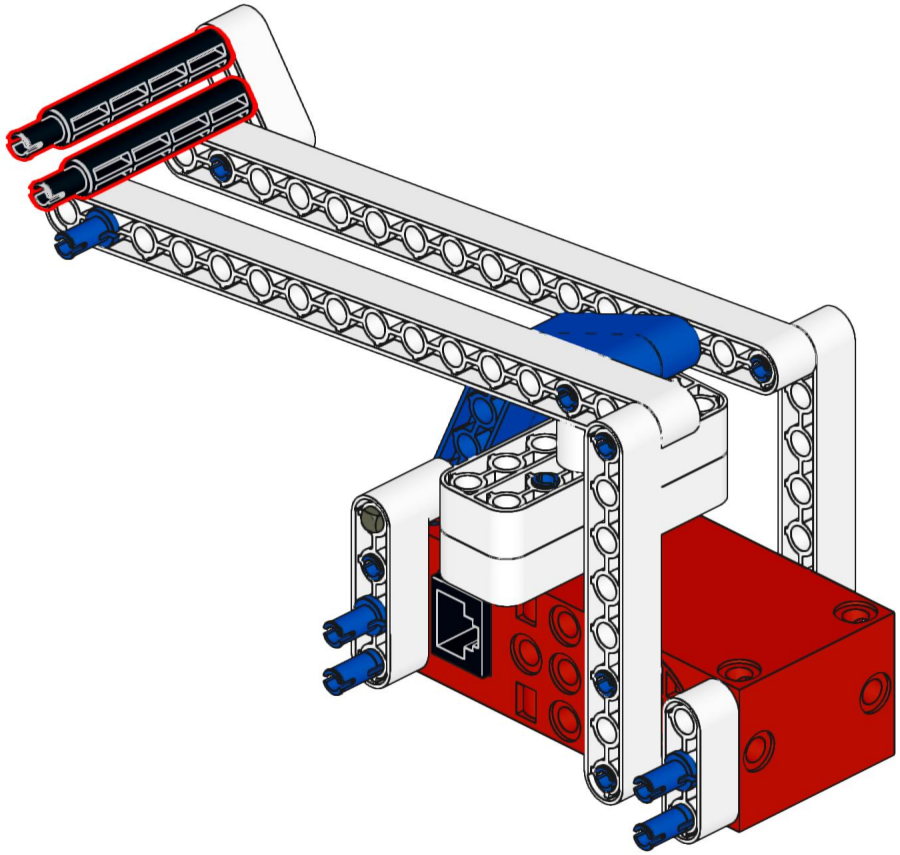

106

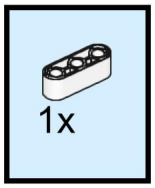

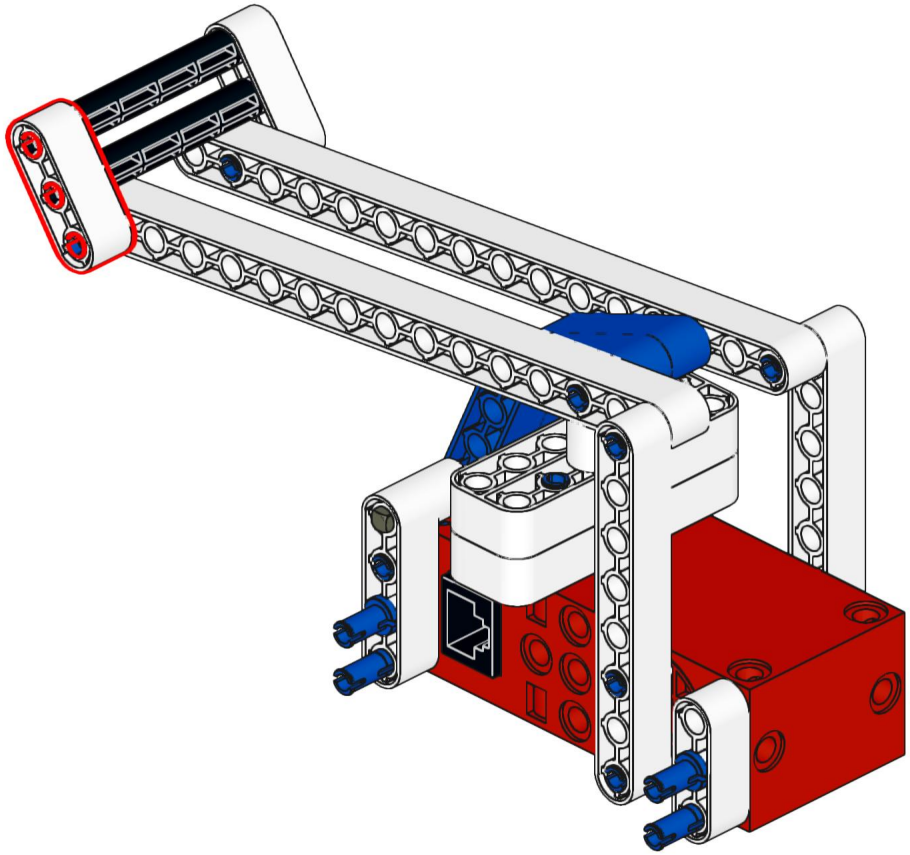

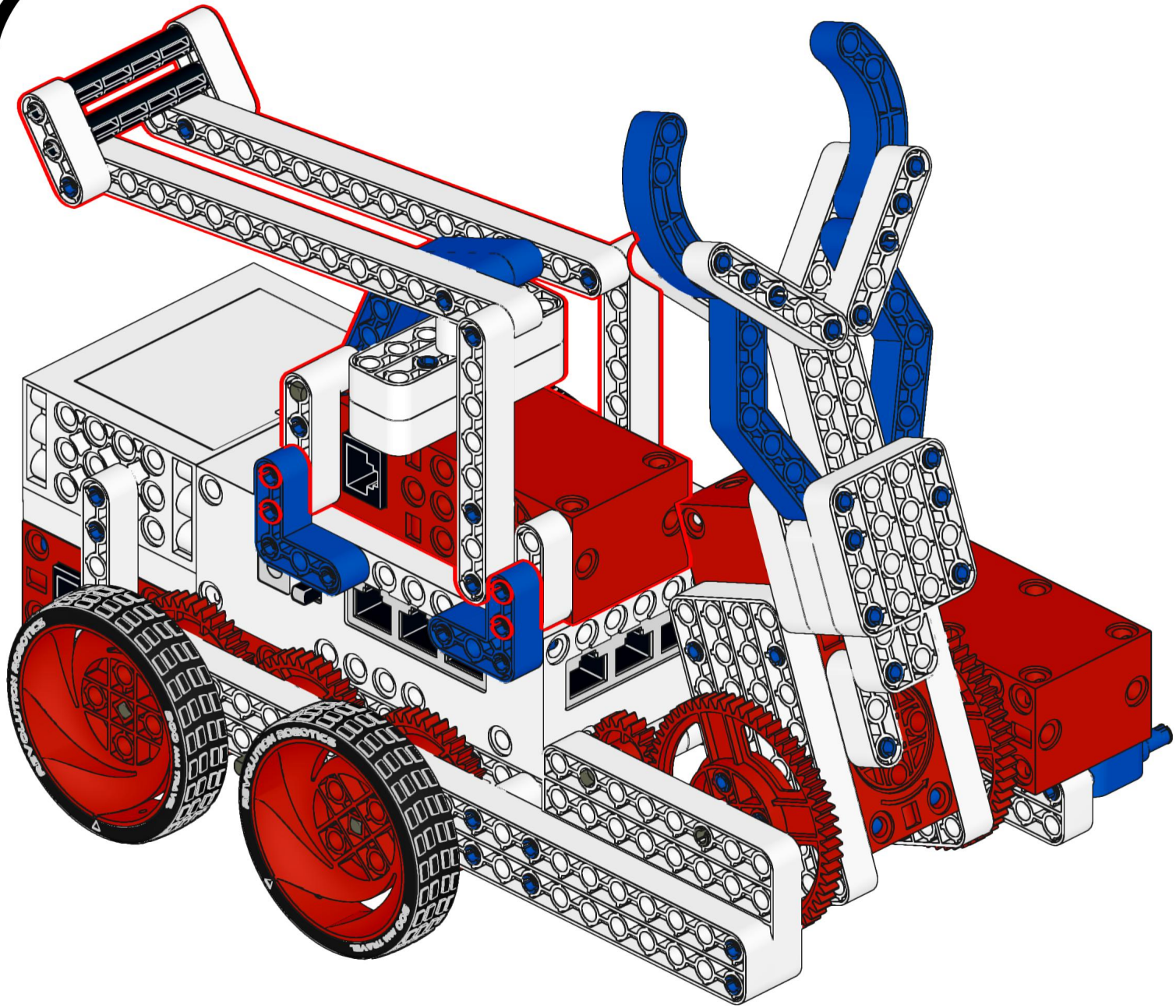
REVOLUTION ROBOTICS
REVOLUTION ROBOTICS

108

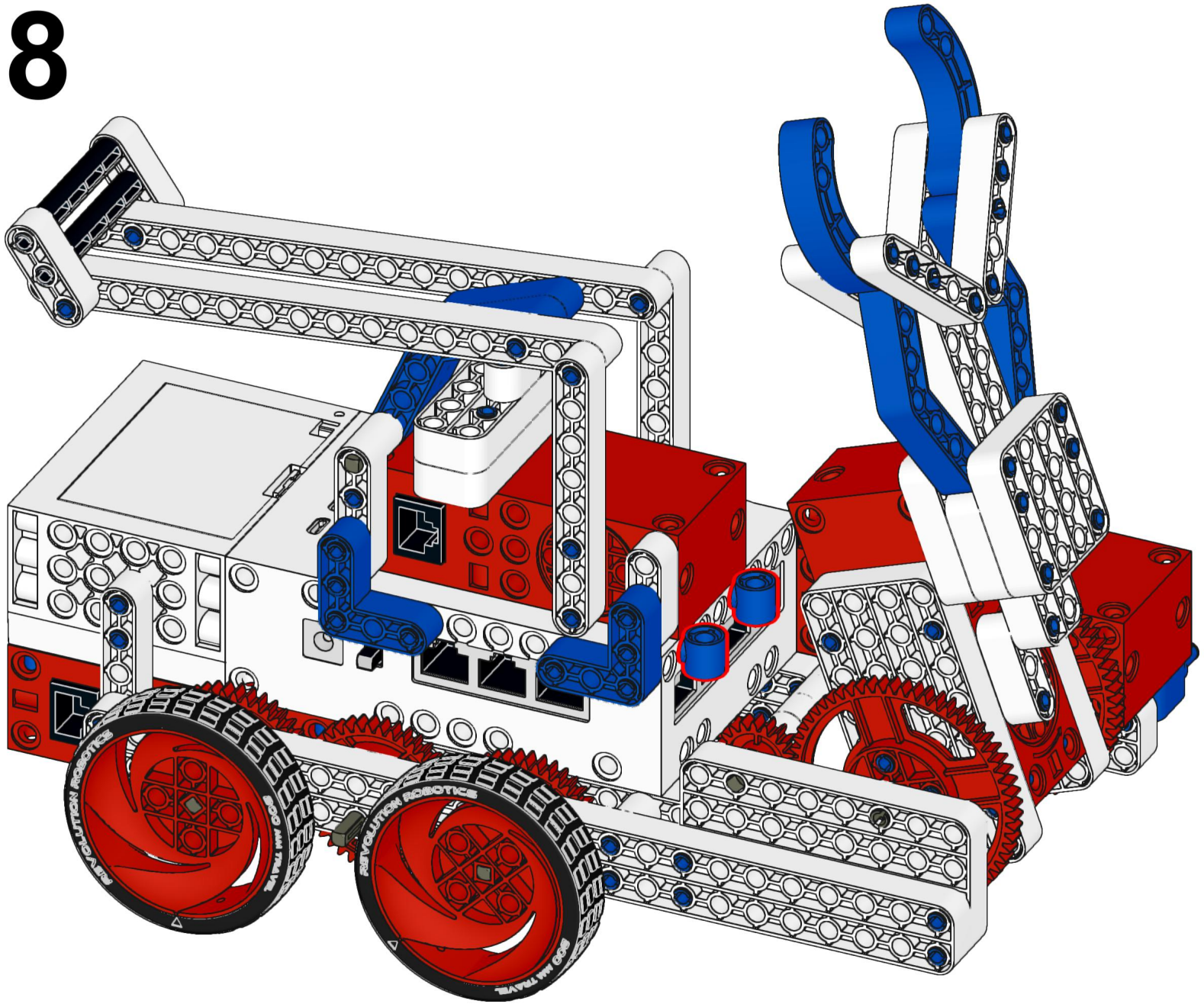

2x

109

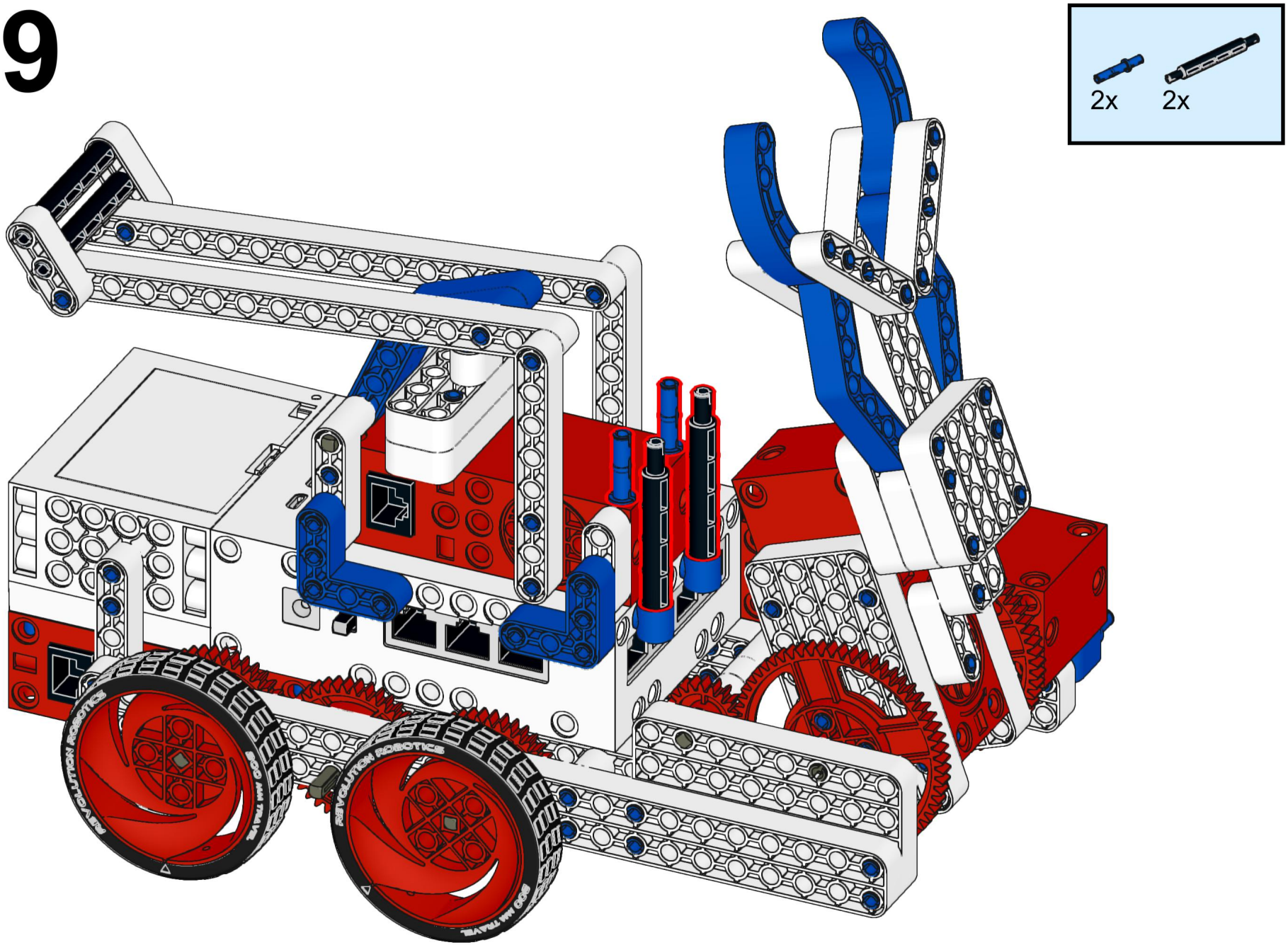

110

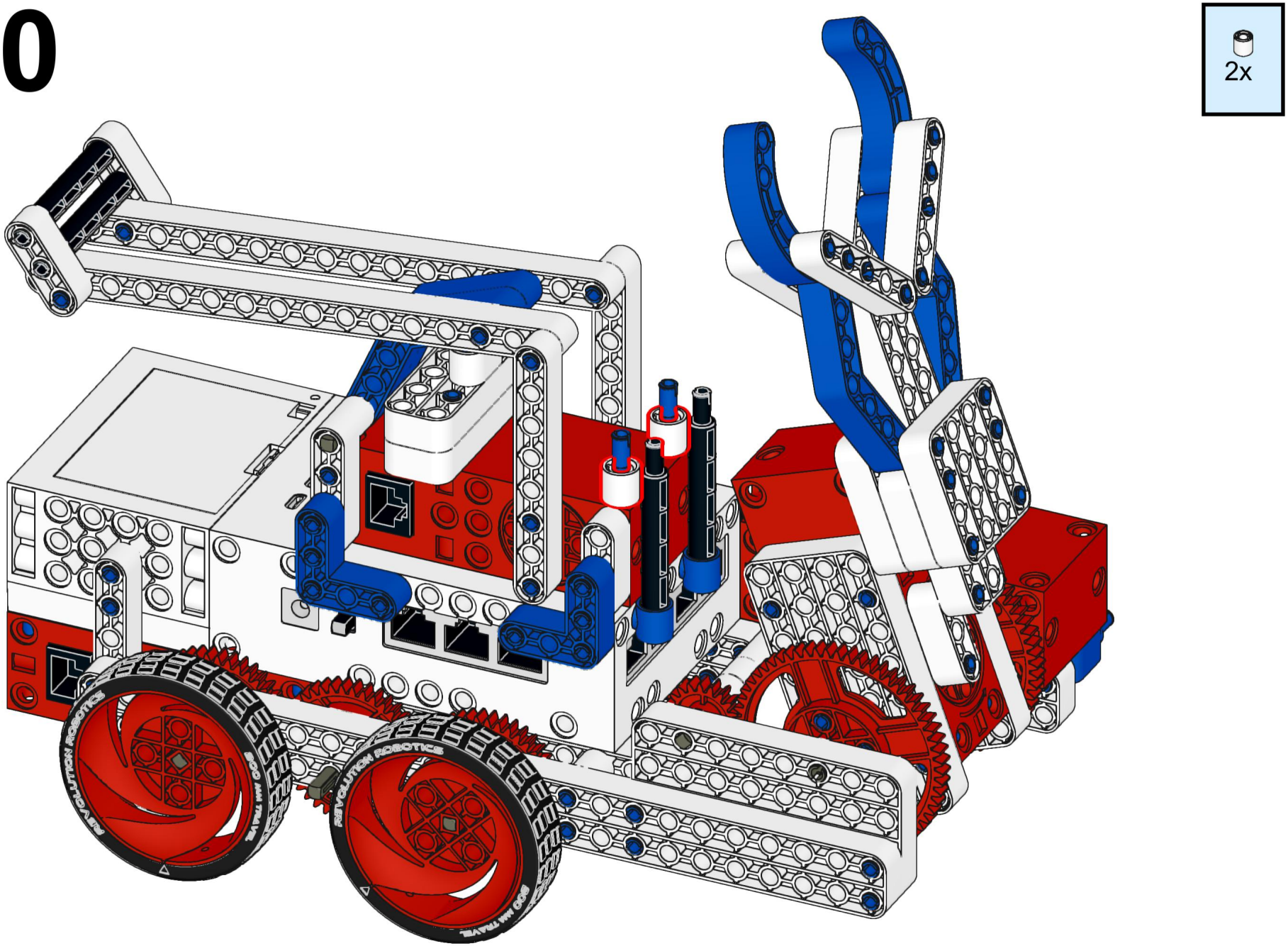

2x
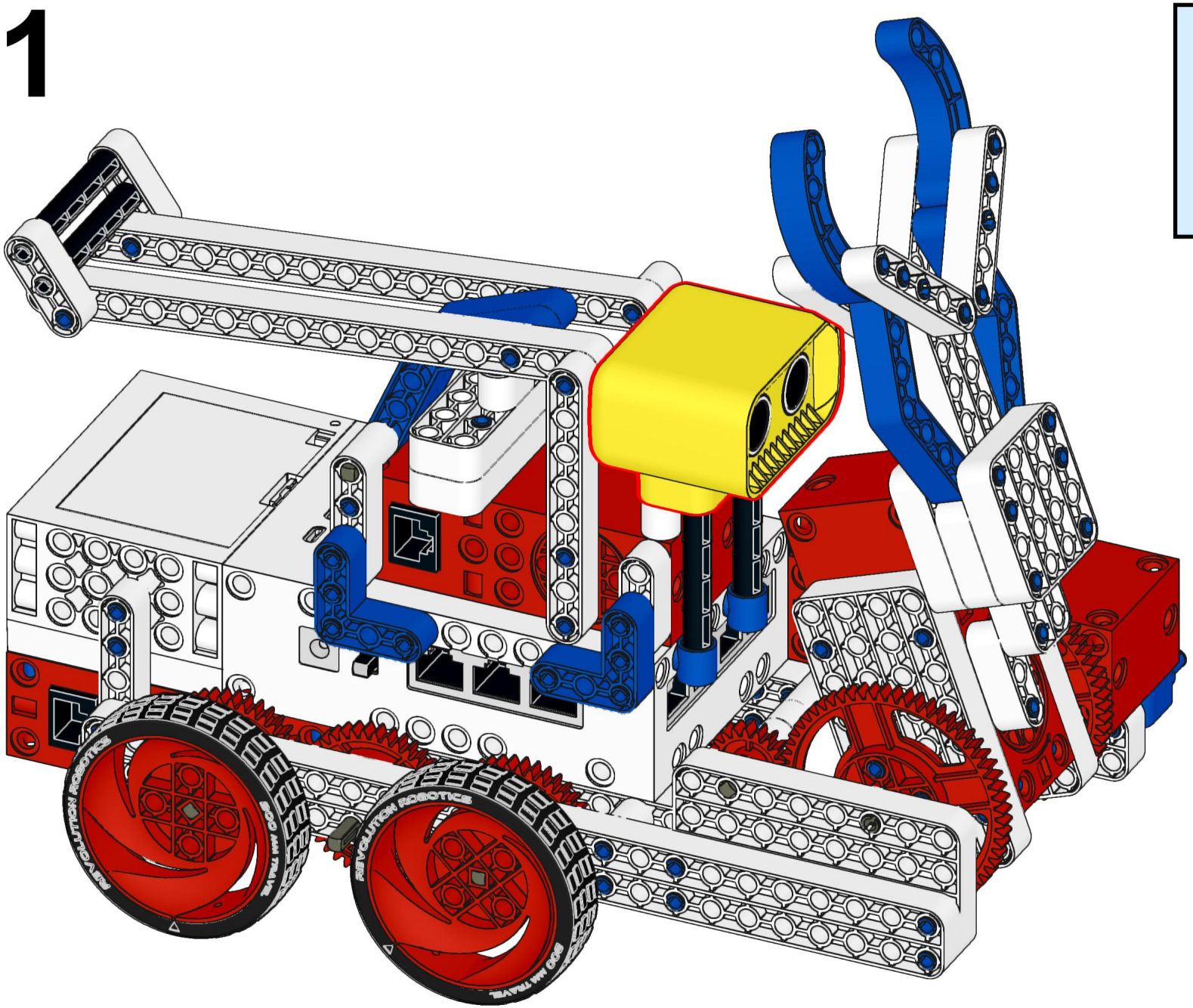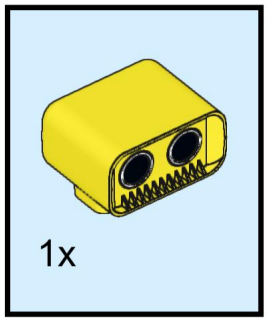
111