REVISIONS			
REV.	DESCRIPTION	DATE	APPROVED
1	INITIAL RELEASE OF DRAWING	2/21/14	RJT
2	PART RELEASED TO TOOLING	3/6/14	RJT
3	MODIFIED CRITICAL AND UNSPECIFIED TOLERANCES	4/7/14	RJT
4	MODIFIED FILLET RADIUS ON BENDABLE TABS	4/15/14	RJT

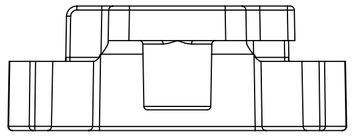

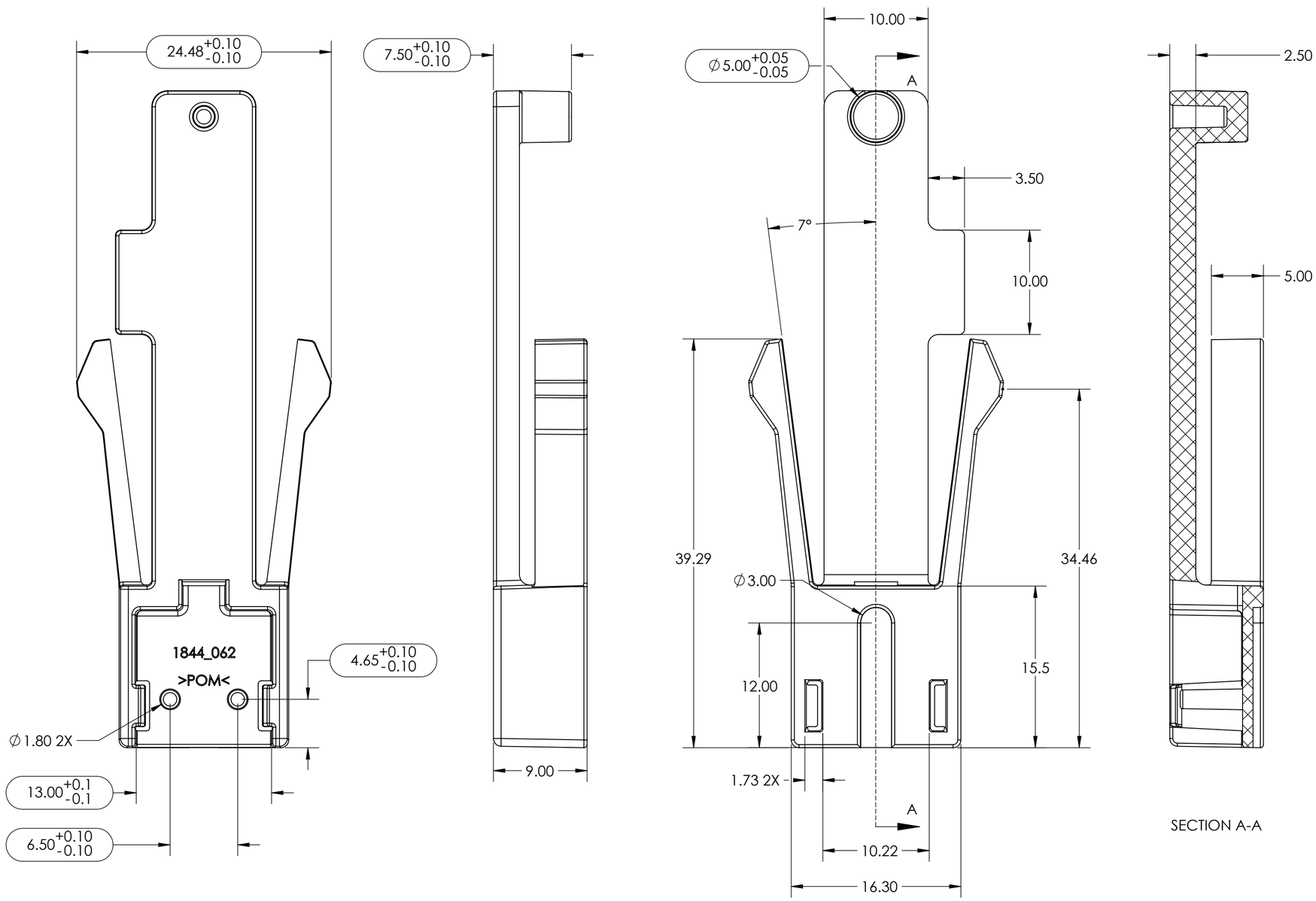

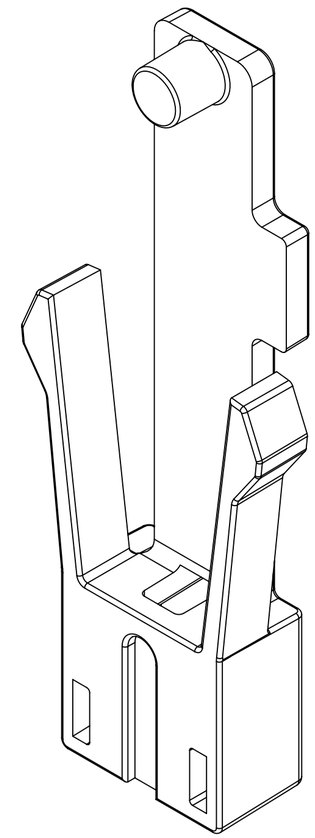

NOTE: CRITICAL DIMENSIONS ARE SHOWN CIRCLED.

NOTES (UNLESS OTHERWISE SPECIFIED):

1. PART TO BE INJECTION MOLDED
2. MATERIAL:POM
3. COLOR: PANTONE 381
4. FINISH: AS TOOLED
5. PART TO BE FREE OF ALL DENTS, DEFECTS, SCRATCHES, OIL AND DEBRIS.
6. USE SUPPLIED 3D DATA FILES FOR TOOLING; DRAWING PROVIDED FOR REFERENCE.
7. ALL GATES TO BE INTERNAL ON PART AS NOTED

Solidoodle

631 Hicks St., Brooklyn, NY 11231

CONFIDENTIAL
UNAUTHORIZED USE, DISTRIBUTION, OR REPRODUCTION OF THIS DESIGN, DRAWING, OR INFORMATION IS STRICTLY PROHIBITED. ALL RIGHTS RESERVED.

ENGINEERED		PREPARED FOR	
DRAWN		PROJECT	1844
CHECKED		JOB NUMBER	
APPROVED		PART NAME	Auto Leveler

DIMENSIONS ARE IN MM UNLESS OTHERWISE SPECIFIED. DO NOT SCALE.

UNSPECIFIED TOLERANCES	
Over 3 up to 6	±.1
Over 6 up to 30	±.2
Over 30 up to 120	±.3
Over 120 up to 400	±.5

THIRD ANGLE PROJECTION

SIZE	PART NUMBER	REVISION
C	1844_062_rev_04	1

SCALE 3:1 | SHEET 1 OF 1