Sinhgad Institutes

Stellar Eye

Team 73 Project Technical Report for the 2023 LASC

Prashant Patil[1], Tanmay Kanmahale[2], Atharva Pingale[3], Mukta Bahulekar[4], Sahil Phule[5], Swayam Sonar[6], Girija Wale[7], Atharva Shinde[8], Chitrarth Kadel[9], Shubhankar Patil[10], Sumit Harade[11], Aasit Vora[12]

Sinhgad Technical Education Society, Pune, Maharashtra, 411041, India

and

Dr. Dhananjay Khankal[13]

Sinhgad Technical Education Society, Pune, Maharashtra, 411041, India

Stellar Eye is a rocket developed by STES Rocketry for entry in the 1km height target category with a solid propulsion system at the 2023 Latin American Space Challenge. Stellar Eye is a 2.7m tall high-power rocket that features a student-built L-class solid motor and has a dual event reefing recovery system. Stellar Eye carries a team-designed and built acoustic levitator payload "Levi" to study the doppler effect in a high-G environment. The overall goal of this project is to come close to the intended height target and validate the payload's performance in flight.

---

[1]Prashant Patil, Project Manager, prashantamarsihpatil@gmail.com
[2]Tanmay Kanmahale, Mission Director, kanmahaletanmay@gmail.com
[3]Atharva Pingale, Aerostructure, atharva99pingale123@gmail.com
[4]Mukta Bahulekar, Avionics, bahulekarmukta@gmail.com
[5]Sahil Phule, Avionics, sahilphule2003@gmail.com
[6]Swayam Sonar, Payload, 2002swayam.sonar@gmail.com
[7]Girija Wale, Operations, girijawale432@gmail.com
[8]Atharva Shinde, Business Development, atharva.ms.412@gmail.com
[9]Chitrarth Kadel, Ground Station, chitrarth.kadel2003@gmail.com
[10]Shubhankar Patil, Recovery, shubhankarmpatil@gmail.com
[11]Sumit Harade, Analysis, sumitharade3@gmail.com
[12]Aasit Vora, Team Mentor, aasitvora1999@gmail.com
[13]Dr. Dhananjay Khankal, Faculty Advisor, dhananjay.khankal@sinhgad.edu

"As the countdown begins, the team stands tall, fueled by ambition, curiosity, and the desire to touch the skies."

Nomenclature

A	=	amplitude of oscillation
a	=	cylinder diameter
C_p	=	pressure coefficient
Cx	=	force coefficient in the x direction
Cy	=	force coefficient in the y direction
c	=	chord
dt	=	time step
Fx	=	X component of the resultant pressure force acting on the vehicle
Fy	=	Y component of the resultant pressure force acting on the vehicle
f, g	=	generic functions
h	=	height
i	=	time index during navigation
j	=	waypoint index
K	=	trailing-edge (TE) nondimensional angular deflection rate
Kn	=	ratio of the burn area of the propellant to the area of the nozzle throat
$Knmax$	=	maximum Kn value obtained
Kp	=	empirical constant
le	=	suspension lines length
m	=	rocket's mass without propellant
mp	=	propellant mass
n	=	number of grains
P	=	pressure
pc	=	average combustion chamber pressure
$pext$	=	external pressure
R	=	external radius of the grain
RUD	=	Rapid Unscheduled Disassembly
r	=	internal radius of the grain
re	=	nozzle exit radius
r^*	=	throat radius
S	=	parachute area
$SRAD$	=	Student Research and Developed
$STES$	=	Sinhgad Technical Education Society
t	=	fin thickness
tb	=	burn time
V	=	terminal speed
VX	=	opening relative velocity
Vf	=	maximum Mach number
W	=	weight
ρ	=	air density
ηcf	=	efficiency of the thrust coefficient

I.Introduction

STES Rocketry is an interdisciplinary student-run organization dedicated to developing engineering talent through design, construction, testing, and showcasing of complex rocket systems powered by high-powered rocket engines. The four main goals of this team are to (1) Compete in rocket engineering competitions across the globe, (2) Develop a link between academic studies and technical challenges through real-world applications, (3) Improve social interaction as part of an engineering team, and (4) To prepare students for public speaking and research articles.

The core principle of this team is to develop our members into talented engineers by providing them with the necessary skills and tools to grow and succeed. Every day we aim to accomplish feats only thought possible in the industry by incorporating professional design reviews, rigorous testing, and in-depth documentation of individual systems, hardware, and software.

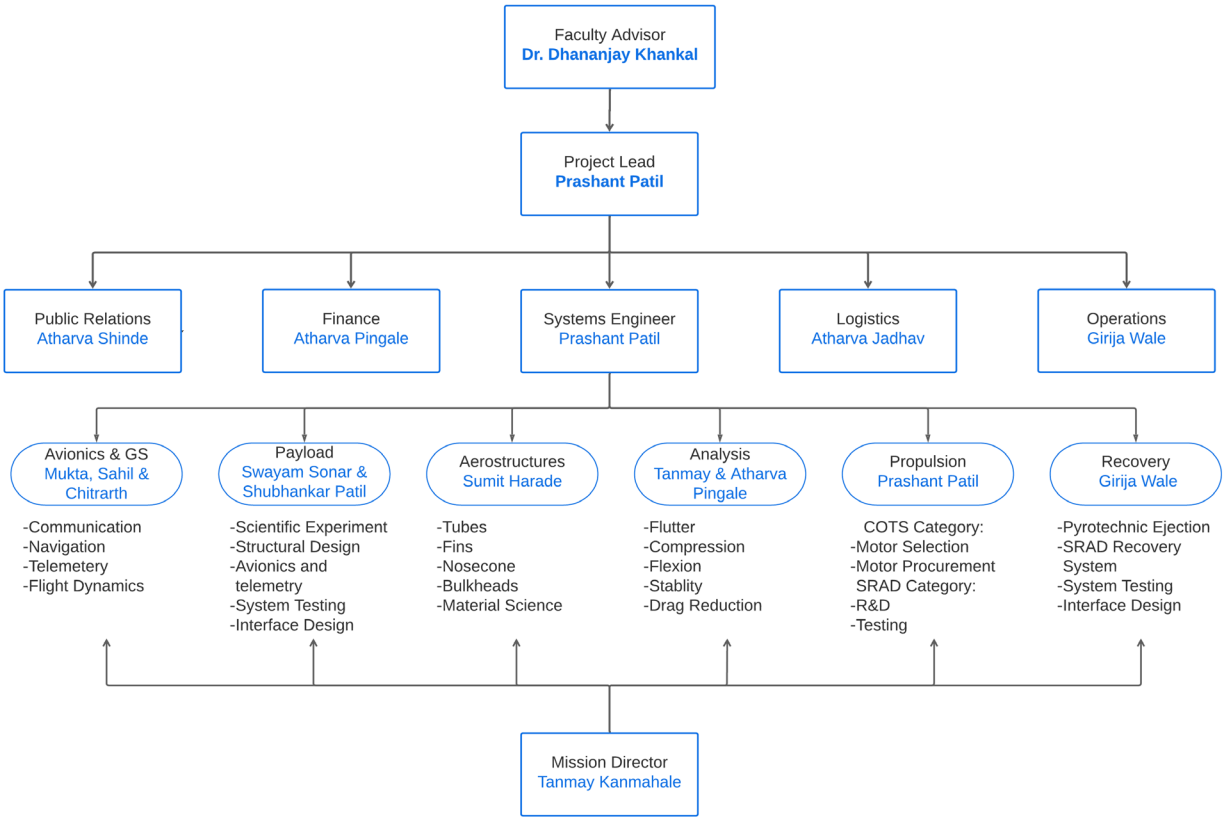

Figure I-1 Team Organigram

One of the most valuable components the team provides to students is the bridge between the classroom and workroom. Through SRT, students have an opportunity to continually apply and expand their engineering education through real-world design and fabrication challenges. SRT is composed of undergraduate student applicants from all Engineering campuses under Sinhgad Institutes. This means that on our team, freshmen have the unique opportunity to work on a project alongside seniors and graduate students, and have an opportunity to participate in practical, hands-on applications of aerospace projects. One of the key responsibilities that propels the team is making rocket science a more widely chosen field to work in and promoting STEM discipline among students.

The team is led by a Project Manager and is divided into two sections: management and technical. The management division includes Public Relations, Finances, Logistics, and Operations. The PR team oversees sponsorship and communication, while the Finances department oversees accounts and budgets. The logistics team handles team travels such as test launches, Preliminary and Critical Design Reviews, and on-site arrangements at the launch venue. Finally, the Operations team oversees all technical aspects of launches, such as purchasing competition motors, arranging launch sites, and, most importantly, compiling checklists and procedures to ensure a successful

rocket launch. On launch days, the Mission Director oversees Development and operationalize strategies to ensure efficient and timely execution of the project activities. System Engineering leads the technical division, which is made up of six sub-teams: Avionics, Payload, Propulsion, Recovery, Analysis, and Aerostructures. Each one takes care of its namesake part in the rocket.

II.System Architecture Overview

Stellar Eye contains five key subsystems: Aerostructures, Avionics, Payload, Propulsion, and Recovery. A more detailed description of each subsystem can be found in **Error! Reference source not found.** and in the following section. **Error! Reference source not found.** describes the interfaces between these subsystems. **Error! Reference source not found.** depicts a mockup CAD figure of the rocket, showcasing a high-level overview of its systems. The following sections will outline each subsystem and its purpose, system overview, design specifications and justifications, followed by verification and validation methodology.

Error! Reference source not found. **Stellar-Eye CAD Mockup**

Table 1. Overview of Stellar Eye's Subsystems

System	Description
Propulsion (PR)	The propulsion system comprises the motor propellant and the motor hardware. PR is responsible for delivering the required thrust to the vehicle to achieve an apogee of 1km.
Aerostructures (AS)	The aerostructures system includes components such as the nose cone, body tube, fins, bulkheads, coupler tube and the motor mount. AS binds the components of the launch vehicle so that the vehicle reaches the desired altitude and returns to the ground safely.
Recovery (RC)	The recovery system includes components such as the parachute, shock cord, eye bolts and ejection charges. RC enables the team to retrieve and re-use the vehicle after a nominal flight.
Avionics (AV)	The avionics system includes the altimeters, the GPS, and any other custom electronics within the avionics bay. AV allows the team to gain an understanding of the vehicle's trajectory and to control the return of the vehicle to Earth.
Payload (PL)	The payload subsystem includes the payload. PL is effectively a third-party system that must not impact the safety of the vehicle's flight and shall record scientific data.

Table 2. Overview of Stellar Eye's Subsystem Interfaces

ID	Direction	Description
INT1	PR-AS	Transfer of force from the motor to the airframe. Mounting of the motor and delivery of thrust.
INT2	AS-PL	Mounting of the payload within the airframe. Also transfer of inertia, vibration, radio frequency (RF) transparency, and heat from the airframe to the payload.
INT3	AS-AV	Mounting of the avionics bay in the airframe, transfer of heat, inertia, vibration, and shock. Potential electromagnetic interference effects. Vent/switch holes.
INT4	AS-RC	Forces from ejection charge transferred to airframe. Forces from parachute unfurling transferred from shock cords to fasteners and then bulkheads in the airframe
INT5	PL-AV	N/A
INT6	AV-RC	Electrical signals sent from the avionics to the deployment charge.

1. Propulsion Subsystem

a. Design Overview

Stellar Eye's propulsion system for LASC 2023 is selected to be an SRAD L-Class Solid Rocket Motor, named "Lakshya". Lakshya is the first SRM to be implemented in a high-power rocket by the team. The SRM has been analyzed to obtain the optimal strength-to-weight ratio as a part of the rocket, and the appropriate performance for lifting off the rocket to 1km AGL. Its Aluminum 6063 T6 casing has an external diameter of 76mm, 4mm thickness, and a length of almost 810mm. The alloy was chosen as it was the only commercially available graded aluminum alloy found in the required dimensions. A layer of EPDM Sheet was chosen to thermally insulate the combustion chamber and prevent the aluminum from losing any structural reliability due to thermal issues. Its thermal strength has been tested to a flame jet of a maximum temperature of 600C, showing minor deformation near the ends of the sheet. Lakshya also features a Stainless-Steel nozzle expanding the hot gases that are created by the combustion of KNSB propellant segments. Lakshya uses 6 BATES grains of KNSB 65-35 as propellant, due to the simplicity and ease of procurement of raw materials. Extensive studies done on the top of the composition's thermodynamic properties and burn rate, such as those available in Richard Nakka's *Experimental Rocketry* Website, also contributed to the propellant's choice.

The grain inhibition is made with 3D printed ABS casting tubes and external face of grains with room temperature vulcanizing glue. ABS was chosen to aid ease of casting process and was easy to procure and make. Adding to this, the tubes ablate away once the motor finishes burning reducing the amount of residue left inside the motor.

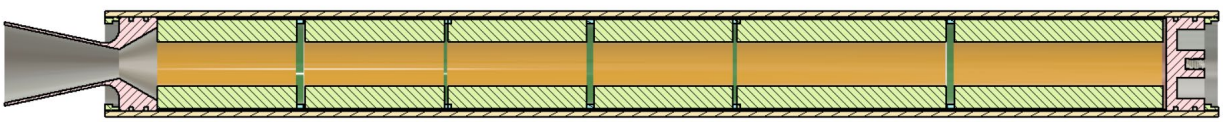

Figure II-1 Lakshya Cutout Drawing

Table 3. L class motor "Lakshya" design data

General

Specification	Data	Unit
Oxidizer	KNO3	-
Fuel	Sorbitol	-
Empty Mass	4.676	kg
`Loaded Mass	7.632	kg
Burn Time	4.74	s
Total Impulse	4,356.18	N.s
Specific Impulse	147.36	s
Thrust Coefficient	1.05	-
Max. Thrust	2280	N
Mean Thrust	1112	N
Mean Chamber Pressure	516	psi
Max. Chamber Pressure	538	psi

Structural

Component	Specification	Data	Unit
Nozzle	Material	Stainless Steel 304	-
	Throat Diameter	21	mm
	Exit Diameter	46.5	mm
	Convergence Angle	30	-
	Divergence Angle	12	-
Combustion Chamber	Material	Al 6063-T6	-
	External Diameter	76	mm
	Thickness	4	mm
	Length	810	mm
Forward Closure	Material	Stainless Steel 304	-
Retainer	Material	Stainless Steel 304	-
	Pitch Size	1.25	mm
	Thread Length	15	mm

b. Purpose, Goals and Conceptual Design

Lakshya ensures the required thrust and impulse is delivered to the vehicle and that it achieves the target apogee of 1km with high accuracy at the LASC. The main components include the motor propellant and the motor hardware, where the propellants are combusted during flight to convert chemical potential energy to kinetic energy via the expulsion of high-pressure gases, imparting a propulsive force. Lakshya is closely connected with the ground support equipment and the Aerostructures Subsystem. Ground support equipment provides definite control over the ignition of the motor and the orientation of the vehicle both before and during launch.

Lakshya's Mission:

- Be the 1st ever Indian SRM for a High Power Rocket
- Be implemented in Stellar Eye Rocket for LASC 2023
- Propel Stellar Eye at 1km
- Design SRAD Electronics for Thrust, Temperature and Pressure measurements.

- Create an SRM based on the experience of designing and testing sub-scale SRMs.
- Use of KNSB Propellants.
- Meet the competition's Rules and Requirements in combination with the Design and Evaluation Guide.
- Approach a COTS SRM external dimensions.
- Follow international bibliography for SRMs.
- Propellant Combustion Performance and Mechanical Analysis.
- Extensive Testing and Validation Methods.
- Feedback from experts in the field.

Grain Design Parameters:

- KNSB Propellent.
- Apogee of 1km = 3000 Ns / L-class SRM.
- L/D for casing 10 to match COTS SRM dimensions.
- MEOP of 600 psi.
- Neutral thrust curve.
- Grain Spacing of 5mm.

c. Grain design and performance characteristics

Taking into consideration the above parameters, the dimensions of Lakshya's Grains have emerged with the corresponding performance of the SRM through Open Motor and Richard's Nakka Performance Code:

Table 4 Grain Design - Lakshya's Performance

Grain Dimensions

External Diameter	64	mm
Core Diameter	32	mm
Core Shape	Bates	-
Segment Length	150 & 100	mm
Number of Segments	6	-

Motor Performance

Total Grain Mass	2.955	Kg
Total Impulse	3290	Ns
Fmax	1638	N
Favg	1545	N
Isp	113.52	Sec
Burn Time	2.10	Sec

Below are representations of theoretical Thrust and Pressure outputs of Lakshya, versus it's Burn Time:

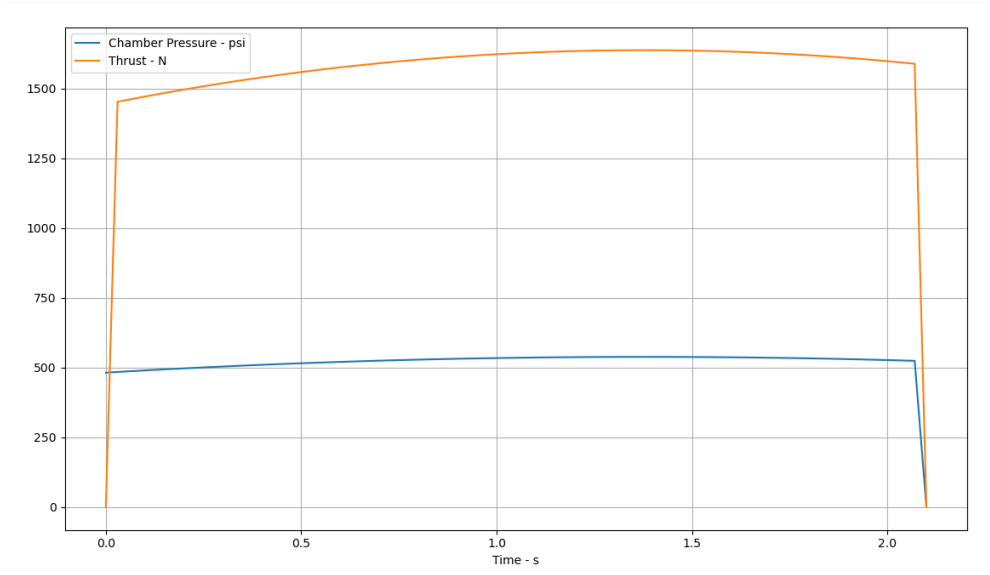

Figure II-2 Thrust – Time / Pressure – Time Curve

d. Motor Components

Lakshya's components are shown in the following figure. Their use and design philosophy are described below:

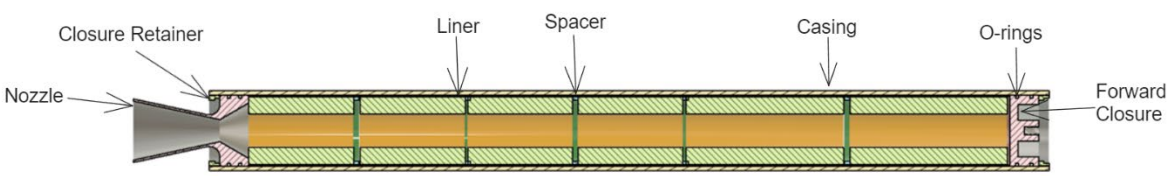

Figure II-3 Motor Assembly

- **Forward Closure**: This is the front retainer of the motor. Its key role is to align Lakshya within the axis of the rocket to achieve an unaffected thrust transfer. Also, it tightens the internal components of the motor to avoid any unexpected movement. It is connected to the casing through the closure retainer. It is made from 304 Stainless Steel. The Bulkhead Retainer has been analyzed and optimized for 3 cases, resulting in a final mass of 500g.

SF_{MEOP}	**6.461**
SF_{Proof}	**2.408 (1610 psi)**
SF_{Burst}	**1.615 (2400 psi)**

- **Casing**: It is the combustion chamber of the motor. Its key role is to host and withstand the process of combustion, so it is one of the most critical components. It is the main structure of the motor, on which every component is assembled upon. It is made from Aluminum 6063 T6. The casing has been analyzed for 3 cases:

SF_{MEOP}	**4.271**
SF_{Proof}	**1.592 (1610 psi)**
SF_{Burst}	**1.06 (2400 psi)**

- **Nozzle:** It is one of the most critical components of the motor. Its key role is to accelerate the hot gases subsonically and then supersonically to lead to their expansion, creating the rocket's thrust. It is made from 304 Stainless Steel. The nozzle is one of the most analyzed components of Lakshya. Its internal design

emerged from the Grain Design Parameters mentioned above in combination with 2D and 3D CFD analysis. Through these analyses the main dimensions occurred as seen below:

Table 5. Nozzle Dimensions

beta	30.0	degrees	Nozzle convergence half-angle
alpha	12.0	degrees	Nozzle divergence half-angle
Dc	76	mm	Chamber inside diameter
Dt	18.14	mm	Nozzle throat diameter
De	48.36	mm	Nozzle exit diameter
De opt	57.37	mm	Optimum nozzle exit diameter
Lc	**50.11**	mm	**Convergence length**
Ld	**71.10**	mm	**Divergence length**
Lo	**121.21**	mm	**Overall length**

The nozzle has been analyzed and optimized for one case:

SF_{MEOP}	**14.7**

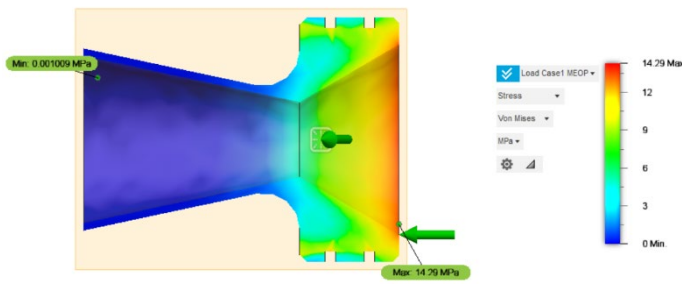

Figure II-4 Nozzle Structural and CFD Simulation

- **Closure Retainer**: It is the retainer for both the nozzle and forward closure of the motor. Its key role is to stabilize and align both nozzle and forward closure within the motor axis to achieve horizontal thrust production. Also, it tightens the internal components of the motor to avoid any unexpected movement like RUD. It is connected to the casing through thread of 1.5mm pitch. It is made from Aluminum 6061 T6. The retainer has been analyzed for 3 cases:

SF_{MEOP}	**4.271**
SF_{Proof}	**1.241 (1610 psi)**
SF_{Burst}	**0.833 (2400 psi)**

- **Liner**: It is the first layer of thermal insulation inside the casing. Its key role is to absorb the critical thermal stresses to protect the casing and make it reusable. Also, it fills any gaps between the inhibited grains and the casing to avoid any pressure losses. It is made from silicon rubber called EPDM. Its thermal strength has been tested to a flame jet of a max temperature of 600°C. Its decomposition initiated after 30s, which is more than enough while considering Lakshya's burn time.
- **Casting Tubes:** It is the second layer of thermal insulation inside the casing which is bonded with the grains. It is the mold that is used during the grains casting process. Its key role is to limit the combustion surfaces of the grains and offer structural rigidity to the solid propellant segments. The tubes are 3D printed out of ABS which get ablated after each fire.
- **Grains**: It is the solid propellant segment. There are six grains inside the casing. Their key role is to produce hot gases inside the casing during the combustion process. They are produced from Sorbitol as fuel and KNO3 as an oxidizer in a 35:65 ratio. A total of 3kg of propellant is used in design.

- **O-Rings**: Used in Forward Closure and Nozzle, its key role is to gas-proof the front and rear edge of the motor and retain the internal pressure, leaving only the nozzle's throat where the gasses could exit. It is made from silicon. The O-rings make sure hot gases do not exit from anywhere other than the throat.
- **Spacer**: Used to provide gaps between propellant grains within the motor, these are necessary to ensure that all segment end surfaces begin burning immediately upon motor start-up. These spacers are made of ABS which gets ablated during the burning process. Since the grain design parameters included a neutral thrust curve, the team decided to space the grains evenly with a 5mm gap between the segments.

e. Design Analysis

The team's objective with Lakshya's tests is the validation of the motor's functionality and structural strength, as well as achieving optimal operating performance. To accomplish these goals, the motor goes through tests to estimate the thrust values. More explicitly, by measuring the thrust in relation to time, the team can assess the motor's functionality, by comparing the measured data to the ideal theoretical values, obtained from analyses.

Due to time and logistical constraints, the team was granted one test overall before the competition to test their new motor. The Propulsion team planned this test for July 2023, in order to resolve any design or performance complications that might arise. The thought behind the first and only test was to validate the motor's performance and mechanical strength. That being the case, a decision was made for the motor to operate at MEOP. Lighting all grains at once was crucial, hence the team came up with cross ignitors which light top, bottom and side grains all at once. 3 of these ignitors were used with over 15g of SRAD pyrogen and ignition in grain 5, 3 and 1 from forward to nozzle, an intended grain mass of ~3000g, and five 5mm spacers between grain. The test was conducted on 17th July with the following results.

- The ignitor provided a successful ignition.
- Grain mass burned completely.
- Nozzle, Forward closure and their retainers sustained pressure greater than MEOP.
- Aluminum casing withstood the thermostructural stresses of ~360 ℃
- Test stand sensors recorded the thrust data generated by the motor.

A small design flaw was revealed in the first test which was a mistake during the assembly of the motor. While designing the motor on OpenMotor [1], the top face of first grain and bottom face of last grain was inhibited, but during the static fire it was not done. Secondly, a minor crack was observed in one of the grains while insulating with the liner. Due to these two factors, there was an abrupt rise in thrust, exceeding the planned motor performance. This test gave us confidence that motor can handle pressure greater than MEOP. Below are the conclusions from analyzing the thrust to time curve:

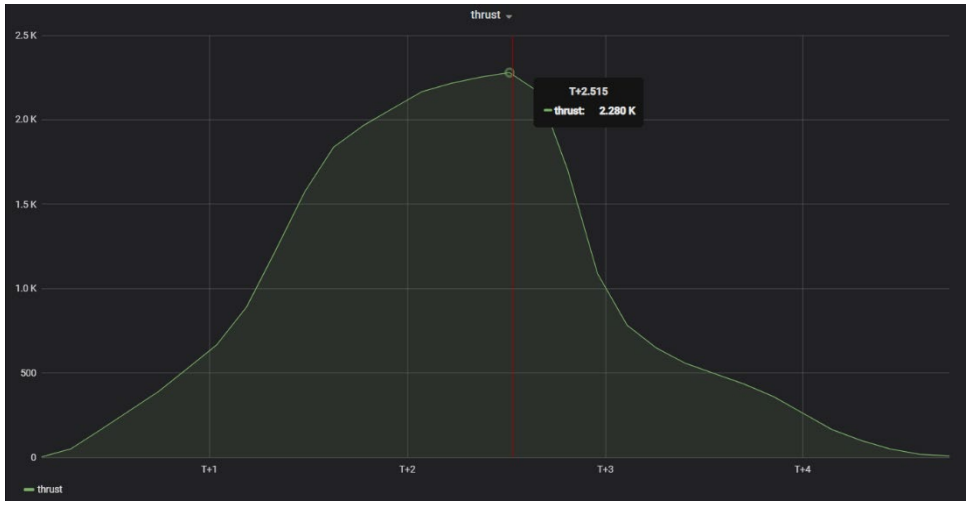

Figure II-5 Thrust vs Time Curve of 1st static fire.

To begin with the start of the static test and until the end, the motor operates normally. The spike is not as fast as the theoretical graph, because of minor inconsistencies in the grain production and the ignitor not igniting the required simultaneous grain ignition. While the average thrust of the motor was lower than predicted, the max thrust at T+2.515 mark was 617N higher than what the team simulated on OpenMotor, this is where the first and only

anomaly was detected during the test. This spike in max thrust gives evidence that there was a rise in pressure inside the combustion chamber which was greater than MEOP. As there were no pressure sensors onboard the combustion chamber, we couldn't figure out by what margin the test overshot in terms of pressure.
During the post-test analysis, the casing's threads were fully intact on both sides with no visible deflection. Removal of the closure retainers, forward closure and nozzle was effortless with no damage to either of them. There were some cosmetic changes at the nozzle throat as it turned pitch black during the test and some soot at the converging section.

To conclude, it is important to note that the motor's first test showed a very positive sign that the motor can operate normally, and with some improvements can reach optimal performance. In addition, there was no mechanical strength issue. Finally, the decision to test the motor at MEOP was proved correct, since the team was aware of unpredicted problems of motor assembly, the sudden rise of operating pressure, which occurred as a consequence of documentation error.

2. Aerostructures Subsystem

a. Design Overview

The main objective of aerostructures is to enhance flight performance and guarantee the rocket's stability and safety during flight. All to provide a strong structure for the fuselage to support all subsystems and good module integration to ensure safe handling and operation of the vehicle. To meet such goals, the team relied on advanced manufacturing techniques, numerical analysis and lots of research for low drag-optimized performance. An overview of the dimensions and inner connection of the modules are presented in Figure II-6 with a data summary in Table 6

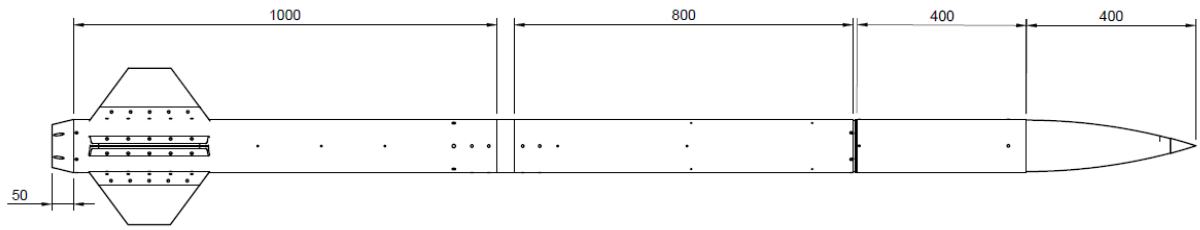

Figure II-6 Fuselage

Table 6. Stellar Eye Data Summary

Lengths	mm
Diameter	124
Total Length	2690
Nosecone	400
Recovery Bay	400
Upper Airframe	800
Booster Tube	1000
Tailcone	50

Masses	Kg
Vehicle	15.05
Propellant	2.956
Payload	4.25
Loaded	22.68

Part	Position from Nose (mm)
First Rail Button	2632.5
Second Rail Button	1822
Center of Pressure	2000
Center of Gravity	1720

Fins

Number	4	Height	120
Root Chord	280	Tip Chord	100

The Stellar Eye is nominally 124mm in diameter and stands approximately 2.7m tall. The entirety of the airframe is made of fiberglass using SRAD techniques. Coupler, bulkhead, fins and fin brackets connecting the airframe are machined out of Aluminum. Both parachutes are housed inside the recovery bay, next to the nosecone. Fiberglass was chosen as the primary structural material as it is lightweight and very strong making it popular in high-power rocketry. It is also transparent to radio frequencies, which is important for receiving telemetry for flight computers.

b. Purpose and Goals

The purpose of the Aerostructures subsystem is to provide a structurally sound airframe that will safely house the other subsystems and be capable of withstanding the loads and stress that the launch vehicle will experience during the flight to a minimum Factor of Safety of 1.5. Collaborating with the Simulations Team, the Aerostructures team lead the manufacturing of the launch vehicle. Stellar Eye is built with optimal aerodynamics, where possible, and is manufactured to the ideal mass configuration to ensure it reaches the target apogee and maintains stability throughout the flight. Furthermore, it is one of the long-term goals of the team to manufacture as many components in-house as possible and utilize Student Research and Developed (SRAD) methods. Making components in-house rather than purchasing them off the shelf provides team members with knowledge and experience, ensures quality and flexibility in production, whilst remaining cost-effective. However, due to technological limitations of the team the manufactured components are not up to industry standards and may not be consistent in production. The entirety of Stellar eye's airframe and internal components has been designed and manufactured in-house by the team members.

c. Design Specifications and Justification

a. Couplers

This year, the team is using two types of couplers to connect the different parts of the rocket. A bulkhead coupler (which also acts as a recovery bulkhead) inspired by our 2019 model, the APJ-2, will be used to join the nosecone-parachute bay with the upper airframe and a tube coupler to join the upper airframe with the booster tube. The end goal being making the design more modular.

The modularity is achieved by using coupling bulkheads and pipes. As observed from LASC 2022, a lot of time was invested in the electronics and motor assemblies. So special considerations were taken into account while designing this year's rocket, including modularizing compartments so the team can work on them separately. The recovery tube gets coupled with a bulkhead coupling disc, fastened with six M6 screws on each side as shown in (See Figure 9). Coupling Upper Airframe and Booster Section is the same trusted design as last year, using a aluminum coupler with 1 caliber of face covering each section of airframe as shown in **Error! Reference source not found.**.

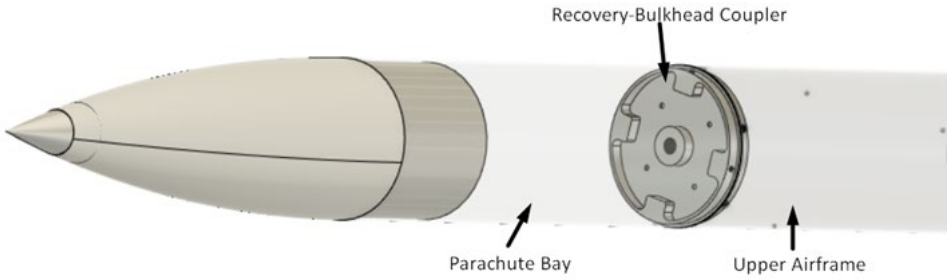

Figure II-7 Bulkhead Coupler

Figure II-8 Tube Couplers

b. Bulkheads

The Stellar-Eye Rocket features several bulkheads, including the Recovery-Coupler bulkhead, aft bulkhead, and thrust bulkhead, all of which are machined from aluminum 6061 material. These bulkheads play critical roles in the rocket's operation, separating different sections and withstanding high pressures and forces generated during

launches. The aluminum 6061 material is chosen for its lightweight and high-strength properties, making it suitable for use in rocketry applications.

- *Recovery-Coupling Bulkhead*

The Recovery-Coupling Bulkhead is a critical component that plays a dual role, acting as a recovery bulkhead and a coupler. The Recovery-Coupling Bulkhead is designed to withstand high pressures and forces generated during rocket launches. It is made of aluminum 6061 material, which is known for its lightweight and high-strength properties. The bulkhead is machined on a VMC, which allows for precise and accurate machining of complex shapes. By using a bulkhead style coupling in the design, we can stack smaller fuselage sections together with ease, making compartmentalization a lot simpler and allowing teams to work on individual components separately.

- *Thrust Bulkhead*

The thrust bulkhead is a vital structural component of the rocket responsible for transferring the thrust generated by Lakshya to the rest of the rocket. Its design significantly impacts the success of the rocket propulsion system. This component includes a grove, precisely fitted to the rocket motor's forward closure, ensuring efficient transfer of thrust. The thrust bulkhead plays a critical role in rocket propulsion, safeguarding the rocket structure from any potential damage caused by the thrust. It is designed to withstand the high pressure and temperature generated by the rocket motor.

- *Aft Retainer Bulkhead*

The aft bulkhead is a structural component located above the boat tail of the rocket. It serves several important functions in the propulsion system. Firstly, the aft bulkhead is used to transfer load from the bottom of the rocket up to the thrust bulkhead and then rest of the fuselage through thrust bulkhead. This ensures that the rocket structure is able to withstand the forces generated by the rocket motor during launch. Secondly, the aft bulkhead is designed to support the motor during the recovery using an aeropack retainer. The aeropack retainer is a component that retains the motor during recovery. The aft bulkhead ensures that the motor is securely held in place and that it does not fall during flight.

c. Nosecone

Stellar Eye consists of an ogive-shaped nosecone with a 3.22:1 fineness ratio and is manufactured using a 3D printed female mold and 240 GSM fiberglass. The ogive shape is a popular choice for nosecones due to its aerodynamic properties, which result in low drag and stable flight characteristics. The manufacturing process involved creating a female mold using the 3D printer and applying layers of 240 GSM fiberglass. The layers of fiberglass were allowed to cure before being removed from the mold. The finished nosecone was connected to the body tube using a shoulder, which helps ensure a tight fit between the nosecone and parachute bay. The use of fiberglass and the 3D printing process allowed for a high degree of precision and repeatability in the manufacturing process, resulting in a nosecone that meets the desired specifications. Overall, the use of an ogive shape and the 3.22:1 fineness ratio, combined with the manufacturing process using a 3D printed mold and fiberglass, result in a high-performance nosecone suitable for use in this year's project.

The top of the nosecone of the rocket features an Aluminum 6061 nosetip, which serves multiple important functions. Primarily, it provides heat resistance and maintains an aerodynamically efficient profile. The choice of using the 6061-aluminum alloy is common due to its advantageous properties, including high strength, good machinability, and excellent resistance to heat and corrosion.

For secure attachment, the nosetip is held in place by a specially designed nosetip retainer that securely fits onto the nosecone. This retainer utilizes friction fit and incorporates a locking mechanism to ensure that the nosetip remains intact during the entirety of the flight. Connecting the parachute involves passing an M8 threaded rod through the nosetip retainer and attaching an eye nut at the rod's end. The eye nut serves as a reliable point for securely fastening the parachute's quick links. Both the nosetip and the retainer are manufactured using CNC technology to maintain precision and quality.

Figure II-9 Nosecone and Nosetip

d. Body Tubes

Both tubes, upper airframe and booster tube are manufactured using E Glass fiber on a cylindrical mild steel mandrel using a wet layup process. E Glass Fiber of 400 GSM was chosen because of its Strength and is comparatively less expensive than carbon fiber. For testing, a compression load using a universal testing machine (UTM) was applied to a tube and the results were quite impressive. Conclusion: The 2 mm thick fiberglass tube can withstand up to a maximum force of 40 KN before fracturing.

Figure II-10 Fuselage made with Wet-Lay Up Process

e. Fins

Stellar Eye's trapezoidal fins are an essential part of this year's rocket design which is used to provide stability and control during flight. These fins are made from 3mm thick aluminum sheets of 6061 grade and are manufactured using laser cutting technology. These fins are designed to fit snugly onto the rocket's body and are secured in place using M6 Countersunk bolts and screws. These trapezoidal fins are carefully engineered to withstand the high stresses and temperatures experienced during launch and flight. Therefore, they are made from high-grade aluminum, which offers excellent strength and durability while remaining lightweight.

i. Fin Attachment

For the fin attachment, aluminum brackets are used. To attach the fins to both the aluminum brackets and the fuselage, M6 countersunk screws are utilized. Careful consideration for the thickness of the brackets was made to ensure that the screws can be easily threaded into them. After much consideration, the team has settled on a thickness

of 4 mm. This thickness strikes a balance between ensuring that the brackets are robust enough to securely hold the fins and allow for easy threading of the screws. For the manufacturing of aluminum brackets, a vertical machining center (VMC) is used.

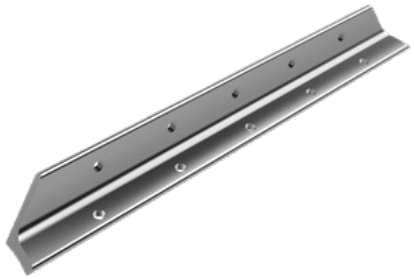

Figure II-11 Aluminum Fin Bracket CAD

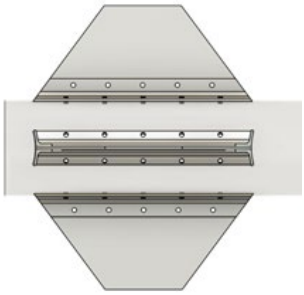

Figure II-12 Fin Assembly

ii. Fin Flutter

The team utilized Aero FINSIM software to analyze the behavior of the fins during the flight of our rocket. The dimensions of the fins (refer Table 7. Fin's Dimensions) were taken into consideration, and the software was able to calculate the flutter and divergence velocities. It was determined that the flutter velocity was 1.44 MACH, and the divergence velocity was 0.92 MACH. These values are critical to ensuring the safe operation of the rocket. During the flight of our rocket, the Mach number experienced did not exceed 0.49. As a result, the safety factor for flutter was calculated to be 2.93, and the safety factor for divergence was calculated to be 1.87. These safety factors provide an additional level of assurance that the fins will not experience any issues during the flight, which is of utmost importance for the success and safety of the mission.

Table 7. Fin's Dimensions

Number of Fins	Root Chord	Tip Chord	Height	Sweep Length	Sweep Angle	Thickness	Fin Cross Section	Units
4	200	100	120	100	39.8°	3	Square	Metric (mm)

A fin can twist due to aerodynamic forces, but its elasticity resists it. At a certain speed, called the divergence speed, the elasticity can't resist enough, and the fin twists uncontrollably. Hence this year's Fin design is optimum and does not exceed the divergence and flutter speed. The additional results from the software are shown in the table below.

Table 8. Aero-FinSim Software Additional Results

Divergence MACH	Flutter MACH	Lift Slope CN-α	G (psi)	Poisson Ratio	Density (lb/in^3)	F_bending (Hz)	F_torsion(Hz)
0.92	1.44	11.86	3759398.3	0.33	0.098	169.73	202.23

f. Tailcone

The aft part of a rocket, also known as the boat tail or tail cone, is a conical structure located at the base of the rocket. It is designed to reduce base and pressure drag, which is the force generated at the rear of the rocket as it moves through the air. The boat tail is typically made from lightweight materials to reduce the overall weight of the rocket.

In this case, the boat tail is 3D printed from PLA+ material. PLA+ is a type of thermoplastic that is commonly used in 3D printing due to its strength, durability, and resistance to heat. Using 3D printing technology allows for precise and complex shapes to be produced with minimal waste material, making it an efficient and cost-effective manufacturing process.

d. Design Analysis

i. Component Analysis (FEA)

For component analysis, Autodesk Fusion 360 simulations were utilized to perform static structural analysis on the coupler and bulkheads. The aim was to evaluate their strength, deformation, and stress distribution under static loading conditions. The simulations were carried out using the Finite Element Analysis (FEA) approach, with a focus on identifying any weak points in the components and proposing suitable modifications to enhance their performance. The results obtained from the simulation revealed that the coupler and bulkheads were capable of withstanding the expected loads, with stress levels remaining within safe limits.

a. Environment Setup

Table 9. FEA Environment Setup Information Rubric

Environment Setup	Description
Hardware	A high-performance computer is used with a powerful processor, large RAM, and high-end graphics card.
Software	Autodesk Fusion 360 Simulation
Material Properties (For Aluminum 6061 as per software)	Density: 2.7E-06 kg/mm^3, Young's Modulus: 68.9 GPa, Poisson's Ratio: 0.33, Yield Strength: 275 MPa, Ultimate Tensile Strength: 310 MPa, Thermal Conductivity: 0.167 W/(mm C), Thermal Expansion Coefficient: 2.36E-05 /C, Specific Heat: 897 J (kg C).
Boundary Conditions	u = v = w = 0 is set for the component which has the bolted connections, where u, v, and w represent the displacements of the component in the x, y, and z directions, respectively. The zero-displacement condition in all directions ensures that the component is fixed and does not move or rotate at the joint area.
Mesh Generation	Average Element Size: 10%, Element Order: Parabolic, Max Turn angle on curved mesh: 60, Minimum Element Size: 20%
Structural Loads	Structural Load is applied to selected geometry.
Post-Processing	Once the analysis is complete, post-processing is performed for changes made as per results.

b. Coupler

- *Bulkhead Coupler*

Von Mises

[MPa] 0.01 7.624

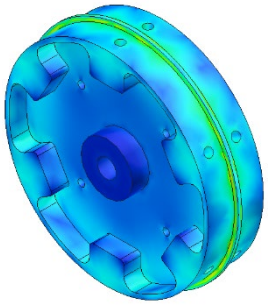

Total Displacement

[mm] 0 0.002001

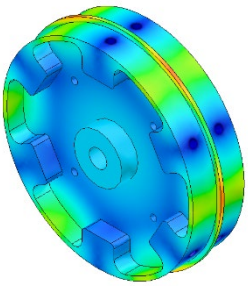

The FEA results indicate that the bulkhead coupler has a maximum stress of 7.624 MPa and a maximum displacement of 0.002001 mm when subjected to a force of 3000 N. The stress is well below the yield stress of the material, indicating that the component is safe to use under this loading condition. The maximum stress of 7.624 MPa is well within the allowable stress limit for the material used in the bulkhead coupler. Therefore, the component will not experience any permanent deformation or failure due to this loading condition. Similarly, the maximum

displacement of 0.002001 mm is well within the acceptable limit and will not cause any significant change in the operation.

- *Tube Coupler*

Von Mises

[MPa] 0.08 9.95

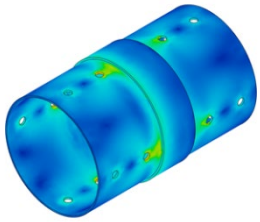

Total Displacement

[mm] 0 0.002899

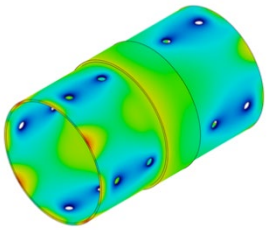

Based on the results of the static structural analysis, it is concluded that the coupler is capable of withstanding twice the force of the rocket motor (around 3 KN) without compromising the structural integrity. The safety factor of 13.81 indicates a significant margin of safety, providing additional confidence in the design. The maximum stress of 9.95 MPa and total displacement of 0.002899 mm are well within acceptable limits, indicating that the coupler will perform as intended during operation.

c. Bulkheads

- *Recovery Bulkhead*

Von Mises

[MPa] 0.01 85.11

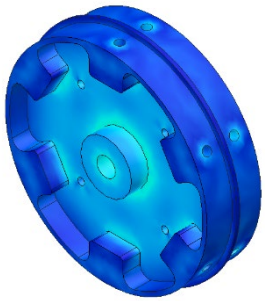

Total Displacement

[mm] 0 0.0299

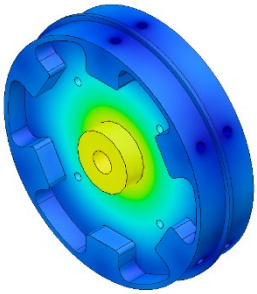

The recovery bulkhead is designed to withstand the forces and stresses experienced during a parachute recovery system deployment. To ensure its structural integrity, the bulkhead has been subjected to a snatch force of 3 KN. The FEA results have shown that the recovery has a safety factor of 3.231, indicating that the component can safely support 2.729 times the maximum expected load. This safety factor is well above the industry-standard safety factor of 1.5, ensuring that the component will not fail during deployment. It has also been revealed that the maximum stress experienced by the recovery bulkhead during the 3KN snatch force is 85.11 MPa. Additionally, the FEA results have shown that the displacement of the recovery bulkhead during the 3KN snatch force is 0.0299 mm. This small amount of displacement indicates that the component can maintain its shape and structural integrity even under high stress.

- *Thrust Bulkhead*

Von Mises **Total Displacement**

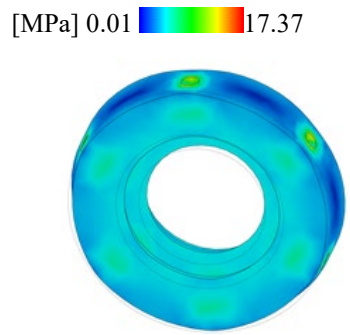

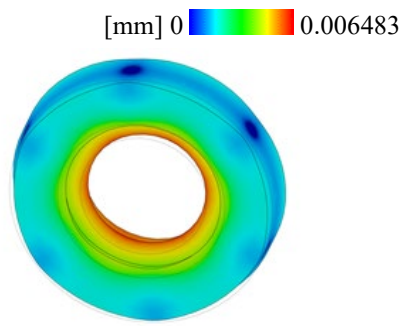

Salvaging the old design, which was made to hold M class COTS Cesaroni Motor, the maximum stress of 17.37 MPa is well within the allowable stress limit for the material used in the thrust bulkhead. Therefore, the component will not experience any permanent deformation or failure due to this loading condition. Similarly, the maximum displacement of 0.0064 mm is well within the acceptable limit. The FEA analysis shows that the thrust bulkhead is safe to use under a force of 6000N, which is almost double the maximum thrust generated by an M-class motor. The maximum stress and displacement are well within the acceptable limits, indicating that the component will not experience any permanent deformation or failure.

- *Aft Bulkhead*

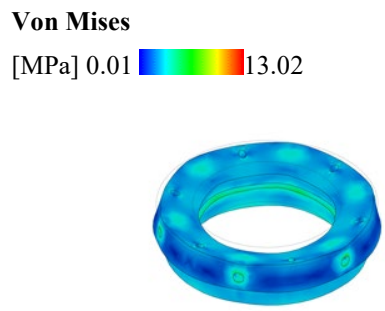

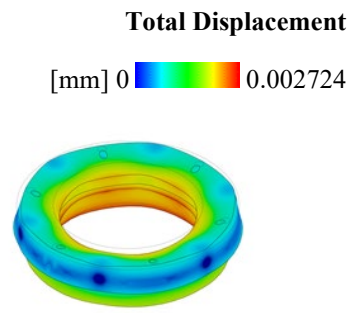

The FEA results indicate that the aft bulkhead has a maximum stress of 13.02 MPa and a maximum displacement of 0.002724 mm when subjected to the given load. The stress is well below the yield stress of the material, indicating that the component is safe to use under this loading condition.

e. Manufacturing

The manufacturing of rockets is a complex and expensive process, requiring the use of high-performance materials and advanced production techniques. This rocket is built using composite materials and metal alloys and additive manufacturing techniques. Even though most of the manufacturing is done in house, few of the components were machined outside due to unavailability of VMC.

a. Composites

The Team has invested significantly in its in-house SRAD facility to carry out the composite manufacturing process. The facility is equipped with the necessary tools and equipment to ensure precise and efficient fabrication. Key steps in the composite manufacturing process at SRAD include Preparation, resin mixing, wet layup, curing and finishing.

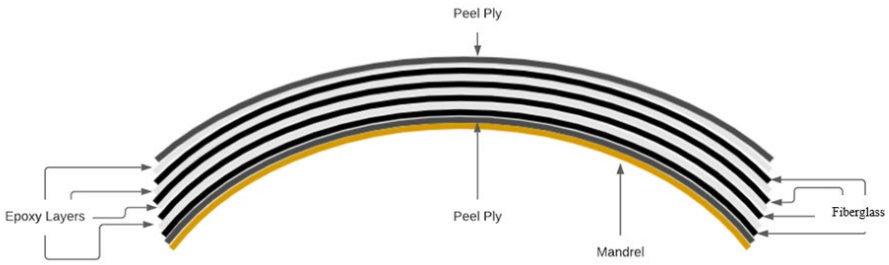

Figure II-13 Fiberglass Composite Layup Process

Figure II-14 Fiberglass Curing in Sun-Light

Figure II-15 Nosecone with 3d Printed Female mold

The team utilizes 400 gsm (grams per square meter) fiberglass fabric for the fuselage. This specific weight ensures a balance between strength and weight, meeting the structural requirements of the rocket while keeping it relatively light. For the nosecone, the team has opted for 240 gsm fiberglass fabric. This lower weight fabric ensures reduced mass at the tip of the rocket, thus aiding in the overall stability during the flight trajectory.

Table 10. E Glass Fiber GSM differences

Property	400 gsm FG	240 gsm FG
Strength	Higher	Lower
Thickness	Thicker	Thinner
Rigidity	More	Less
Durability	More	Less
Weight	Heavier	Lighter
Cost	More Expensive	Less Expensive

b. Metals

The table below provides information on various metal components used in the manufacture of Stellar-Eye. It includes details on the manufacturing process and materials used for each component.

Table 11. Machining Techniques Information

Part	Manufacturing Process	Description	Stock Material
Nosetip	CNC Lathe	Nosetip is a conical metal component typically located at the top of a rocket. Manufactured using a CNC lathe, which is a machine tool used to produce cylindrical or conical shapes by removing material from a workpiece using a rotating tool.	6061 Aluminum Round Bar
Nosetip Retainer	CNC Lathe	A metal component used to secure the nosetip in place. Manufactured using a CNC lathe	6061 Aluminum Round Bar
Aft Bulkhead	CNC Lathe	A metal component located at the rear of a rocket or missile. Manufactured using a CNC lathe	6061 Aluminum Round Bar
Tube Coupler	Lathe	Used to attach two separate bodies to the fuselage. Manufactured using a traditional lathe machine	6063 Aluminum round pipe
Recovery Bulkhead	VMC	It is a metal component used to attach parachutes and other recovery hardware to a rocket. Manufactured using a VMC, which is a machine tool used to produce a variety of shapes by removing material from a workpiece using a rotating tool.	6061 Aluminum Round Bar
Tender Descender	VMC	Line cutter device commonly used in rocketry for the recovery of rockets. Manufactured using VMC	6061 Aluminum Square Bar
Fins Attachment	VMC	Used to attach fins to a rocket. Manufactured using a VMC.	6061 Aluminum Square Bar
Fins	Laser Cutting	Fins are the metal components that are attached to the body of a rocket to provide aerodynamic stability. Manufactured using a laser cutting process, which uses a high-powered laser to cut and shape metal sheets into the desired shape.	Aluminum 6061 Sheet
Centering Rings	Laser Cutting	Centering Rings are laser cut and is used to hold motor in place.	Aluminum 6061 Sheet
Nozzle and Forward Closure	CNC Lathe	The rocket nozzle accelerates and directs exhaust gases, converting thermal energy into kinetic energy to generate thrust. The forward closure seals the propellant and internal components, ensuring all thrust is directed through the rocket nozzle.	Aluminum 6061 Round Bar

Figure II-16 From Left, Coupler on Lathe Machine, TD Pins on VMC, TD Pins and Base

c. Additive Manufacturing

Additive manufacturing, also known as 3D printing, has revolutionized the manufacturing industry by allowing to produce complex, customized, and lightweight parts with improved performance and reduced lead times. One area where additive manufacturing is gaining traction is in the production of high-power rockets, which require precision-engineered components that can withstand extreme temperatures, pressures, and vibrations.

The team has produced most of their components for the project in-house by utilizing a 3D printer, specifically an Ender 3 model. The components were mainly printed using PLA+ and ABS material.

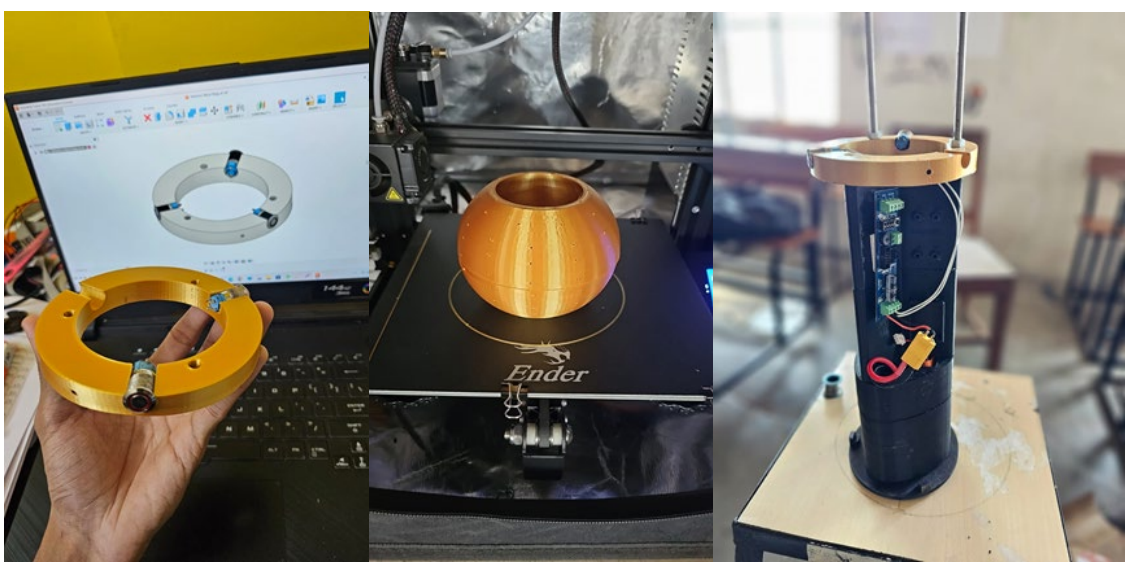

Figure II-17 From Left, Avionics Bulkhead with arming switches, Payload Shell, Avionics Stack

Table 12. 3D printed parts infill information rubric

Component	Material	Print Time	Infill Percentage
Avionics Bulkhead	PLA+	3 hours	40%
SRAD Avionics Stack	PLA+	10 hours	50%
COTS Avionics Stack	PLA+	18 hours	50%

Payload Shell	ABS+	20 hours	40%
Boattail	PLA+	9 hours	50%
Nosecone Female Mold	ABS	23 hours	30%
Grains Casting Tube	ABS	4 hours	95%
Casting Tube Endcap	ABS	8 hours	95%
Spacers	ABS	1 hour	100%

3. Recovery Subsystem

a. Design Overview

Recovery is one of the most important parts of the flight, and often the hardest to get right. For this reason, our recovery system is made to be as simple and as reliable as possible. We are using techniques that are proven by the high-power rocketry community. We conducted multiple successful ground-based experiments with this setup in 2022 and 2023 and an integrated test that included a combination of parachutes, recovery harnesses, and ejection charges with a very low failure rate. This experience and simplicity allow the recovery system to be integrated quickly and easily and allow the focus to go to other more complicated parts of the rocket.

The team opted for a dual-deploy recovery system to get accustomed to the reefing setup. Currently, dual deployment is achieved through a single-opening where 2 chutes get off a single opening. This configuration was chosen because it requires only one opening to deploy both chutes, with the main chute in the reefed state, which gets de-reefed by cutting the drogue line to allow the main line to fully open. Additionally, this technique was chosen as it was a new challenge for the team.

The ejection of the parachute is achieved through a set of primary and backup black powder charges deployed by COTS altimeters at apogee and with a delay of 2 seconds respectively. Post which comes down under drogue. At 450 m, a line cutter assembly cuts the drogue line which makes it pull the main chute out of its bag, reducing the descent velocity even more. Finally, in order to recover the rocket once it lands, the team will use both the GPS coordinates transmitted by the COTS GPS and the dispersion of where it is expected to land, obtained by the trajectory simulation.

b. Purpose and Goals

The sole purpose of the Recovery Subsystem is to ensure the safe descent and recovery of the vehicle. According to LASC DTEG 4.2.1, the descent rate for the drogue chute should be 20 − 45m/s, while the main chute descent rate shall be below 10m/s keeping this in consideration and Interfacing with the Avionics and Aerostructures Subsystems, the Recovery Subsystem ensures appropriate and successful implementation of parachutes, shock cord, parachute protection, and recovery hardware.

c. Design Specifications and Justification

The vehicle's recovery subsystem is mostly COTS, consisting of the drogue and main parachute from the rocketman parachutes and fruity chutes respectively along with that parachute bags from apogee components. A lot of parts in recovery subsystem were designed SRAD to eliminate logistical problems, this includes Tender Descenders, Nylon Shock Cord, and black powder. All the recovery components are in the recovery bay up top, once deployed, the rocket comes down under the recovery as one big piece.

i. Parachute Connections

The dual deployment configuration is connected and packed compactly as shown in Figure II-18 and can be divided into 3 separate events:

1. Drogue Deployment: On the ejection of the nosecone, the drogue chute which is wrapped around the parachute protector gets unfurled and separates the rocket into 2 halves, the nose cone and the rest of the fuselage.
2. Reefed State: After the rocket descends under the drogue, the fuselage end of the drogue line (2.5m and 0.5m line in figure) gets tensioned limiting the main chute from opening. Once the rocket descends to 450 m the line cutter assembly releases and leads to main deployment.
3. Main Deployment: Once the line cutter disconnects, the main chute line gets tensioned pulling the main chute out of its bag instantly bringing down the descent velocity and allowing for soft landing on the ground.

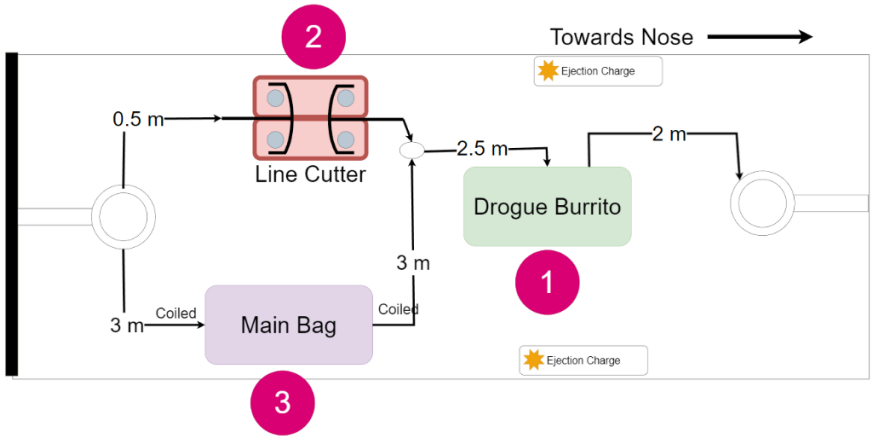

Figure II-18 Recovery hardware connections and legends

ii. BP ejection system

For drogue, 2 sets of 7g 2F black powder are used to pressurize the recovery tubes and eject the nose cone, and 1g 2F BP for the Line Cutter. This number was found experimentally by ground testing with different-sized charges. For the competition, additional ground tests will be performed on-site with FFg black powder on the launch site to figure out the exact size of the ejection system. For now, the team relies on online calculators to figure out the sizes, 2.12g and 0.4g respectively. For the backup charges, the nosecone charge will have an additional gram just to make redundancy slightly energetic, while keeping the line cutter charge the same.

iii. Reefing

At apogee, the nose cone ejects when the black powder triggers from the COTS altimeter's signal and all the recovery devices exit the nose cone section while staying tethered with the rocket by shock cords. Under the drogue descent, the main chute stays inside the parachute bag and stays limited by the line cutter assembly. At 450 m, the 2 redundant tender descenders fire their black powder charges simultaneously cutting the line between the drogue and the rocket. This makes the drogue pull out the main chute off its bag, bringing the touchdown velocity to a safe value.

The 2 tender descenders are connected such that either of the altimeters sends the ignition signal, the charges would fire up, and separate the drogue tethered with the rocket. Courtesy of Monash University for coming up with the design, the team opted to use a custom aluminum anchor connecting both the tender descenders designed in such a way that the line gets separated even if one of the charges fires, while also making sure the anchors don't slip off under the drogue descent which would create a premature main deployment.

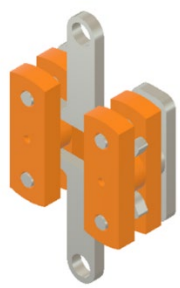

Figure II-19 Parallel TD/Line Cutter assembly setup

iv. Recovery Hardware

a. Shock Cord

To enable stress dissipation during deployment and to keep the lines orderly in the rocket, the primary Nylon shock cord is bundled in alternating zig zags with masking tape wrapped around each loop. The bundles are loosely tied with elastic bands to control unraveling and offer additional stress mitigation. The bundles are stored in the recovery bay, right above the recovery bulkhead and surrounding the eyebolt. The Nylon shock cord is connected to

the main eyebolt on the recovery bulkhead by a quick link, which prevents the main shock cable from twisting. and similarly done to all the connections shown Figure II-18

b. Eyebolts and Connecting Links

Quick links are used to attach the shock cords to the eyebolts which were bolted to the bulkheads. The parachutes have a swivel link by which the shock cords were attached to the parachutes. The quick links and swivel links were made of steel.

- Quick Links:
  - 5/16" SS with a load rating of >4,000N
  - Quantity: 12
- Eyebolts:
  - M12 Forged Steel Eyebolts with a load rating of >9,000N
  - Quantity: 2
- Swivel Link:
  - 6673N SS Swivel
  - Quantity: 2
- Anchors
  - T anchors made of Al with load rating of >1,000N
  - Quantity: 2

v. Snatch Force

The snatch force was calculated with the following equation.

$$F=\frac{1}{2}AC_d\rho_o\upsilon^2$$

Where is C_d the drag-coefficient, ρ_o is the air density, A is the reference area and υ is the velocity of the rocket. Using this formula, the snatch force due to the drogue chute is 102 N and the snatch force due to the main chute is close to 2500N and can go up to 2900N in the worst-case scenario. Which can be easily sustained by the shock cord and other recovery hardware selected by the team.

4. Avionics Subsystem

a. Design Overview

The purpose of the avionics subsystem in a rocket is to manage and control the various electronic systems on board. One important component of this subsystem is the altimeter, which measures the altitude of the rocket during flight. In this case, the avionics subsystem is designed to accommodate both Commercial Off-The-Shelf (COTS) altimeters and Student Researched and Developed (SRAD) altimeter, Endeavour.

The avionics subsystem also includes a COTS GPS system, which serves as the primary navigation system for the rocket. The GPS system is responsible for determining the rocket's position and tracking its trajectory during flight. Each device is powered separately to ensure the redundancy and reliability of the electronic devices in the avionics subsystem.

The Avionics Stack has been thoughtfully engineered to accommodate the three altimeters and GPS unit. It features separate switches which can be armed independently that are strategically mounted on bulkheads for easy access and control. This approach ensures optimal performance and reliability.

b. Purpose and Goals

The main purpose of this subsystem is to ensure the safe deployment of parachutes by firing the black powder charges at the rocket's apogee and main altitude. Additionally, it is responsible for collecting crucial flight data, which is then utilized to monitor and track the rocket's performance. The team's primary objective is to thoroughly test and validate the accuracy and effectiveness of the Endeavour's apogee detection algorithm. This algorithm is essential in accurately detecting the rocket's highest point of flight, which is crucial for the deployment of parachutes. Furthermore, the functionality of the telemetry and ground station is also a key focus for the team. These systems enable the real-time collection and transmission of important flight data, allowing for continuous monitoring and analysis of the rocket's behavior throughout its trajectory. By ensuring the proper functioning of COTS altimeters, the apogee detection algorithm with telemetry and ground station, the team aims to guarantee a successful rocket launch and a safe descent with parachute deployment at the designated altitudes.

c. Design Specifications and Justification

i. COTS

Featherweight GPS (from Featherweight Altimeters) is our COTS GPS and primary rocket tracker which works on a 33 cm wavelength band and 903 MHz frequency.

To ensure that the rocket is safely recovered, the team will rely on Commercial Off the Shelf (COTS) altimeters that detect the apogee and activate the drogue and main chute at the set altitudes. Specifically, the team will use the RRC3 and EasyMini altimeters from Missile Works and AltusMetrum respectively for Stellar Eye. The RRC3 is programmed to deploy the drogue chute at apogee, while the EasyMini triggers deployment 2 seconds after apogee. Both altimeters are placed on the Avionics Stack and are set to deploy the main chute at a height of 450 m.

ii. Endeavour

The SRAD board named Endeavour is designed to provide accurate and reliable flight data to the team during a rocket flight. It incorporates a range of sensors, including accelerometers, gyroscopes, and barometers, to measure various parameters such as altitude, acceleration, orientation, and atmospheric pressure. Endeavour will only collect data for this iteration, but it also contains dedicated channels for releasing the parachute and other recovery systems, which may be used as our recovery altimeter in future launches if further testing is successful. This flight will verify the apogee detection algorithm giving us assurance for future flights.

iii. Apogee Detection Algorithm

The apogee detection system works by constantly monitoring the altitude of the rocket using the barometric pressure sensor. As the rocket ascends, the board keeps a vigilant eye on the altitude and compares it to the previous readings. In case the altitude starts to decrease, it triggers an algorithm that samples the next set of values and calculates the average difference between the current altitude and the previous altitude.

The reason to take an average is it helps in adding an extra level of accuracy to confirm the ongoing descent stage of the rocket. If the average is smaller than zero, then the apogee is detected and though the deployment channels are not connected to any charge it swiftly springs into action and signals the deployment of the drogue chute, as it gets under 450 m it deploys the main chute ensuring a smooth and safe landing of the rocket.

As the team uses a dual-core processor, the algorithm simultaneously runs on the second core while sensors acquire the data on the first core which makes the algorithm efficient.

iv. DAQ

The Endeavour board serves as an excellent DAQ (Data Acquisition) unit that seamlessly captures crucial metrics such as pressure, altitude, temperature, latitude, longitude, and more from the diverse sensors integrated into it. The data collected is then securely stored on the onboard memory card to utilize it for future purposes. This allows the board to consistently maintain an accurate record of the various flight stages to support the respective events.

v. Hardware Narrative

Endeavour is a 2-layer Black Printed Circuit Board (PCB) with a sleek dimension of 100x40 mm. This high-quality board features two layers - the Power plane (Vcc) and the Ground plane - to ensure maximum performance and efficiency. With Endeavour, we can be assured of seamless connectivity and a stable power supply in all your designs.

Figure II-20 Endeavour Printed Circuit Board

vi. Telemetry

The main objective of the Ground Station subsystem is to view and analyze real-time flight data. The received data is visualized in Grafana using graphs, tables, maps and charts. The transmission and reception are done using the Xbee S3b Pro module. The ground station will receive data parameters such as altitude, temperature, pressure, speed, acceleration, latitude and longitude transmitted by Endeavour at a frequency of 900 MHz.

1. *Telemetry Hardware*

Acquired data is received using a 33cm Log-Periodic Dipole Array or LPDA antenna connected to the Xbee Module, while the transmission is concluded using an omnidirectional antenna. This type of LPDA antenna has a longer range and higher gain than standard Yagi and Omnidirectional antennas. A Nuand BT-100 bias tee power amplifier is attached in between the antenna and Xbee module for overall augmentation in the gain of transmission as well as recession. The Xbee module will be connected to Endeavour for DAQ. Concurrently, the XBee module at the ground station is set up with a handheld data processing device with the team.

2. *Telemetry Software*

Telemetry software interfaces the team's flight computer's Xbee module and our dashboard. It works in 3 different parts:

- Conversion of raw data into variables
- Database management of those variables
- The visual interface of the collected data

For the conversion of raw data received by the Xbee module into processable variables, "NODE-RED" software is used. Node-Red is an IOT interface software which allows the user to connect to IOT devices in a "No-code" manner. Similar to a flow chart where each flow is a module on its own, node-red splits the raw buffer data into separate variables and logs them into our database. This software is also responsible for converting one data into another through physical formulae as soon as the signal is received, which is done through simple coding.
For database management, the team is using "INFLUX DB" which is a database management software that works on localhost making it more secure. Influx DB separates every data variable into separate tags and integrates easily with our visual software "GRAFANA". Though Influx DB already can visualize the received data into graphs and charts, it lacks the GPS monitoring system which would be crucial for satellite imaging of landed rockets and its position on handheld devices.

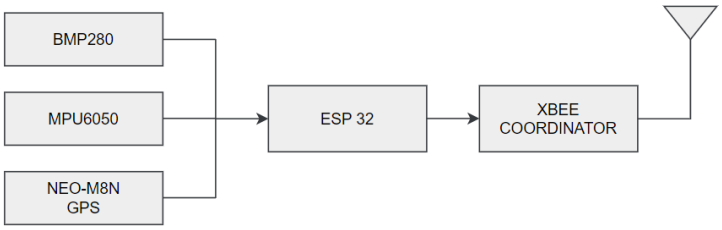

Figure II-21 Endeavour data transmission

3. *Ground Station Client Side Setup*

The ground station software comprises two integral components- Grafana and InfluxDB. InfluxDB is a highly efficient database management system that ensures reliable storage, retrieval, and management of data. Grafana, on the other hand, facilitates the visual representation of the data collected through the telemetry system in an interactive dashboard interface. The dashboard interface provided by Grafana would allow us to track the rocket system in real-time by mapping the coordinates collected by the telemetry system. This feature not only ensures quick access to critical information but also helps in the detection of any anomalies or discrepancies in real-time.

As a measure of ensuring the accuracy of the data collected, every piece of information logged by the data logger would be cross-checked through the telemetry system, which would allow for the detection of any potential issues such as a corrupted SD card that may affect data accuracy. Moreover, the dashboard interface would also display the received coordinates on a map, enabling us to track the rocket in case of a successful landing or predict its flight path in the event of a mishap. This feature would undoubtedly prove beneficial in determining the possible causes of any anomaly observed during the flight.

Overall, the combination of InfluxDB and Grafana would provide a high-end ground station solution with top-tier data management and visualization capabilities, making it an integral component of our rocket launch system.

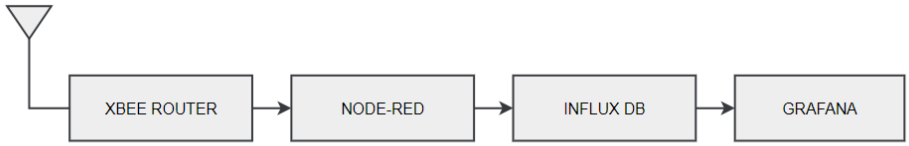

Figure II-22 Ground Station setup for the reception

vii. Power Requirements

To ensure reliable and redundant altitude measurement during flight, both the primary altimeter RRC3 and the backup altimeter EasyMini will be powered separately by two high-performance 7.4 V 2200 mAh LiPo batteries. The SRAD board Endeavour and its telemetry will be separately powered by two 18650 3.7 V Li-ion cells with a capacity of 2500 mAh each, providing ample power for sustained operation. These carefully selected and dependable power sources will work in harmony to ensure the safety and success of the flight mission.

viii. Wiring Diagram

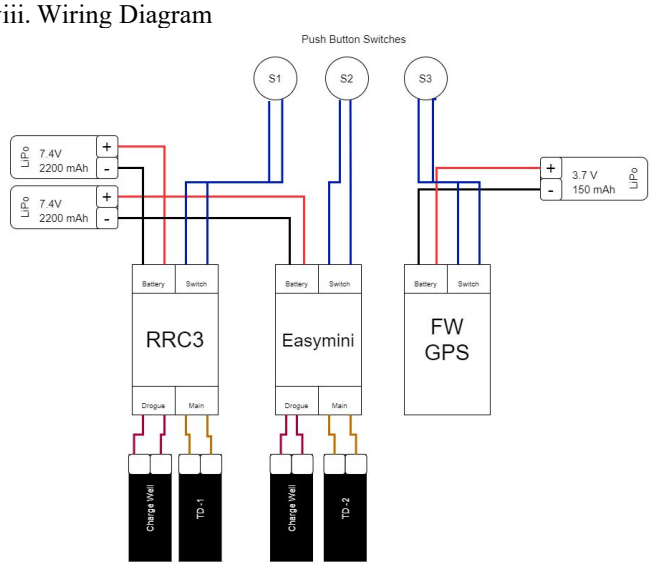

Figure II-23 COTS Recovery wiring diagram

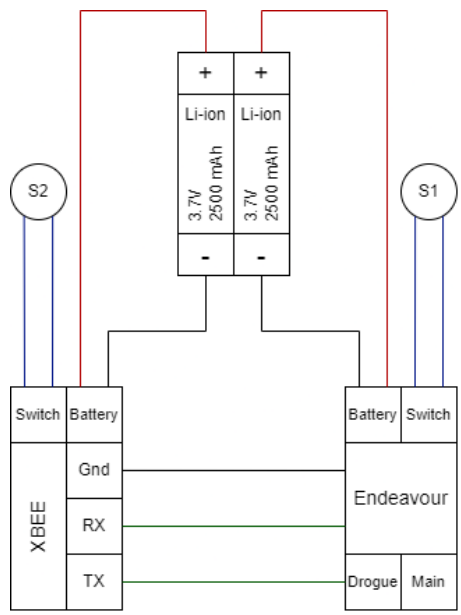

Figure II-24 Endeavour wiring diagram

---

d. Design Analysis

Table 13. Tests Conducted

Design	Analysis
COTS Altimeters	Vacuum Chamber tests
COTS GPS	Tested
Apogee Detection Algorithm (Endeavour)	SIL Simulation, Vacuum Chamber, Static Nosecone and Tender Descender Ejection test, Free Fall
PCB	ERC and DRC tests were conducted
Telemetry	Various long-range tests were conducted using different antennas and amplifiers

5. Payload Subsystem

The function of the payload subsystem is to carry an acoustic levitator to an altitude of 1,000 m, for studying acoustic levitation in an elevated environment of high thrust forces and low pressure; and its dampening properties on the object that would be levitated**.** The goal of the payload experiment includes study of the doppler's effect inside experimental closure along with the evaluation of performance of the levitation mechanism in order to promote future iteration and development of such scientific payloads.

Figure II-25 LEVI closure Suspended view

The **Project LEVI** is a non-Deployable Payload of an Acoustic levitator which is an array of ultrasonic transducers to generate a standing acoustic pressure field for exerting radiation force on small objects, allowing them to be trapped and relocated in three-dimensional space and studying the doppler effect acting on overall mechanism. With the purpose of using this knowledge to design a stable containment unit for various fragile materials that the team find potential payload subject, the appropriate data will be collected. The levitation works based on standing waves and nodes-antinodes, hence ultrasonic transducer has been chosen to have frequency up to 40 kHz with a gain of 112 dBm. Nearly 32 such transducers are arranged in a center-oriented manner to make the pressure sufficient on the center by creating a low-pressure region.

The initial liftoff of the launch vehicle results in pseudo thrust forces acting on the low-pressure node, shifting it in vertical orientation. Thus, evaluating the doppler effect caused in the pressure and force will be recorded using pressure sensitive onboard equipment. As the altitude of the rocket increases, the internal air pressure will be suffering a decrease along with an instantaneous excessive increase in the thrust and hence, the structure of payload is designed in such a way that it will concentrate the entire air pressure on the center altogether to provide maximum amount of levitation on the levitating subject.

a. Design Overview

Considering multiple geometrical structures to be used as the levitator closure, the spherical shell is optimal for levitation against other shapes. The design consists of a spherical closure of wall width 5.3 mm. while the outer wall of the design contains circular indents according to the dimensions of the transducers. These indents are connected to each other with channels, which allow for a clean and systematic wiring assembly of the closure. The levitator closure, supporting bulkheads and the electronics sled are 3D printed using the team's in-house 3D printer.

Figure II-26 From Left, LEVI Closure isometric view, Closure Section view

In the microgravity environment the rocket will attain while power-on flight, the stable areas within the nodes must be large enough to support the floating object. Here on Earth, the high-pressure areas just below the node must be large enough as well. For this reason, the object being levitated should measure between one fourth and one third of the wavelength of the sound. Objects larger than these limits are too large to be levitated, i.e., the field is not large enough to support them. The higher the frequency of the sound, the smaller the diameter of the object which is possible to levitate. Objects that are the right size to levitate must also be of the right mass. In other words, establishing whether the sound wave can create enough pressure to counterbalance the pull of gravity on the object is required.

Given the overall design of the levitator, a cylindrical metallic enclosure made from mild Steel covers the entire structure with operable Endcap of Aluminum 6063 from top and bottom where the arming system is placed at the bottom lid. Two bulkheads are designed for supporting the levitator shell. The bottom bulkhead is also used for holding the electronics bay for operating the payload. The battery stack for payload is situated below the electronics bay, connected to an arming switch from bottom.

The levitator shell is supported by a bulkhead from top while the electronics sled from bottom to ensure minimal flutter while flight. The three BMPs are attached to a shelf, one at the center and two equidistant from it, one above and one below. The electronics sled is designed to house the components to power the transducer shell as well as the DAQ circuit.

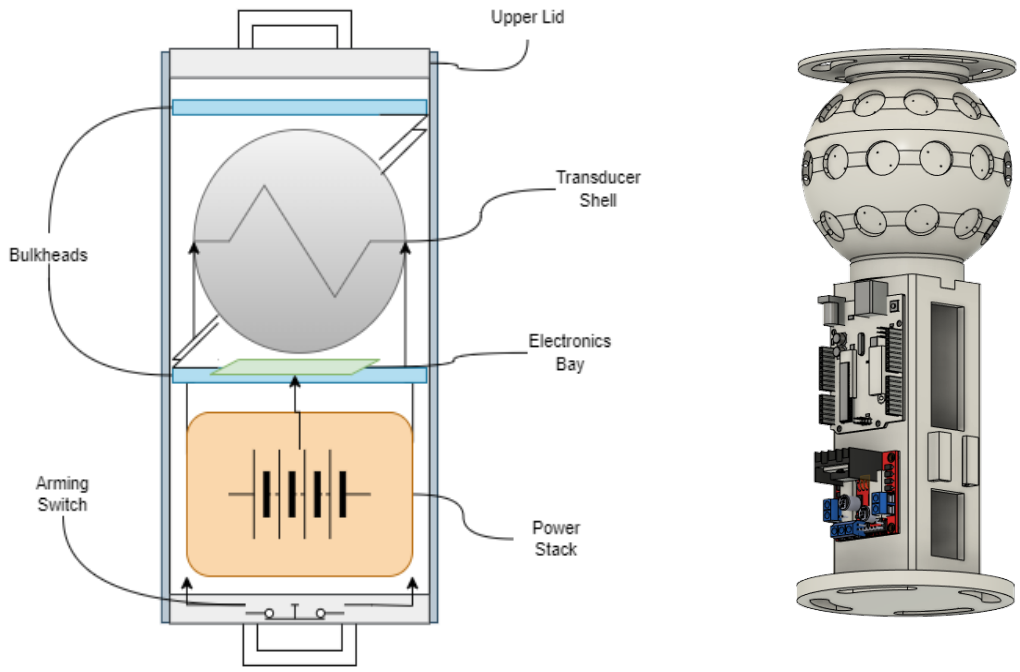

Figure II-27 From Left, System overview, CAD mockup

b. Purpose and Goals

The goal of the payload system includes monitoring of change in location of center node with respect to the geometric center of the closure.

During initial liftoff, the payload and other parts of the rocket are most vulnerable to extreme inertial force, which can dislocate a fragile payload. To ensure that the change in acceleration does not cause damage to any delicate objects that are to be transported to space, the idea of acoustic levitation is used. Any object with small enough mass and shape can levitate inside this node. This is due to the node being surrounded by high pressure antinodes, which act as walls around the center node.

Space transportation is a challenge when it comes to fragile objects. The standing wave acts as a cushion to the object levitating inside the closure. If the object experiences sudden acceleration, it will be negated by the opposing force of the node. The post analysis will apprise the use of levitator as a cushioning towards potential payload to captivate until stipulated destination.

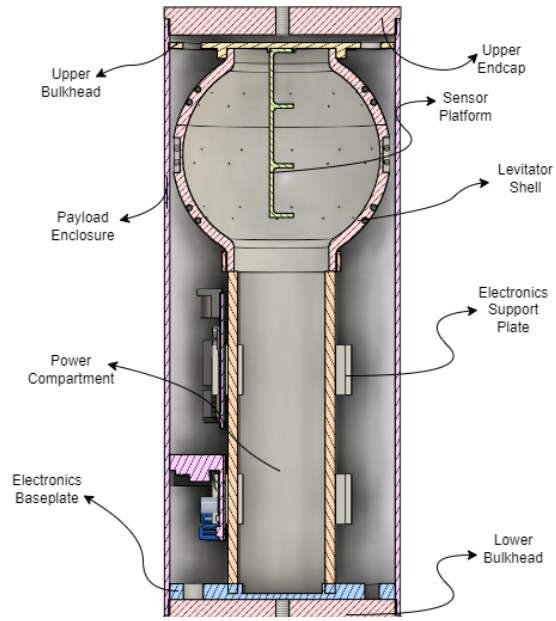

Figure II-28 Payload assembly

c. DAQ

The data acquisition of project Levi includes a series of pressure sensors and a gyroscopic sensor. These sensors are used to track the changes in pressure gradients and vehicle orientation with a synchronous timestamp. The node about which low pressure area is generated will be encountering an impulsive drag due to liftoff. Thus, the pressure sensors should be detecting the change in low pressure node as a downward shift. The recorded data will be logged to an onboard SD card. In this closure, a single low-pressure point is created at the center of the sphere.

After liftoff, the launch vehicle will be experiencing its maximum impulse during its burn time. In this interval, a huge backward drag will be introduced to the payload. It will cause a sudden series of spikes in pressure values acquired from the time-synchronous BMP-280 sensors. By plotting this data, the team aims to realize the change in location of a potential payload subject which can be levitated at the node.

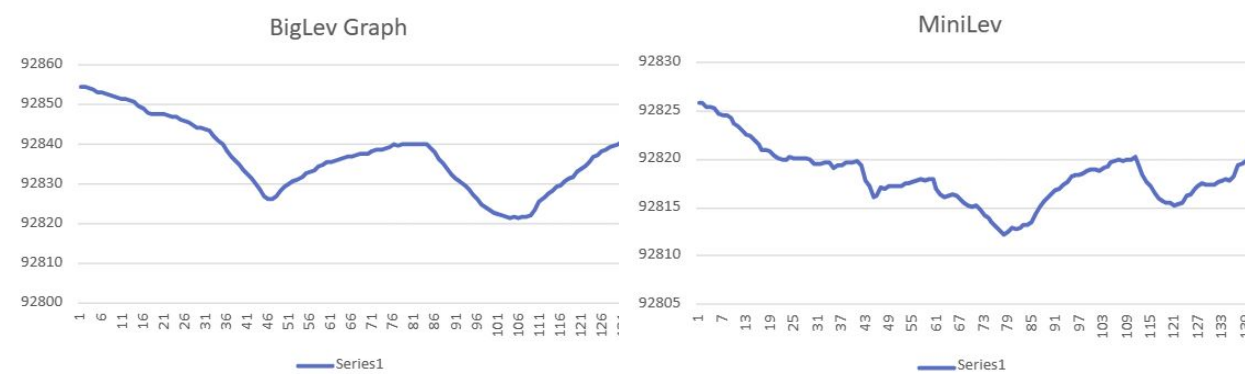

Figure II-29 From Left, BigLev pressure data, MiniLev pressure data

d. Power Budget

For continued operation of the levitator, along with the electronics bay, Li-Po batteries with a capacity of 14.8V and 3300 mAh are connected to electronics. The DAQ module uses 7.4 volts at 230mA for continuous operation. The shell is expected to operate for 1 hour with peak current of 2600mA. The DC current supplied to the motor driver is rapidly altered by using internal flags of Arduino Uno. Thus, the motor driver is undergoing a drop in voltage of 35%. Hence, enough voltage is provided beforehand to ensure a successful payload operation throughout the flight.

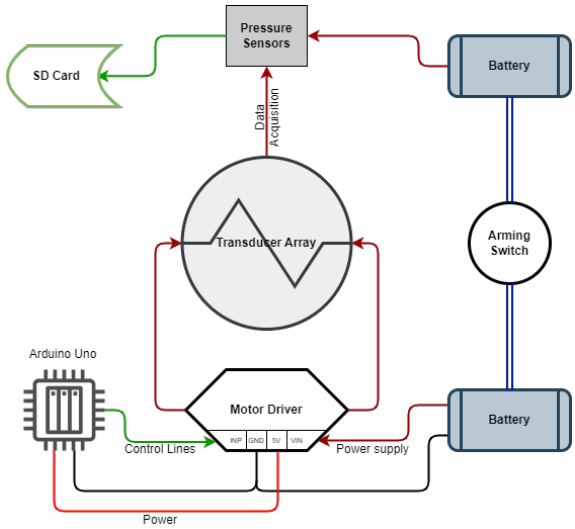

Figure II-30 System architecture

6. Flight Simulations

To simulate the trajectory of the rocket, the team relied on the results of RocketPy, a 6-dof rocket simulator made by Project Jupiter. To create the simulation, multiple data sources were referred for this: OpenRocket and Fusion360 to accurately find the CG points for the rocket and the motor. RasAero-II for drag values on the rocket when it's powered-on and powered-off. And the environment data for the launch site from ECMWF Climate data store.

After this, the motor was defined as an input for the rocket. With the motor defined, the physical and geometric parameters of the rocket were obtained using Fusion 360, where a model of the rocket was precisely created. With all the physical parameters created, the CAD optimized masses were fed to OpenRocket to calculate the overall CG of the rocket.

For the drag data, RasAero-II was used with the Rogers Modified Barrowman Equation and a x turbulence model after assessing the quality of the overall fuselage and the presence of additional buttonhead screws protruding out of the body. Feeding the data from OpenRocket and replicating that on RasAero-II, we got the power-on and off drag curve data for the simulation.

Before starting the simulation, three different scenarios were considered after assessing the possible failure modes: a nominal flight with chutes deployed at the right moment in time, a "main at apogee" scenario, and a ballistic flight. The parachutes described are the same as mentioned above. With that model, the most relevant simulation results are shown below by clubing data from RasAero-II and OpenRocket into RocketPy.

Table 1414 RocketPy Simulation Results

Events	SI	Events	SI
Initial Static Margin	2.52	**Freestream speed at apogee**	11.25
Static Margin at Burnout	3.08	**Time of Dis-reefing**	63.77
Launch Rail Departure Velocity	18.09	**Altitude of disreefing**	393.05
Time of Burnout	4.74	**Freestream speed at Dis- reefing**	21.04
Altitude at Burnout	403.64	**Time of impact**	115.57

Apogee time	18.14	**Impact vertical velocity**	7.39
Altitude at Apogee (AGL)	1344.85		

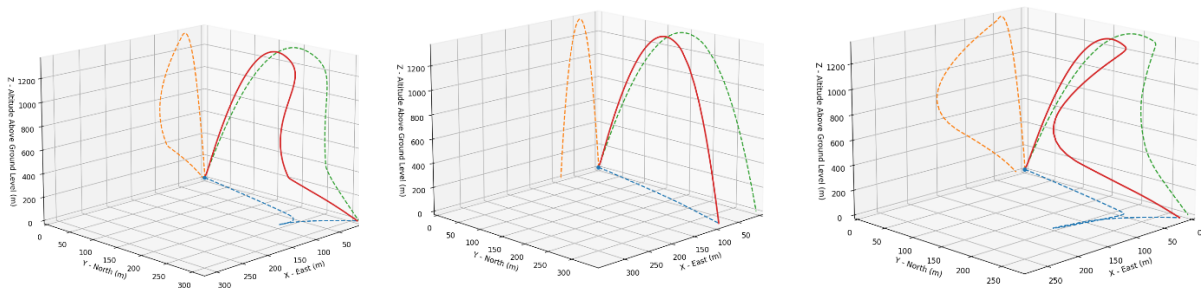

Table 1515 Stellar Eye trajectory when (left to right) nominal, ballistic, and main at apogee

III.Mission Concept of Operations Overview

General Conops

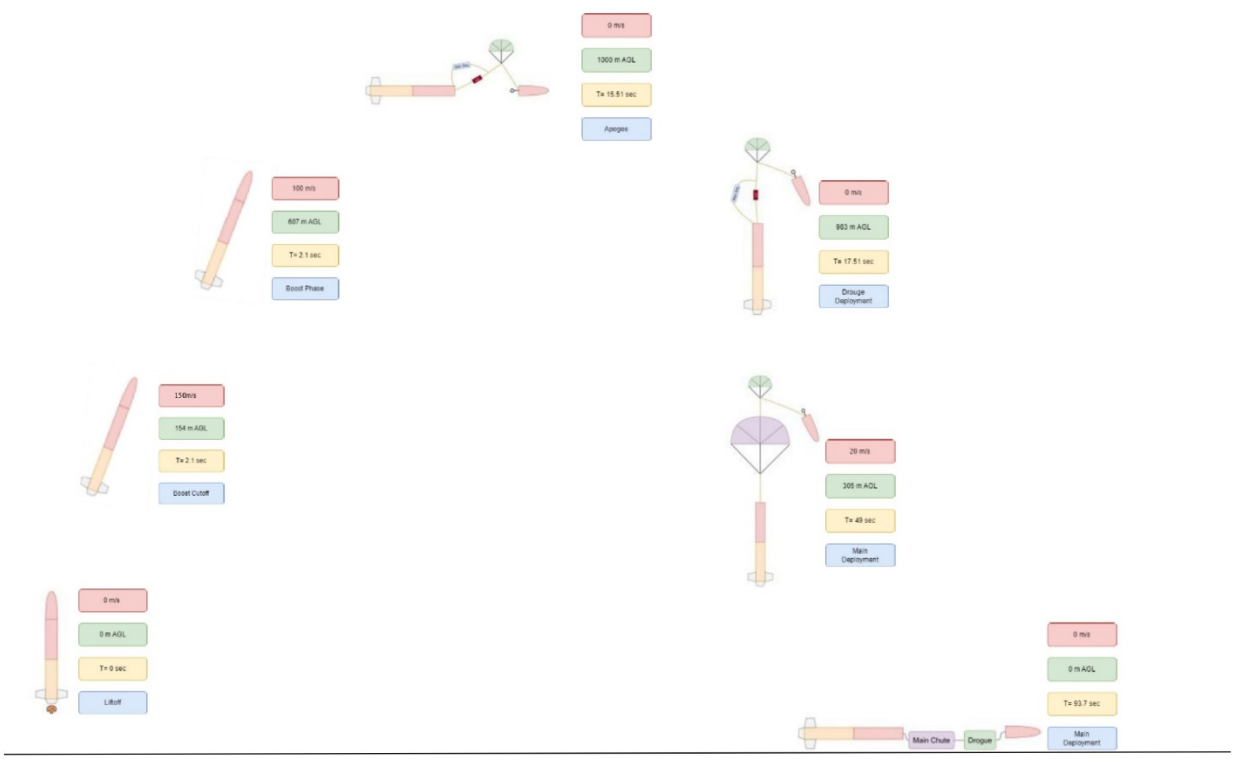

Figure III-1 Mission Con-Ops

The rocket's operation comprises several essential stages and principles. Prior to liftoff, the rocket undergoes meticulous assembly of its main components – the fuselage, motor, and fins – at the launch preparation station, where rigorous safety checks and inspections are conducted. Once all preparations are in order, the rocket is launched using an appropriate launch system and propulsion source. During its ascent, the rocket's onboard altimeter continuously tracks crucial metrics such as altitude and velocity. As it soars upward, the rocket attains its target apogee of 1000 meters (about 3280.84 ft), at which point the pilot chute is deployed. This action initiates the descent phase, with the onboard altimeter still closely monitoring altitude and velocity. At a predetermined altitude of 458 meters (about

1502.62 ft) tender descender links are separated and the main parachute is deployed. With the main parachute now engaged, the rocket descends safely and gradually until it reaches the ground, ensuring a safe and secure landing.

IV.Conclusions and Lessons Learned

The journey of STES Rocketry has been marked by invaluable technical lessons and team management experiences that have shaped its growth and success. The guiding principles of simplicity and reliability have been at the core of their design philosophy, enabling them to build integrated systems efficiently, troubleshoot effectively, and foster a continuous learning environment for their diverse team of students. Recognizing the significance of proper training procedures, the team has invested in imparting essential technical skills to new members, empowering them to excel in the development of rocket projects.

With steady growth in team size and projects, STES Rocketry embraced the challenge of managing a larger team and resources. The extended design cycles provided opportunities for tackling more complex projects, leading to the development of innovative rocket systems. After a long summer the return to in-person work not only facilitated practical engineering experiences for new members but also enabled effective knowledge transfer from experienced team members, creating a seamless transition between generations.

Looking ahead, the future of STES Rocketry appears promising, with a strong foundation built upon technical expertise, effective team management, and a commitment to continuous improvement. By valuing simplicity and reliability, investing in proper training procedures, and prioritizing comprehensive documentation and knowledge transfer, the team has solidified its position as a formidable force in the field of rocketry. With an enthusiastic and capable team, STES Rocketry stands ready to face new challenges, pursue ambitious goals, and soar to new heights in their pursuit of aerospace excellence.

Introduction

Title

STES Rocketry Team 73 - StellarEye

Short description

STES Rocketry's 8.8 ft tall HPR propelled by L Class motor to deliver a 4.5kg payload to 1 Km.

Eligibility

Choose Your Team

73 - STES Rocketry Team

Choose Your Mission

73-A - StellarEye

Is there a category change since Acceptance Announcement?

No

Category

1 km - Solid Motors

Demographic Data

This is all members working with your project including those not attending the event. This will help LASC promote the event and get more sponsorships and grants to help the teams improve the event.

Total Number of Members

33

Any changes to the team composition since the last report?

No

Readiness Review Video

According to Section 9.3. of the 2023 LASC Rules & Requirements Document, Teams shall submit a Readiness Review Video (RRV) for each Team's Mission.

Readiness Review Video (RRV) YouTube Link

https://youtu.be/BMZRM9jmR3o

Rocket Challenge

The section Rocket Challenge shall be filled ONLY if your Mission ID is related to an accepted Rocket Project. If you have more than one mission, you will need to fill the 2nd Progress Update multiple times. PLEASE ENTER NUMERIC DATA ONLY! For numerical fields, you shall only insert numbers and use periods as decimal separator (e.g., 14.2 not 14,2). You shall limit up to 2 decimal numbers. (e.g., 1.25 not 1.247).

Airframe Diameter [mm]

124

Vehicle Length [cm]
269
Vehicle Weight [kg]
20.1
Propellant Weight [kg]
2.95
Center of Pressure Location [cm from nosecone tip]
200
Center of Gravity Location [cm from nosecone tip]
165
Number of Fins
4
Motor and Propellant Discussion
Since the last update, the motor has been designed and simulated to determine an approximate figure for thrust, impulse, pressure, mach number, and temperature. This information was gathered for the aim of estimating the safety factor of the hardware we are utilising, and the results are rather impressive. As a result, the crew may proceed with the machining of the parts. Along with that team, we've been experimenting with several sorts of additives (catalyst), but they have yet to be physically tested as a packed motor, which can only be evaluated in static fire tests.
Propulsion System Tests
The team is relying on the data obtained from the simulations done on the motor parts and is now setting up a static fire test for late June.
Recovery System Discussion
Because we're aiming for a one-opening, two-chute deployment, we are utilizing a line cutter assembly. As a result, we're cutting the shock cord connecting the drogue and the recovery bulkhead with the parallel Tender-Descender. We'll connect two parallel TDs and pass an anchor from both ends so that when one of the TDs ignites, the anchor will be dragged off the TD and separate, cutting the line connecting the drogue and the recovery Bulkhead and inflating the main chute.
Agreement on 2023 LASC Requiremenst and Rules
All information filled in this form is the responsibility of the teams.
Do you agree with all Rules and Requirements of the 2023 LASC?
Yes

V.Appendix

Appendix A
SYSTEM WEIGHTS, MEASURES AND PERFORMANCE DATA

Table 15 16 Flight Parameters

Specification	Value	Value	Target	Units
Simulation Software	OpenRocket	Rocketpy	-	-
Launch Rail Length	6	6	-	m
Launch Angle	3	5	-	degrees
Lift-Off Thrust to Weight Ratio	5.21	6.48	>5	-
Launch Rail Departure Velocity	21.8	18.1	30	m/s
Static Margin	2.28	2.43	>1.5	-
Maximum Acceleration	98.1	97.23	-	m/s^2
Maximum Velocity	159	158.83	-	m/s
Maximum Mach Number	0.48	0.46	-	-
Predicted Apogee	1350	1344.85	1000	m

Table 1716 Propulsion Parameters

Property	Value
Propulsion Type	Solid
Manufacturer	STES (SRAD)
Casing Size (mm)	76 X 810
Class	L
Type	L920-P
Total Impulse (N-sec)	4356
Peak Thrust (N)	2280
Average Thrust (N)	1112
Burn time (sec)	4.74
Loaded Weight (kg)	7.632
Propellant Weight (kg)	2.95

Table 1817 Drogue Parachute Recovery Summary

Property	Value
Drogue Parachute Diameter (cm)	61
Drogue Parachute Drag Coefficient	1.5
Decent Velocity (m/sec)	22
Deployment velocity (m/sec)	75
Deployment acceleration (m/sec^2)	-9.8
Deployment velocity with 2 second delay (m/sec)	19.6

Deployment acceleration with 2 second delay (ft/sec^2)	-9.8
Shock load (lb)	27.464
Shock load with 5 second delay (lb)	143.48

Table 1819 Main Parachute Recovery Summary

Property	Value
Main Parachute Diameter (cm)	210
Main Parachute Drag Coefficient	2.2
Decent velocity (m/sec)	9
Deployment velocity (m/sec)	22.86
Shock load (lb)	514.95

Table 1920 Main Parachute Shock Cord Specifications

Property	Value
Material	Nylon Tubular
Length (m)	3
Width (cm)	2.5
Thickness (mm)	2
Breaking Load (lb)	4000

Table 2021 Drogue Parachute Shock Cord Specifications

Property	Value
Material	Nylon Tubular
Length (m)	3
Width (cm)	2.5
Thickness (mm)	2
Breaking Load (lb)	4000

Table 2122 Black Powder Specifications

Property	Value
Type	2F
Drogue Mass (g)	7
Main Mass (g)	0.8 (TD)
Drogue Backup (g)	9
Main Backup (g)	1 (TD)

Table 2223 Shear Pin Specifications

Material	Size	Shear Strength
Nylon	M4	143 lb_f

Appendix B

HAZARD ANALYSIS APPENDIX

THIS PAGE IS INTENTIONALLY LEFT BLANK.

Appendix C

RISK ASSESSMENT

THIS PAGE IS INTENTIONALLY LEFT BLANK

Appendix D

ASSEMBLY, PREFLIGHT, LAUNCH, AND RECOVERY CHECKLISTS

THIS PAGE IS INTENTIONALLY LEFT BLANK

Appendix E

ENGINEERING DRAWING

THIS PAGE IS INTENTIONALLY LEFT BLANK

#	Hazard	Cause(s)	Effect(s)	Probability of Occurrence (1-5) & Rationale	Personnel Severity (0-5) & Rationale	Equipment Severity (1-5) & Rationale	Personnel Risk Index (Probability * Severity)	Equipment Risk Index (Probability * Severity)	Acceptable?	Mitigation Plan	Personnel Severity (0-5) With Mitigation Plan	Equipment Severity (1-5) With Mitigation Plan
1	Solid motor ignites during transportation to the launch site	Igniter is left in the motor during transport, and igniter comes into contact with a battery; fire in the car	Motor emits hot exhaust gases and flame; risk of burning equipment and people	2 The solid motor must come into direct contact with an active ignition source in order for this event to occur. Which is unlikely in this case as the motor will be kept under sufficient protection shielding it from external ignition sources.	4 Severe burns due to exhaust gases likely; exhaust gases will expand to area around motor, so large hazard area	4 Motor exhaust gases can burn, melt, or otherwise thermally damage nearby equipment in the pickup truck bed or trailer bed	8	8	Acceptable upon completion of quality assurance review	Motor used for the rocket will be bought on-site at the launch, rather than transported by STES team members, which removes this failure mode from the team's operations. In addition, the ignitor will not be introduced inside the motor until the rocket is installed properly on the launch rod thereby mitigating any chance of accidental ignition.	0	1
2	Solid motor ignites during assembly of the rocket	Ignition sources (ex. ignitiers, batteries, flammable chemicals, lighters, live wires) present near the rocket assembly table come into contact with the motor's fuel grain	Hot, high-pressure exhaust gases from motor can damage equipment and hurt team members; if motor is loaded into rocket's motor mount, the rocket could shoot forward at high velocity and injure people downrange	2 The solid motor must come into direct contact with an active ignition source in order for this event to occur. Which is unlikely in this case as the motor will be kept under sufficient protection shielding it from external ignition sources.	5 Exhaust gas will severely injure any team members assembling the rocket; people downrange of the rocket will be severely injured if the rocket impacts them	5 The gas and flame emitted from motor could burn and deform other necessary rocket components	10	10	Acceptable upon completion of quality assurance review	All possible ignition sources will be removed from the table where the rocket is assembled; integrating the motor with the rocket's motor mount is on of the the last steps in the assembly procedure; igniter won't be inserted into the motor until the rocket is mounted on the launch rail	1	1
3	Solid motor fuel grains ignites during assembly of motor	Ignition sources (ex. ignitiers, batteries, flammable chemicals, lighters, live wires) present near the rocket assembly table come into contact with the motor's fuel grain	Hot, high-pressure exhaust gases from motor can damage equipment and hurt team members.	3 The solid motor must come into direct contact with an active ignition source in order for this event to occur. This is more likely in this case as the motor will not be shielded from any external ignition sources until it is installed properly in the rocket.	4 Exhaust gas will severely injure any team members assembling the motor	5 Motor will be unusable if the fuel grain is ignited and spent before the flight	12	15	Undesirable: Written and reviewed decision required to proceed	All possible ignition sources will be removed from the table where the motor is being assembled. In addition, the grain will be stored inside cardboard containers and away from any sources of heat to make sure that the internal temperature of the grain remain optimal and it doesn't catch fire.	1	1
4	Solid motor fuel grain damaged, cracked or crushed during assembly of motor	Heavy equipment or tools are dropped on the motor fuel grains while the motor is being assembled; motor fuel grains are dropped from a large height; motor fuel grains are damaged while being inserted into motor	Fuel grains can no longer be used in the motor; possibility of propellant fragments or powder being ejected from the motor to the assembly area, which poses a fire hazard	2 Nature of motor assembly demands direct handling of fuel grains. Therefore if carefully not handled, then the hazard could occur resulting in catastrophic failure. However, it is less likely to occur if members are trained in handling the motor and its grains properly.	3 Fragments of solid propellant are a fire risk to the team members if not immediately located and cleaned up	5 Motor will be unusable if the fuel grain is damaged	6	10	Acceptable upon completion of quality assurance review	Motor will be assembled on a table clear of any heavy objects that can damage the fuel grains; STES members will assemble the motor carefully to so the grains aren't dropped or otherwise impacted with a large force	1	1
5	Black powder ignites during transportation to launch site	Ignition sources (ex. igniters, batteries, flammable chemicals, lighters, live wires) are stored with the black powder during transportation and ignite	Black powder capsules explodes; can injure team members nearby or damage equipment being transported near the black powder container	1 Under existing safety regulations, ignition sources are never stored with the black powder during transportation. Hence, this event is less likely to occur.	4 Exploding black powder capsules will injure any team members if transported near people.	3 Black powder will be wasted before the launch; exploding black powder capsules could damage nearby equipment due to concussive force of the explosion	4	3	Acceptable without review	Black powder charges in the rocket itself won't be loaded with black powder until the final assembly; black powder is transported to the launch site in small, separate, sealed capsules to minimize the chance and magnitude of an accidental explosion; these capsules will be attached to the site of a vented container so an accidental explosion can be safely controlled	1	1

#	Hazard	Cause(s)	Effect(s)	Probability of Occurrence (1-5) & Rationale	Personnel Severity (0-5) & Rationale	Equipment Severity (1-5) & Rationale	Personnel Risk Index (Probability * Severity)	Equipment Risk Index (Probability * Severity)	Acceptable?	Mitigation Plan	Personnel Severity (0-5) With Mitigation Plan	Equipment Severity (1-5) With Mitigation Plan
				1	4	4						
6	Altimeters trigger ignition of the black powder charges during assembly of the rocket	Altimeters are prematurely attached to the wire leads of the black powder charges; altimeters are turned on and a sudden pressure decrease or an altimeter malfunction causes the ignition signal to be sent pre-flight	Black powder capsules explodes; force and hot gases from explosion will injure team members assembling the rocket; explosion could launch a segment of the airframe or a coupler away from the rocket at high speed injuring anyone downrange	Pre-launch procedures dictate that the rocket's avionics systems won't be turned on until the rocket is mounted on the launch rail reducing the probability likelihood of this event occuring.	Exploding recovery charges will eject hot gas, airframe segments and coupler at high speeds will injure any team members in the way.	Recovery system charges will have to be replaced; possible damage to parachutes, shock cords, avionics bay and payload.	4	4	Acceptable without review	All avionics switches will be turned off until the rocket is mounted on the launch pad to stop any false ignition signals due to electronics malfunctions. In addition, wire leads leading to the black powder charge will not be connected to any electronics systems thereby mitigating any chance of accidental ignition.	1	1
				2	5	4						
7	Black powder used for recovery system charges ignites while being loaded into the charge capsules on the rocket	Ignition sources (ex. igniters, batteries, flammable chemicals, lighters, live wires) are stored black powder charges during rocket assembly	Black powder ignites fuel grains, resulting in the rocket firing prematurely which could cause damage to the members and other equipment	Assembly procedures require that all ignition sources are removed from the assembly area when the black powder is poured into the charge capsules thereby reducing the probability of occurence.	Black powder container will be in the hands of any team members while loading so accidental ignition will cause severe bums or tissue damage to fingers and hands.	Black powder explosion will release hot gas that could damage the airframe, parachutes, shock cords, avionics bay or payload of the rocket	10	8	Acceptable upon completion of quality assurance review	Loading black powder into the recovery system's capsules will be the last step of the assembly procedure; black powder will be loaded on a table clear of any possible ignition sources by a trained STES member	2	1
				2	3	5						
8	Rocket airframe crushed by other equipment during transportation to launch site	Equipment not secured properly within rocket or truck bed, rough terrain during transportation	Unable to use airframe, resulting in inability to participate in competition	Rocket airframe will be secured in-place inside the transportation vehicle and will be packed away from any heavy equipment that could damage it to reduce any accidental damage.	Crushed or cracked carbon fiber composite tubes will expose raw carbon fiber and release microfibers into the air, which can irritate skin and respiratory passage without proper protective equipment	Rocket airframe would be unusable and the rocket could not be launched at the competition	6	10	Acceptable upon completion of quality assurance review	The rocket airframe and all other fragile components will be stored with utmost security so as to ensure that no accidental damage happens to any such parts. Preferably, all such parts will be transported seperately in a different vehicle with trained members for avoiding any kind of mishap	0	2
				2	0	4						
9	Forgetting necessary equipment	Lack of preparation	Unable to participate in competition	Equipment checklists will be prepared pre-departure to verify that all parts and equipments are accounted for to reduce the probability of such an event occuring.	Lack of equipments does not pose a direct hazard to the health and safety of any team members	Missing equipment will render the rocket unusable unless replacement tools or components can be found	0	8	Acceptable upon completion of quality assurance review	An extremely detailed SOP with the list of materials will be followed. It will be checked at least two times i.e. before and after every loading/unloading. This will also ensure that any missing parts or equipment is taken into account so the required actions can be carried out as soon as possible.	0	1
				1	0	5						
10	Equipment falls out of vehicle while under way to launch site	Equipment not properly secured to truck bed	Unable to participate in competition	Equipment will be restrained with ratchet straps or placed in secured container, so these security measures will have to fail for anything to fall out	Equipment falling out of the vehicle does not pose a direct hazard to the health and safety of any team members.	Any equipment that falls out of the vehicle will likely be damaged beyond repair and could damage other vehicles on the road	0	5	Acceptable without review	Any and all equipments stored will be strapped firmly to the transportation vehicle and checked for any loose ends by "tugging". Any and all loose ends will be secured before transportation as well as a trained team member will be in close contact with the equipment ensuring no failures during transportation occurs.	0	1
				1	1	5						

#	Hazard	Cause(s)	Effect(s)	Probability of Occurrence (1-5) & Rationale	Personnel Severity (0-5) & Rationale	Equipment Severity (1-5) & Rationale	Personnel Risk Index (Probability * Severity)	Equipment Risk Index (Probability * Severity)	Acceptable?	Mitigation Plan	Personnel Severity (0-5) With Mitigation Plan	Equipment Severity (1-5) With Mitigation Plan
11	Theft of equipment	Equipment not properly secured and locked in truck bed and rocket trunk	Unable to participate in competition due to lack of necessary equipment	Equipment and the vehicle will be secured against theft; vehicles will only stop at predetermined safe rest locations	Equipment theft does not pose a direct hazard to the health and safety of any team members.	Necessary equipment will be missing, which will prevent participation in the competition unless it is replaced	1	5	Acceptable without review	All of the equipment whether expensive or cheap will be stored securely under trunks with locks on them which will be known only to the team members. All team members will be advised to put away any used or unused equipment safely in the storage devices. And finally, the containers will be covered and kept an eye on constantly to make sure no theft or any such unfortunate events occur.	1	3
				5	4	1						
12	Dehydration while team searches for rocket after launch or while assembling the rocket	Not bringing sufficient quantity of water, extended exposure to extreme heat	Discomfort of team members	Extreme desert temperatures mean dehydration is likely, though sun safety measures and adequate hydration will act as safeguards (see Mitigation plan)	Dehydration can cause long-term health problems for any team members if it left untreated and prevent them from participating in the competition	Dehydration does not pose a direct hazard to any equipment however, the team members efficiency maybe reduced and misuse of equipment can occur.	20	3	Unacceptable: Needs to be mitigated compulsorily	Team members will bring hats, sunglasses and sunscreen. They will also assemble two pop-up canopies at the launch site to provide shade and bring two 10-gallon coolers filled with bottled water to ensure hydration	2	1
				5	5	1						
13	Heat stroke while team searches for rocket after launch	Not bringing sufficient quantity of water, extended exposure to extreme heat	Possible illness or death of team members	Extreme desert temperatures make heat stroke likely, though less likely than dehydration; sun safety measures and adequate hydration will act as safeguards (see Mitigation plan)	Heat stroke severely injure any team members if left untreated, and will prevent them from participating in the competition	Heat strokes do not pose a direct hazard to any equipment however, the team members efficiency maybe reduced and misuse of equipment can occur.	25	2	Unacceptable: Needs to be mitigated compulsorily	Team members will bring hats, sunglasses and sunscreen. They will also assemble two pop-up canopies at the launch site to provide shade and bring two 10-gallon coolers filled with bottled water to ensure hydration	3	1

HAZARD INDEXING MATRIX	
	PROBABILITY OF OCCURENCE

#	Hazard	Cause(s)	Effect(s)	Probability of Occurrence (1-5) & Rationale	Personnel Severity (0-5) & Rationale	Equipment Severity (1-5) & Rationale	Personnel Risk Index (Probability * Severity)	Equipment Risk Index (Probability * Severity)	Acceptable?	Mitigation Plan	Personnel Severity (0-5) With Mitigation Plan	Equipment Severity (1-5) With Mitigation Plan
				1	2	3	4	5				
			1	1	2	3	4	5				
			2	2	4	6	8	10				
			3	3	6	9	12	15				
			4	4	8	12	16	20				
		SEVERITY	5	5	10	15	20	25				

KEY:	
19-25	Unacceptable: Needs to be mitigated compulsorily
14-18	Undesirable: Written and reviewed decision required to proceed
6-13	Acceptable upon completion of quality assurance review
1-5	Acceptable without review

ID	Phase	Risk	Causes	Probability	Consequences	Severity	Mitigation
1	Pre Competition	Failure to complete tasks due to time conflicts with other tasks relating to university & works etc.	Lack of communication between team-leads and between general members and team leads. The task might also be too ambitions	4	5	20	Communicate with everyone and take in consideration the available time of each member of the team; clearly split the tasks and assign the hard deadlines; constantly verify that the task is being performed; try to find additional skillful people to help if needed; asses the difficulty of the task and consider spending time on finding an easier solution.
2	Pre Competition	Mistakes on subsystem level due to miscommunication	Inadequate leadership of the team-leader. Sub-team members are either divided by a geographical or language barrier.	4	4	16	During the weekly lead-meetings discuss and verify the work on subsystems; have one responsible person for each issue. Peer review as much as possible. Insure that most of the team members speak english and are located on the university grounds most of the week.
3	Assembling	Loose wires prevent smooth assembly	Many wires have to be connected internally and space is limited	4	4	16	Wires can get tangled with other parts -> proper assembly checklist needed; make additional incisions for easier removal and wiring; inspect wiring upon every usage, and before storing. Taylor design to avoid such problems. Use good quality connectors.
4	Pre Competition	Team split between tasks	Team members ambition to achieve the perfect rocket.	3	4	12	Prioritize the tasks; assign the team members to focus completely on the highest priority ones; terminate infeasible objective; discuss compromised objectives at team meetings.
5	Pre Competition	Mistakes at interface due to miscommunication	Inadequate leadership of the system engineering team.	3	4	12	Interface are under the responsibility of a single members of the system engineering team. Critical interfaces are discussed weekly with the team leaders.
6	Global	Team conflicts due to the organisation decisions	Chain of command not well established. Decisions were taken without considering all stakeholders. Lack of good leadership.	4	3	12	Clear structure; identify and communicate the priority tasks clearly; Tasks that concern competition rocket receive the highest priority; the team's primary focus is to make a successful rocket for the competition
7	Pre Competition	Lack of money to complete the objectives	Too little effort put into publicizing the project or too little interest on the industry's side in our activities	2	5	10	Concentrate more efforts in sponsoring and PR by establishing a strong sponsoring team with reliable members. Profit from EVE's help in this domain.
8	Pre Competition	Person injuries during fabrication, launch, testing	Lack of adequate procedures and non-compliance with local legislations or safety regulations.	2	5	10	Ensure compliance with safety regulations, keeping safe distance, having checklist to prevent improper handling.
9	Pre Competition	Unexpected environmental conditions affect simulation results	Wind, temperature or atmospheric pressure exceed the range of expected values in the simulations	3	3	9	Determine the apogee for large range of values; Experiment with different trim weights to compensate. Determine range of atmospheric values that insure apogee can be reached with adequate control.
10	Pre Competition	Exceeding the mass margin for the selected engine	Another engine has to be used than the one initially selected.	3	3	9	Weighing each component to precisely determine its mass; Take a system and subsystems level margins to account for uncertainty, Have a plan where a mass could be decreased if necessary
11	Launch	Instability due to asymmetric mass distribution	Inner systems were designed asymmetrically to accommodate heavy/bulky elements (eg. Batteries).	3	3	9	Design such that the weight distribution is as symmetrical as possible. Design an interchangeable fin system so the stability margin can be tailored late in the rocket construction. Check stability through simulation.
12	Pre Competition	People having unexpected projects	Personal lack of time or lack of interest.	2	4	8	Clearly identify reliable members based on their availabilities, demonstration of personal investment and initiative. Exclude unreliable people.
13	Pre Competition	Inadequate working force (in any SS)	Too little effort was invested into finding the adequate peoples. The objectives are too ambitious. Team member's experience is inadequate.	2	4	8	Clearly prioritize the tasks and make sure that mission critical ones have enough peoples working on them; Try to recruit additional working force for the remaining (second-order) tasks; identify the feasible objectives and terminate or relax them.
14	Pre Competition	Exceeding the budget contingencies taken on subsystem level	Unexpected system features in multiple systems were implemented after the budget were established. Some features were much more complex than	2	4	8	Designing the subsystems with allocated with allocated weight and power consumption in mind; Weighing nd verifying the weight for an many components as possible as well as maintaining rigorous budgets for mass, power and money.

ID	Phase	Risk	Causes	Probability	Consequences	Severity	Mitigation
15	Pre Competition	Minor damage on a test launch	Rocket behaves differently than expected (eg. Descent speed). Some functions didn't work properly (eg. Un-	4	2	8	Analyze and identify most probable things that can fail, plan the repairment accordingly. Fins and boattail are the most likely to fail, make them interchangeable.
16	Pre Competition	Stability: Bad CP from simulation	Error in rocket definition in commercial rocket simulation program (OR or RS).	1	5	5	Check by hand using Barrowman method.
17	Pre Competition	Stability: Bad CM from simulation	Error in rocket definition in commercial rocket simulation program (OR or RS) or because of incomplete CAD	1	5	5	If weight margins allow for it, plan locations for trim weights.

Operation Risks

ID	Phase	Risk	Causes	Probability	Consequences	Severity	Mitigation
1	Assembly	Not enough time	A part is broken shortly before the assembly period. Team members aren't coordinated. Stress induces errors.	4	5	20	Assembly checklists; assign duties for each for each team members to avoid confusion.
2	Recovery	Parachute entangles	The folding of the parachute wasn't done according to procedure. Shock cords and lines get tangles in the rocket.	4	5	20	Write standard folding procedure. Always have parachute folded by the same person. Put parachute in deployment bag.
3	Seperation	No separation	Cone is too tightly fitted to airframe. Ejection charge is not strong enough or pressure leaks through recovery bulkhead.	4	5	20	Several separation tests in different rocket positions, including shake test and test flight.
4	Seperation	No deployment of parachute	Parachute is struck in the rocket by protruding structural elements. It is tangled with it's own cord or other parts of the rocket.	4	5	20	Use an ejection ConOps which reduces the risk of entanglement to a minimum. Do ejection tests with payload.
5	Flight	Signal lost- Rocket untraceable	Rocket runs of power during flight, lands behind a terrain feature which obstructs the signal or crashes.	3	4	12	Design choice: use of redundant signals (900 MHz and 433 MHz), Also secondary system (Beacons). Implement easy integration of rocket attitude in simulator to predict landing location and have GPS data logging to have the latest registered position of the rocket.
6	Arming	Not enough battery power to launch after wait time on pad.	Weather is not optimal. Electrical issues with igniters. Another rocket has problems which delay the countdown.	2	5	10	Dedicate more mass budget to batteries in order to last for 3(+) hours. Implement standby or hibernation modes in sub-systems such that they drain less power before launch.

ID	Phase	Risk	Causes	Probability	Consequences	Severity	Mitigation
7	Flight	Unusable flight	The stability margin is smaller than expected. Elements detach in rocket (Bouncing).	2	4	8	Check CP/CM through different calculations + people
8	Recovery	Pre-deployment on the ground	Eyebolt and bulkhead damage. Damage to body tube.	2	4	8	Shunt charges until they're attached to recovery electronics. Do not move rocket with armed electronics.
9	Recovery	TD too tight to separate	Thermal Expansion, weather too warm	2	4	8	Have multiple redundancies for TD on site to mix and match different pins and bases.
10	Recovery	TD does not separate	Continuity issues, packed too tight to not allow air.	2	4	8	Use thinner gauge wires for connections to allow some air to go throught the base, Check for continuity when you insert the ingitors
11	Recovery	Ground test fails to eject recovery devices	Poor quality black powder, gases vent out from the holes too quickly, unburnt residue after test.	3	5	15	Ask local rocketeers/mentors/L3s to find you good quality black powder, pack the charges and ensure they don't dangle around the pouch, check for continuity before tests
12	Disassembly	Impossible due to jammed subsystems	Following a rocket crash, parts are deformed or temperature variations warp the parts such that they get stuck.	2	3	6	Bring adapted (incl destructive) tools for this case. Design such that assembly and disassembly are easy and not influenced by temperature variations.
13	Ground arrival	Damage on landing	Non nominal operation of parachute and recovery or underestimated parachute size.	3	2	6	Design choice of parachute size, also avoid to have fragile parts exposed.
14	Recovery	Main chute deploys at/near apogee	Shear pins, body tube or bulkhead failure. Chances of drifting more than expected.	3	2	6	Ensure integrity of parts and assembly before launch
15	Firing	Misfire	It happens....	3	1	3	Use two igniters from the beginning, (ask for) recycle.

Assembly, Preflight, Launch, Recovery, And Off-Nominal Checklists Appendix

Title:	
Aim:	To make sure all deliverables and necessity are made before and after flight.
Testing Team:	Sumit Harade, Girija Wale, Shriniwas Hase
Approved By:	Prashant Patil
Location:	Cape Canavial, Tatuí (SP), Brazil
Status:	

	Motor Assembly	
Step	**Action**	**Check**
1	Fill the liner with all the grains	
2	Grease the top and bottom grains	
3	Insert the liner into the case carefully	
4	Grease the oring for forward closure and insert it	
5	Grease the forward seal disk and add it to the top of the grain in the case	
6	Add the delay grain into the forward closure	
7	Insert the forward closure into the top of the case and tighten it firmly	
8	Apply grease to the oring for nozzle and insert it	
9	Insert the nozzle into the aft end of the case, ensure all orings get packed inside	
10	Tighten the aft closure and ensure all threads get engaged tightly	

Booster Section Assembly		
Step	**Action**	**Check**
1	Add the Coupler at the top of the booster tube, secure it using bolts.	
2	Inserts the centering ring inside the fuselage at given position and bolt it	
3	Inserts the thrust bulkhead at the top of the tube and bolt it.	
4	Add Aft bulkhead and mount aeropack retainer on it.	
5	Insert the casing gently and let it press fit through thrust bulkhead and screw the retainer cap	
6	Complete the fin assembly	
7	Add Boattail at the end of fuselage	
Upperairframe Section Assembly		
Step	**Action**	**Check**
1	Add the coupler at the bottom of the upperairframe and secure it using bolts.	
2	Ingress the payload with whole stack and retain it using centering rings.	
3	Insert the Avionics Stack at the desired location making sure it is properly aligned and secured	
4	Install recovery-coupling bulkhead at the top of the upper airframe	
Recovery Checklist		
Step	**Action**	**Check**
1	Use a multimeter to check continuity	
2	Prepare the recovery bulkhead, add eyebolts and terminal blocks to it.	
2	Prepare the ejection charge gloves, fill them with the required quantity of blackpoweder	
3	Add a small amount of butyl tape next to holes to give the bulkhead an airtight seal	
4	Fold the parachutes and put them in their deployment bags.	
5	Connect the parachutes with swivel links on one end and another end with quick links and TD.	
6	Install the parachute gently inside parachute bay	
7	Attached the recovery bulkhead to upperairframe using shear pins and complete the recovery assembly	
Nosecone Assembly Checklist		
Step	**Action**	**Check**
1	Add the nosetip and nosetip retainer	
2	Pass the M12 threaded rod throughout nosecone upto nosetip retainer	
3	Attached the M12 washer eyenut	
Rocket Assembly Checklist		

Step	Action	Check
1	Insert the recovery hardware and chutes inside the nosecone and close it up	
2	Connect 4 M4 Nylon bolts on nosecone sholder	
3	Connect the booster and upper airframe with the aluminium coupler	
On Pad Checklist		
Step	**Action**	**Check**
1	Creafully slide the rocket onto the launch rail	
2	Raise the rocket to the desired launch angle	
3	Arm the altimeters and GPS by turning ON the arming switch	
4	Arm payload with the wifi switch using any mobile device	
5	Clear the pad of all non-essential personnel	
6	Get permission from the range manager to install ignitors	
7	Strip the leads of the igniters and attach them to the launch control leads	
8	Leave launchpad and maintain a safe distance	
Rocket Recovery Checklist		
Step	**Action**	**Check**
1	Use data from featherweight GPS and RocketPy Dispersion analysis to find the rocket at the desert	
2	Click close up pictures of rocket at landing site	
3	Turn off all the electronics through their switches	
4	Cut all wires connected to pyrotechnic recovery devices	
5	Disconnect the parachutes and pack them up	
6	Have 3 people to pick the rocket up and head towards paddock for post flight analysis	
Post flight Checklist		
Step	**Action**	**Check**
1	Remove the motor from the aft section and verify if there's any unburnt fuel inside case	
2	Dispose any unused energetics safely	
3	Remove electronics from upper airframe and disconnect the batteries	
4	Send the altimeters to Operations to log flight data	
5	Inspect all components and have ample pictures	
Pad Abort Checklist		
Step	**Action**	**Check**

1	Confirm Launch abort	
2	Check launching system connection with the ignitor	
3	Disable current flow through the circut breaker	
4	Final status check	
5	Wait for green flag	
6	Begin personnel approach	
7	Remove the ignitor of the combustion chamber	
8	Turn off all recovery electronics	

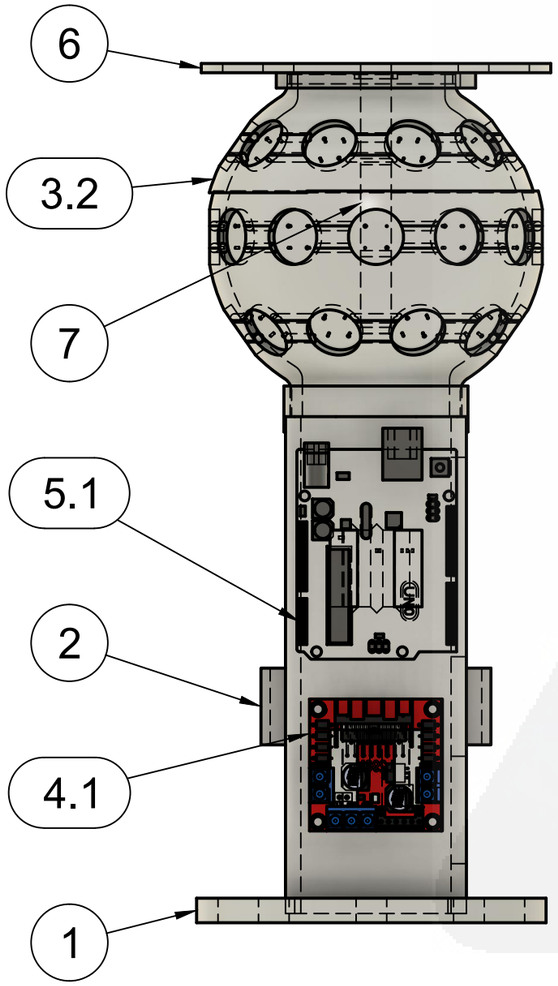

Parts List				
Item	Qty	Part Number	Part Name	Material
1	1	PL - Electronics Base	PL - Electronics Base v7	ABS Plastic
2	1	PL - Electronics Sled	PL - Electronics Sled v8	ABS Plastic
3	1	PL - Printable Bottom	PL - Printable Bottom v18	
3.2	1	Component2	Component2	ABS Plastic
4	1	PL - Driver Plate	PL - Driver Plate v16	
4.1	1	PL - Transducer Driver	PL - Transducer Driver v1	Steel
5	1	PL - Arduino Plate	PL - Arduino Plate v6	
5.1	1	ARDUINO UNO R3 Step	ARDUINO UNO R3 Step v1	Steel
6	1	PL - Top Cover	PL - Top Cover v3	ABS Plastic
7	1	PL - Sensor Platform	PL - Sensor Platform v1	ABS Plastic

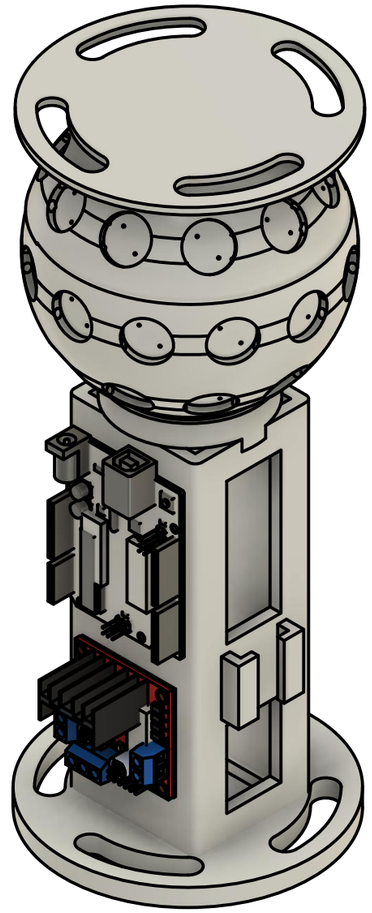

Department	Component	Material	Drawn By	Approved By
Payload	Payload Assembly	ABS+	Aasit Vora	Aasit Vora

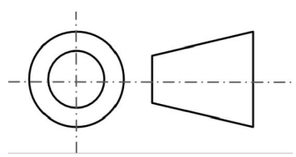

All Dimensions are in mm
Tolerances: ±0.02 mm

Drawing Scale

Sheet Size: A3

Team Logo

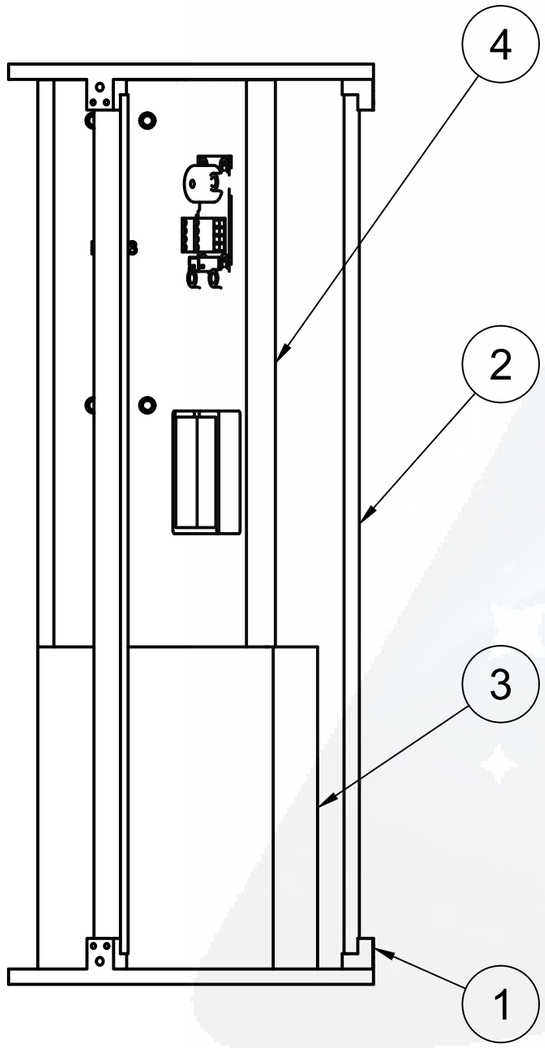

Parts List					
Item	Qty	Part Name	Description	Material	Mass
1	2	Avionics Stack Ring v6	To connect avionics slits	Aluminum	87.034 g
2	3	Avionics Slit v4	To join avionics stack ring	Aluminum	37.63 g
3	1	Battery compartment v4	To house the batteries	ABS Plastic	407.323 g
4	1	Avionics sled v9	To mount electronics boards	ABS Plastic	372.01 g

Department	Component	Material	Drawn By	Approved By
Avionics	Avionics Stack Assembly	Aluminum and ABS	Tanmay Kanmahale	Aasit Vora

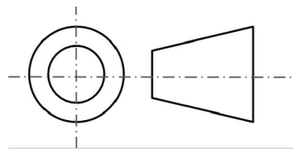

All Dimensions are in mm
Tolerances: ±0.02 mm

Drawing Scale
1:2

Sheet Size	A3	Team Logo	

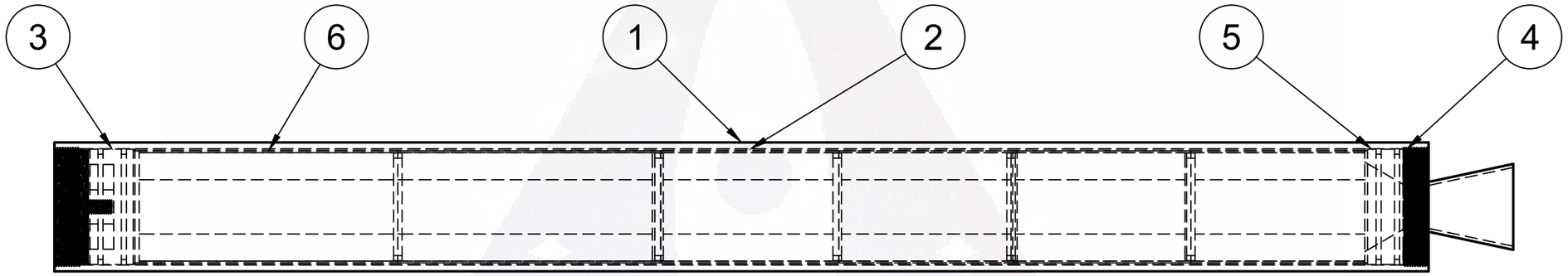

Parts List		
Item	Qty	Part Number
1	1	Casing
2	1	Liner
3	1	Forward Closure
4	2	Endcap
5	1	Optimized Nozzle
6	1	Grains assembly

Department	Component	Material	Drawn By	Approved By
Propulsion	L Class Motor		Tanmay	Prashant

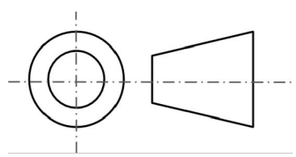

All Dimensions are in mm
Tolerances: ±0.02 mm

Drawing Scale
1:3

Sheet Size	A3	Team Logo	

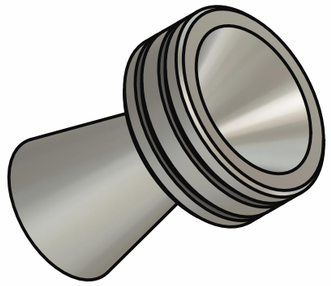

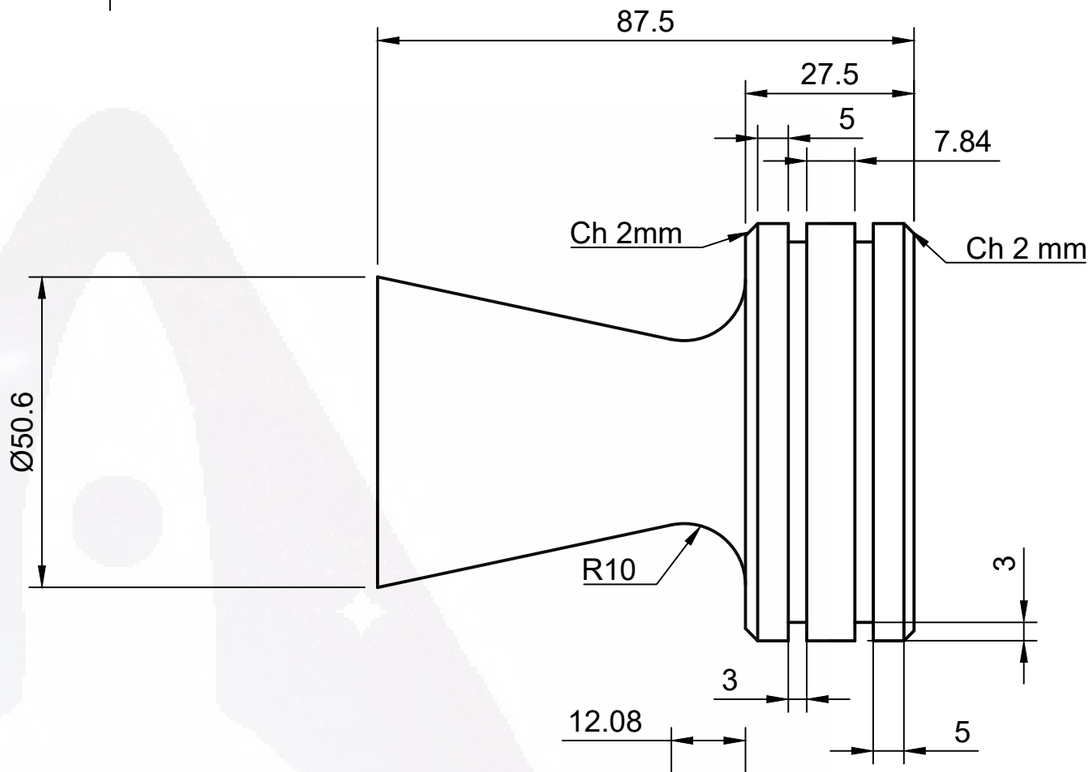

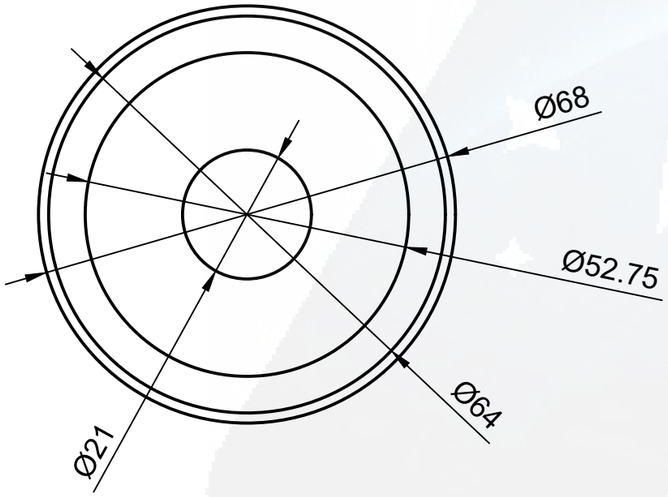

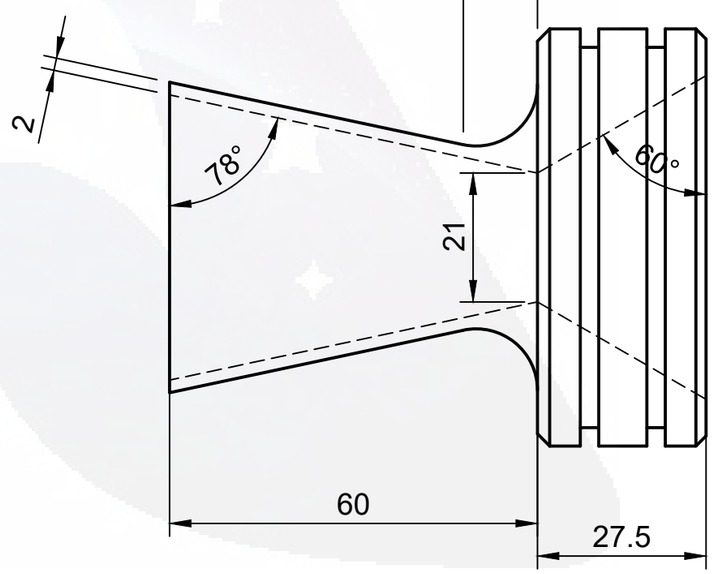

Department	Component	Material	Drawn By	Approved By
Propulsion	Nozzle	SS304	Tanmay	Prashant

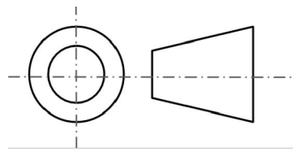

All Dimensions are in mm
Tolerances: ±0.02 mm

Drawing Scale
1:1

Sheet Size	A3	Team Logo	

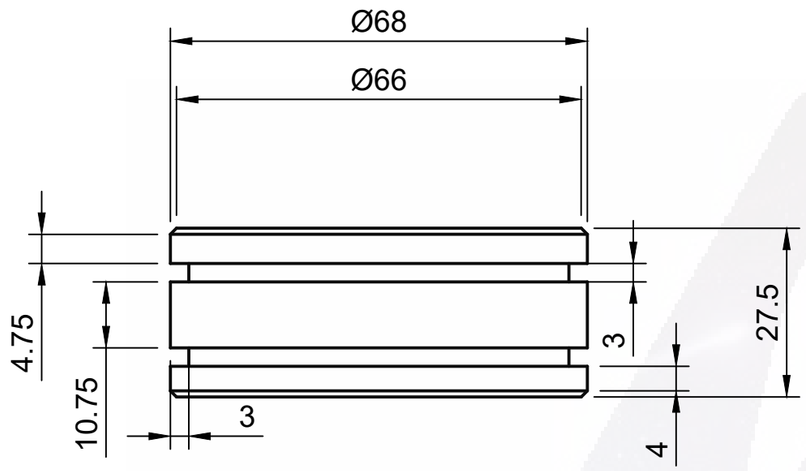

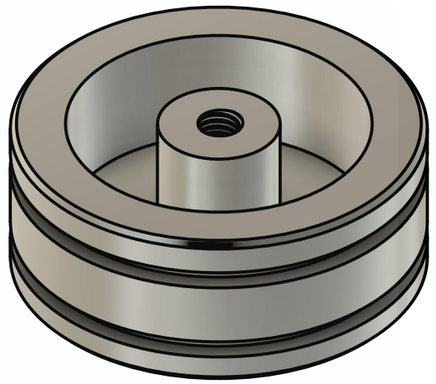

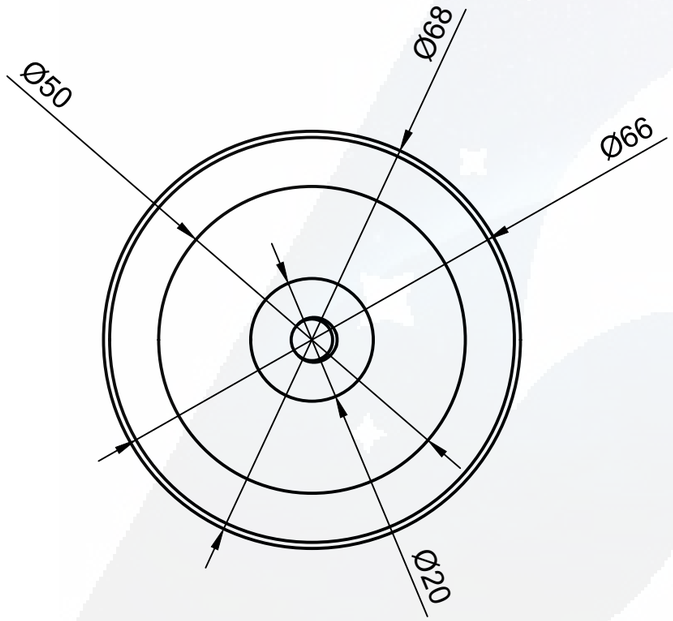

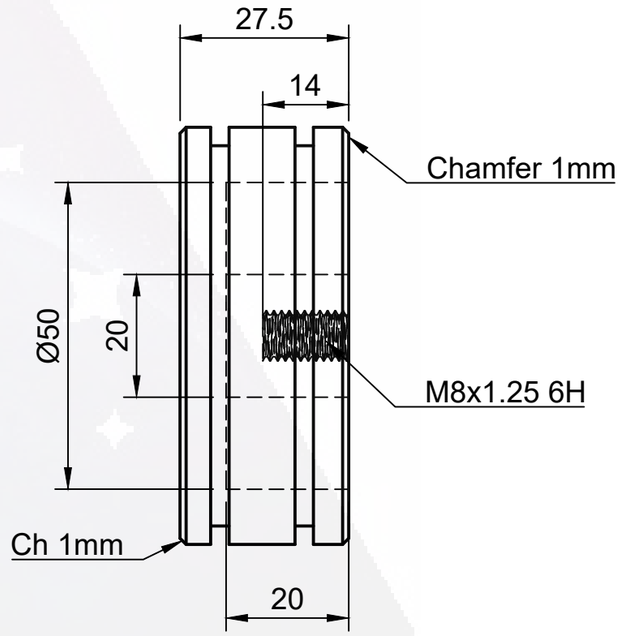

Department	Component	Material	Drawn By	Approved By
Propulsion	Forward Closour	SS304	Tanmay	Prashant

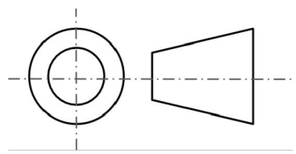

All Dimensions are in mm
Tolerances: ±0.02 mm

Drawing Scale: 1:1

Sheet Size: A3

Team Logo

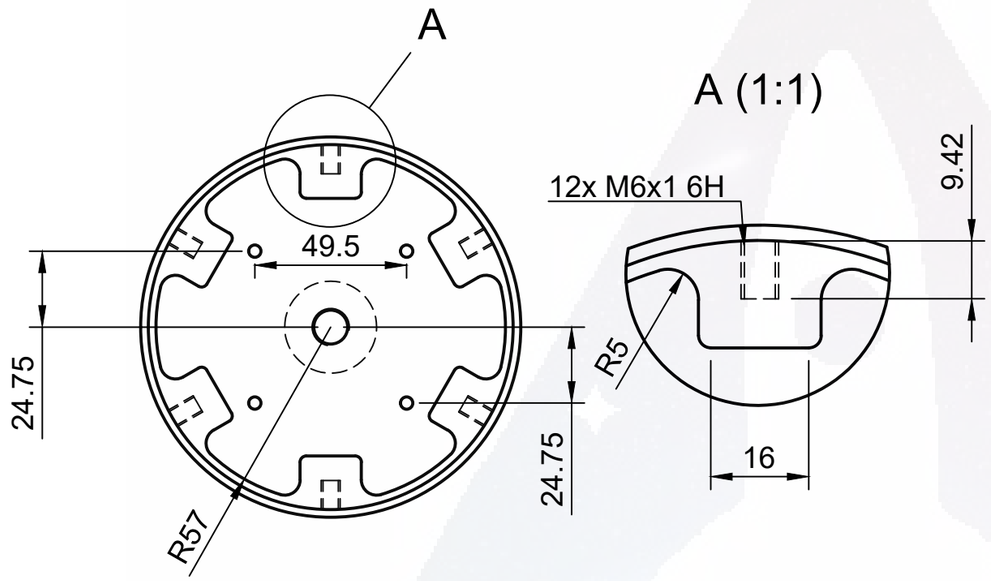

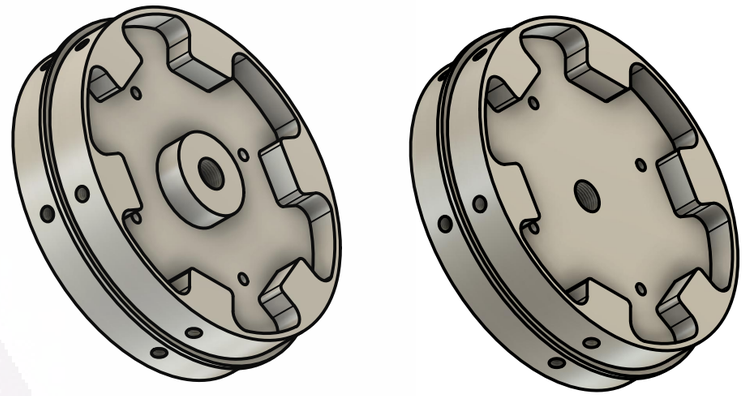

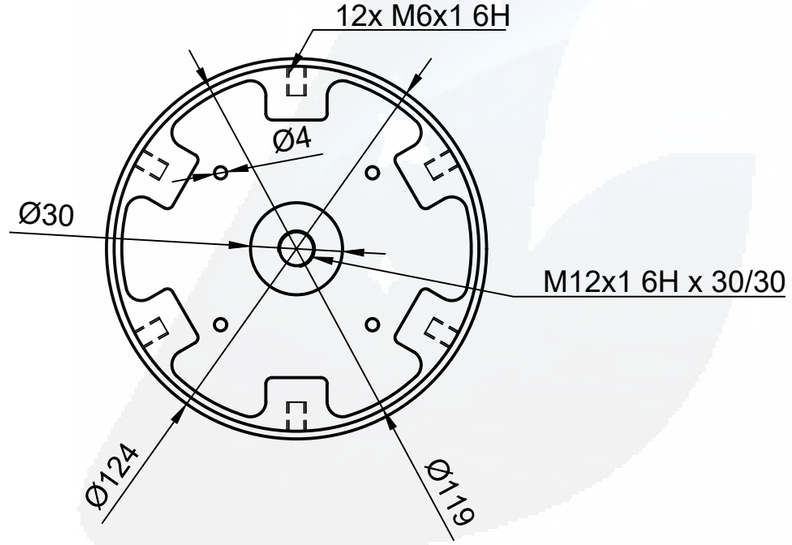

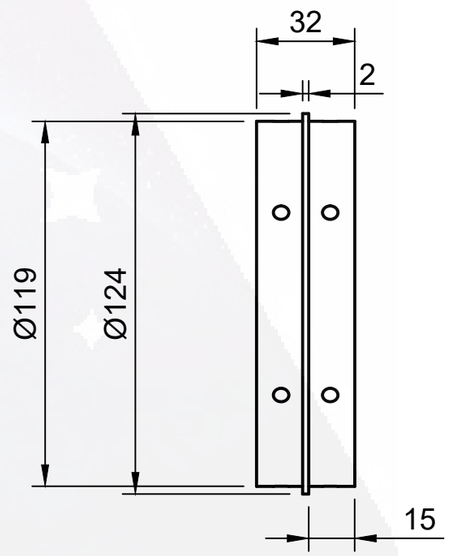

Department	Component	Material	Drawn By	Approved By
Recovery	Recovery Bulkhead	Aluminum 6061	Tanmay	Prashant

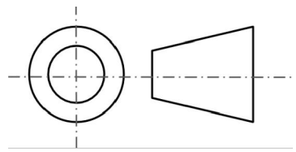

All Dimensions are in mm
Tolerances: ±0.02 mm

Drawing Scale: 1:2

Sheet Size: A3

Team Logo

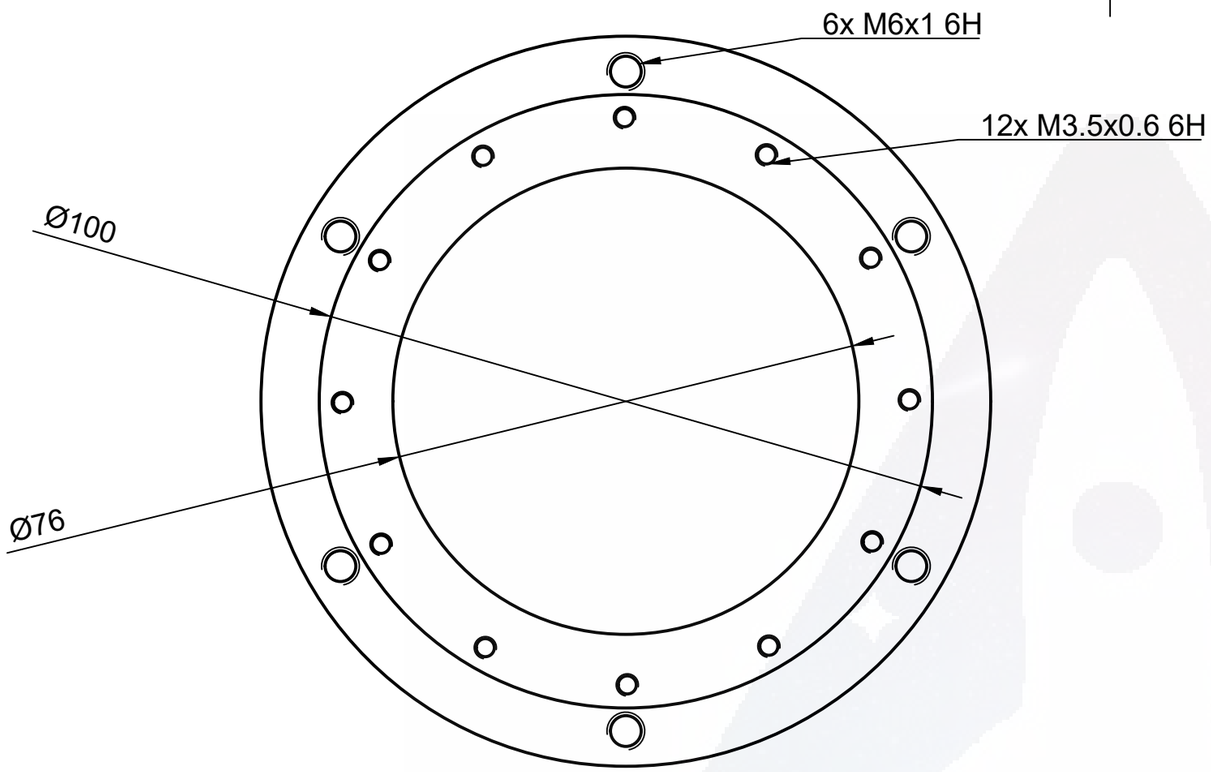

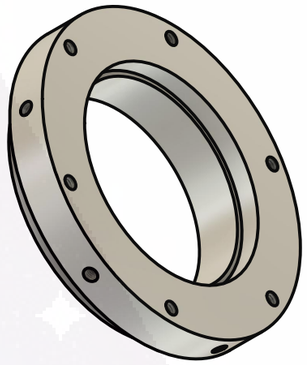

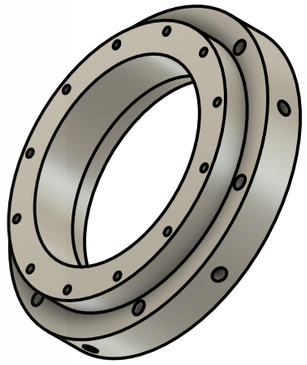

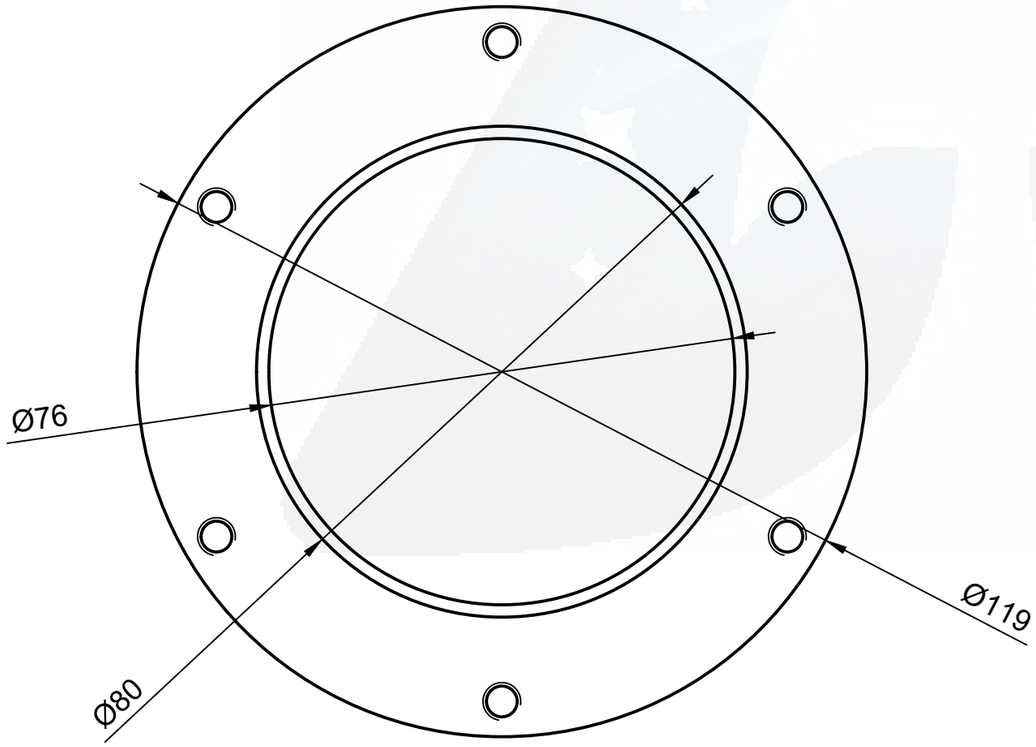

A-A (1:2)

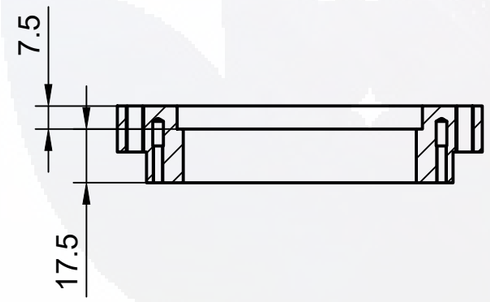

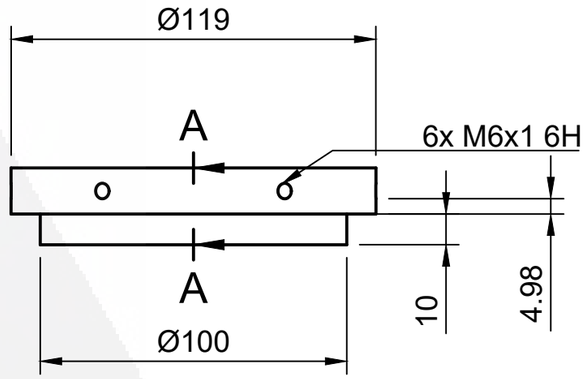

Department	Component	Material	Drawn By	Approved By
Aerostructure	Aft Bulkhead	Aluminum 6063	Tanmay	Prashant

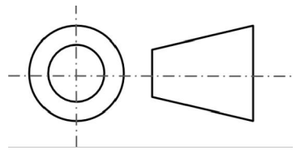

All Dimensions are in mm
Tolerances: ±0.02 mm

Drawing Scale

Sheet Size	A3	Team Logo	

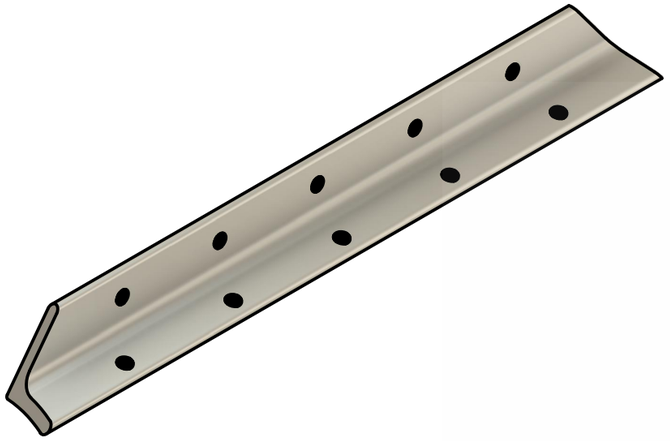

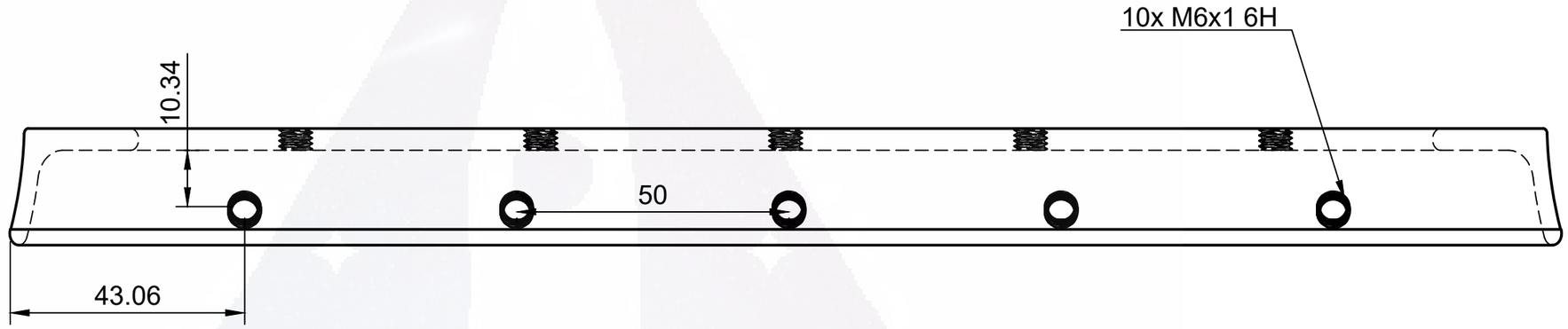

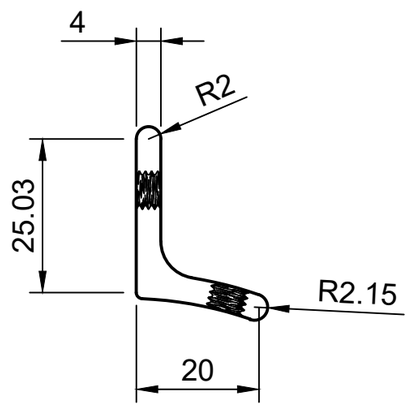

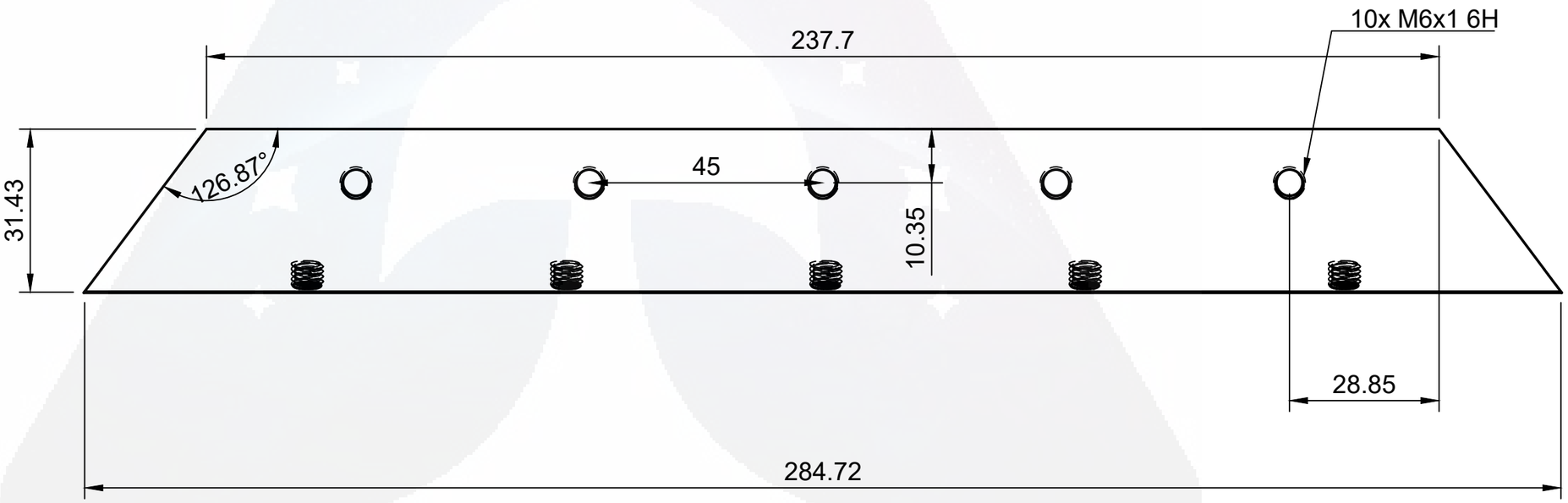

Department	Component	Material	Drawn By	Approved By
Aerostructure	Fin Brackets	Aluminum	Tanmay	Aasit

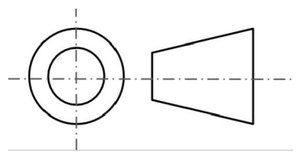

All Dimensions are in mm
Tolerances: ±0.02 mm

Drawing Scale
1:1

Sheet Size	A3	Team Logo	

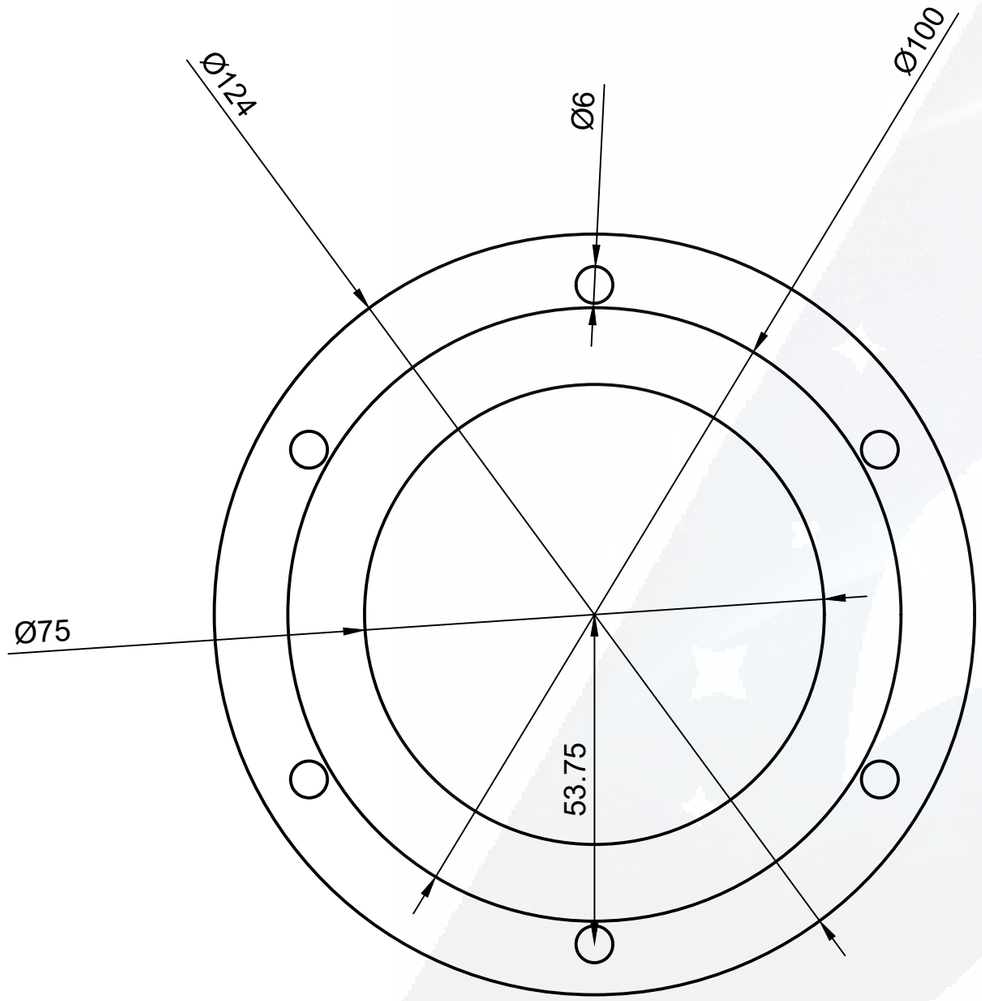

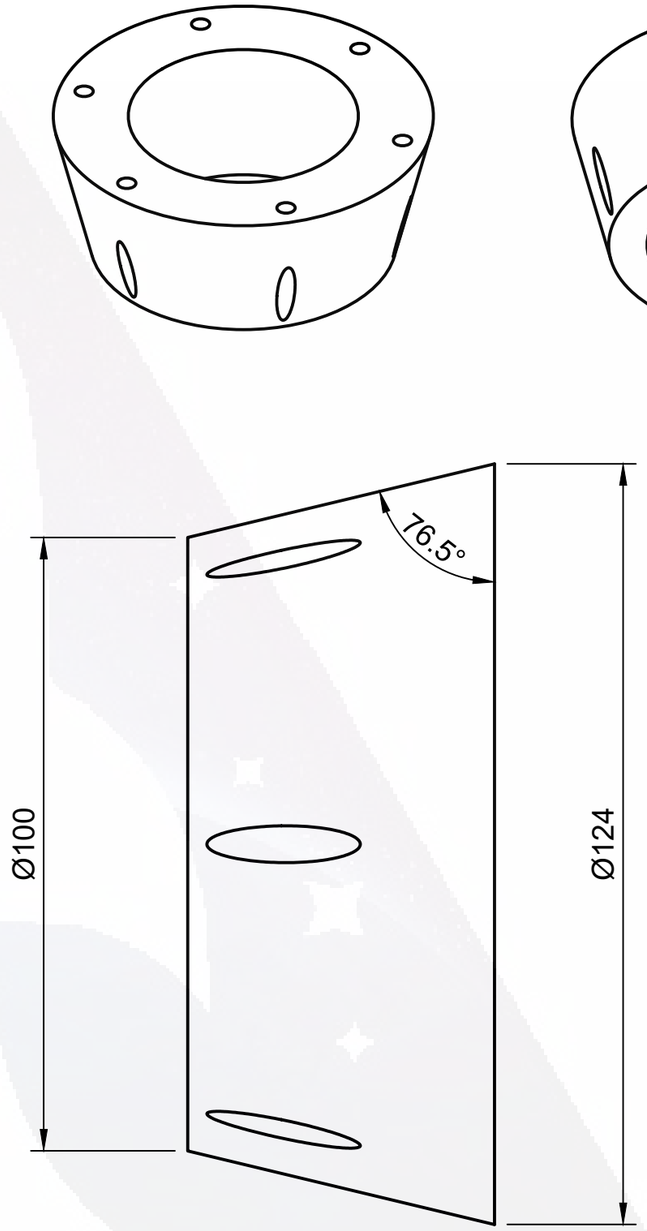

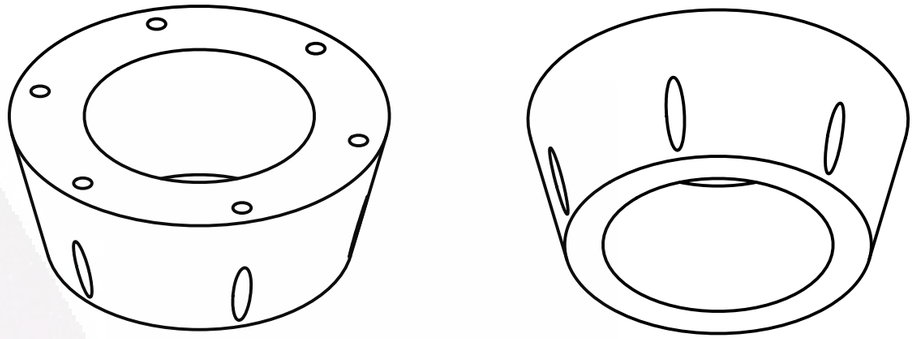

Department	Component	Material	Drawn By	Approved By
Aerostructure	Boat-Tail	ABS	Tanmay Kanmahale	Aasit Vora

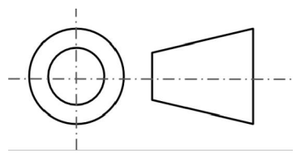

All Dimensions are in mm
Tolerances: ±0.02 mm

Drawing Scale
1:1

Sheet Size	A3	Team Logo	

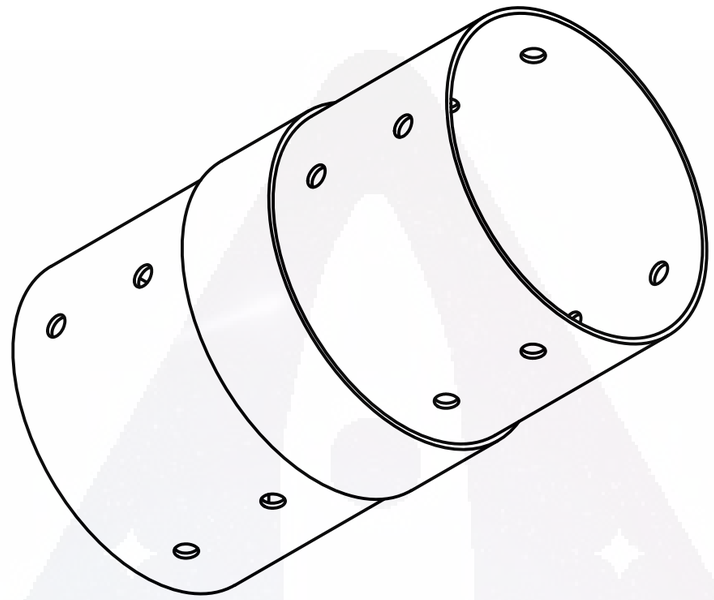

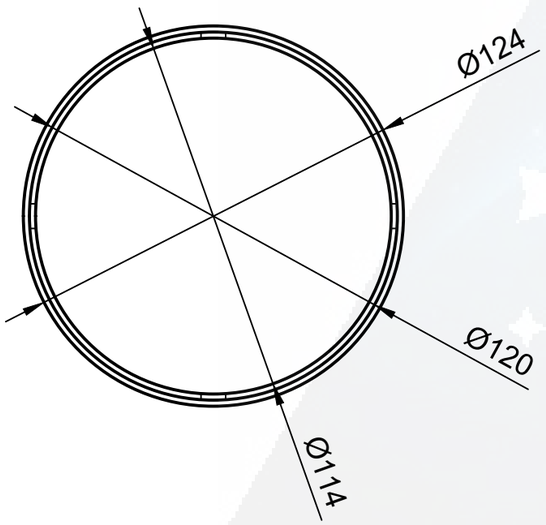

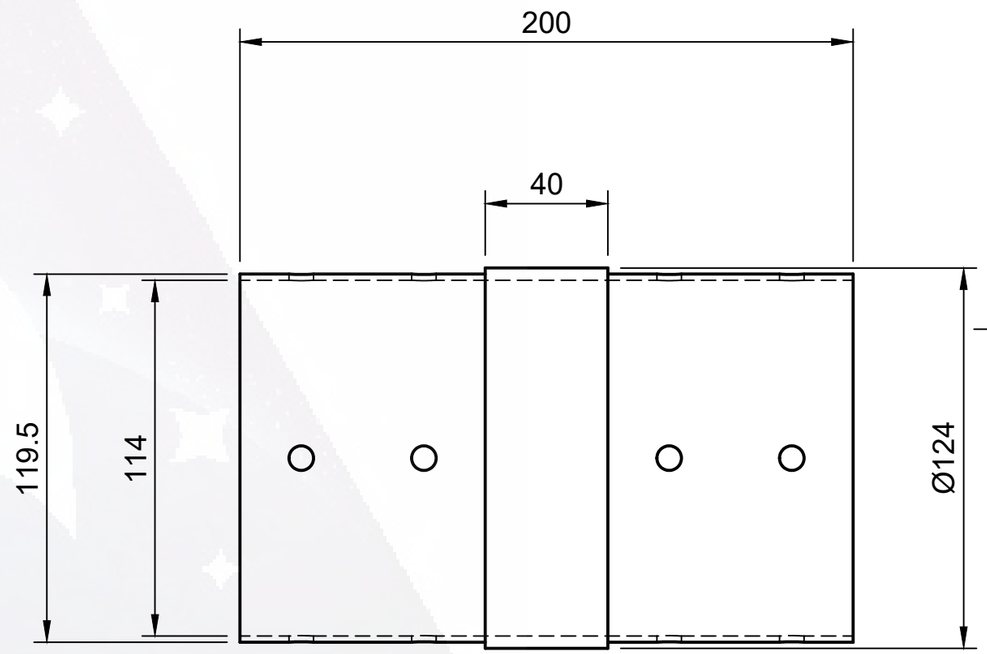

Department	Component	Material	Drawn By	Approved By
Aerostructure	Tube Coupler	Aluminum 6063	Tanmay Kanmahale	Aasit Vora

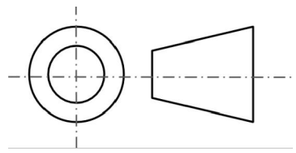

All Dimensions are in mm
Tolerances: ±0.02 mm

Drawing Scale
1:2

Sheet Size	A3	Team Logo	

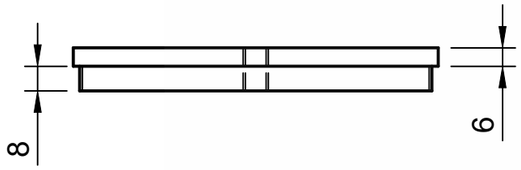

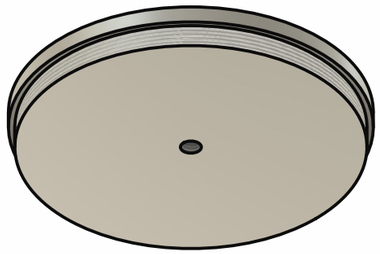

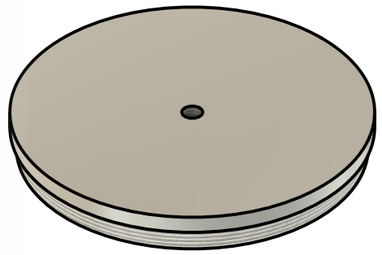

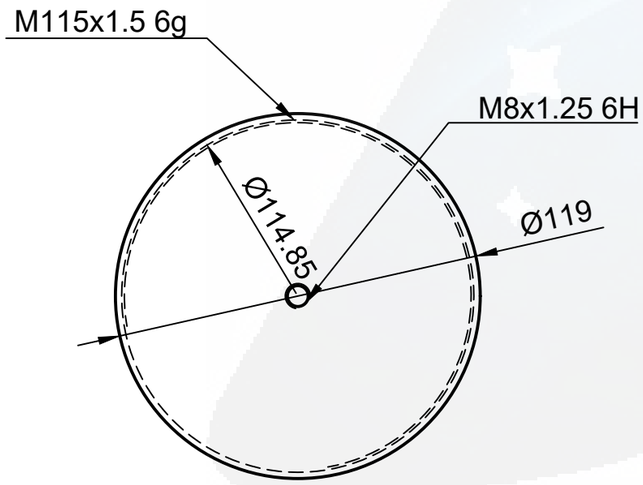

Department	Component	Material	Drawn By	Approved By
Payload	Payload Endcap	Aluminium	Aasit Vora	

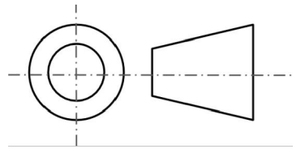

All Dimensions are in mm
Tolerances: ±0.02 mm

Drawing Scale

Sheet Size	A3	Team Logo	

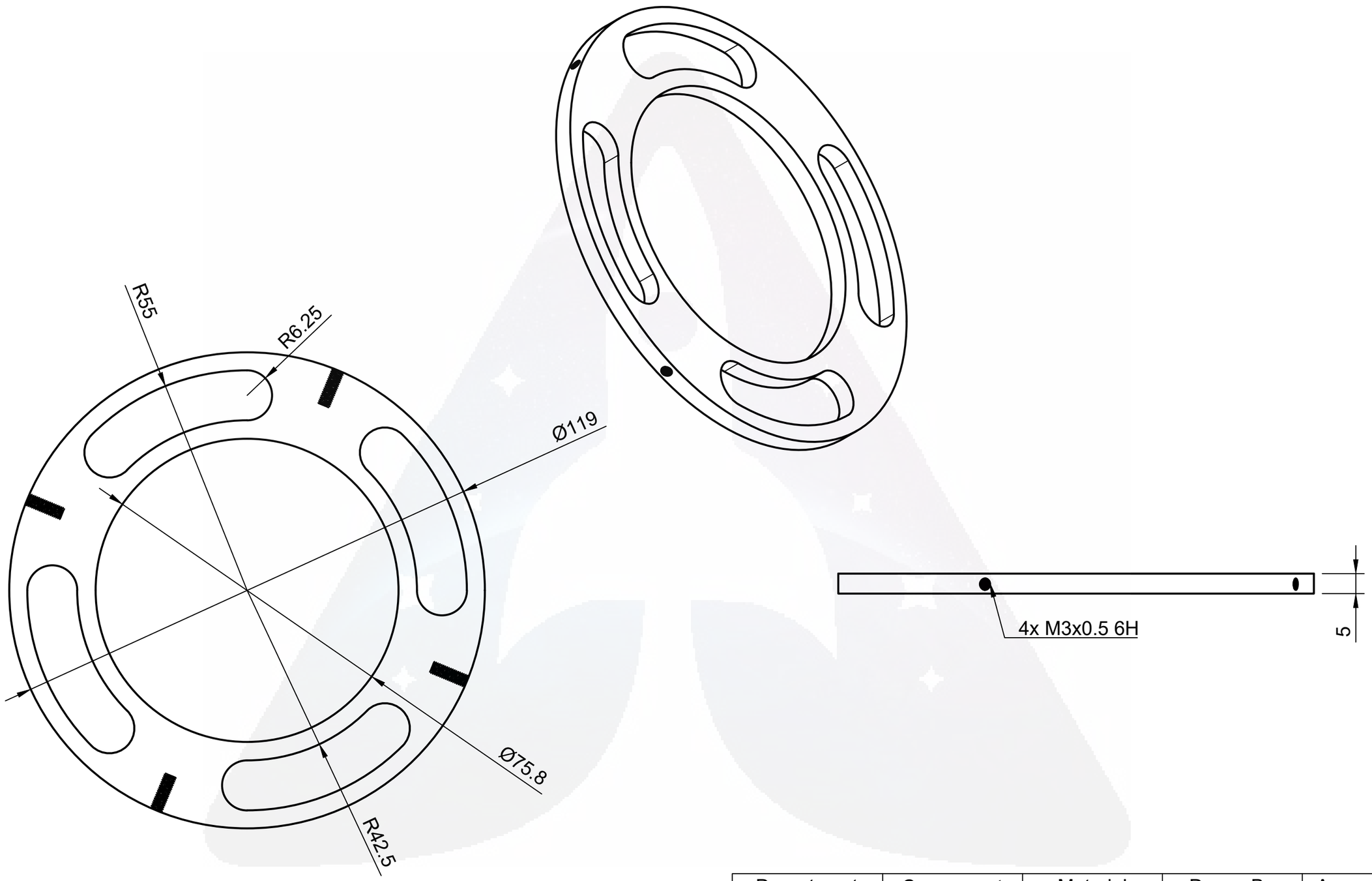

Department	Component	Material	Drawn By	Approved By
Propulsion	Centering Ring	Aluminum	Atharva Jadhav	Aasit Vora

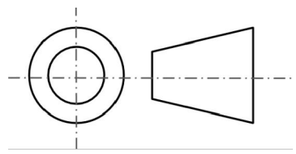

All Dimensions are in mm
Tolerances: ±0.02 mm

Drawing Scale
1:1

Sheet Size	A3	Team Logo	

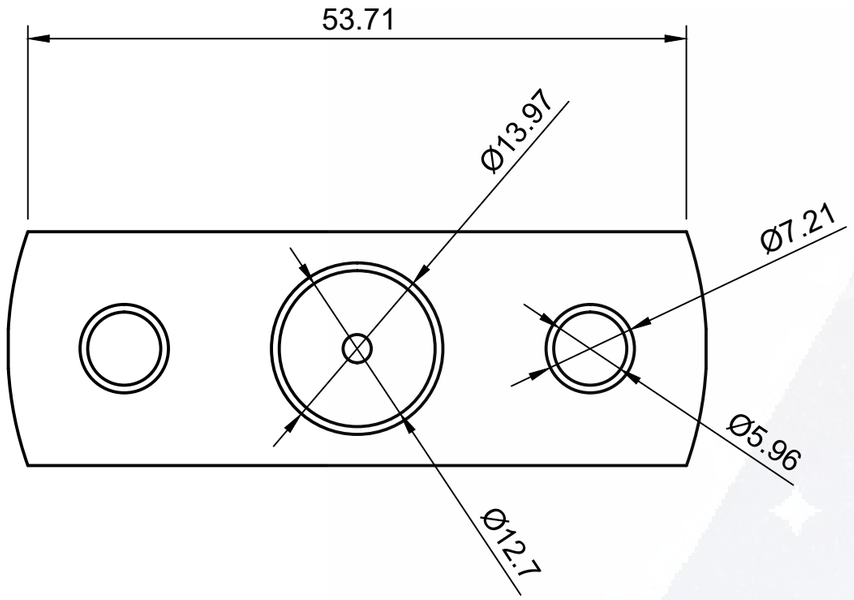

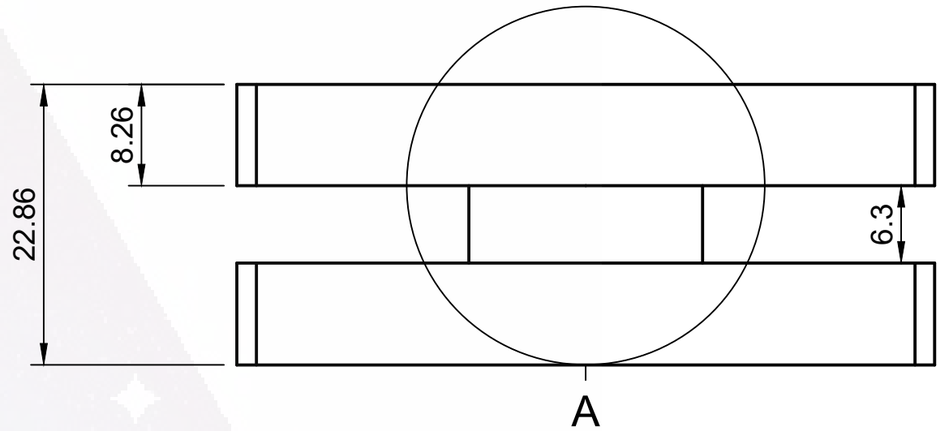

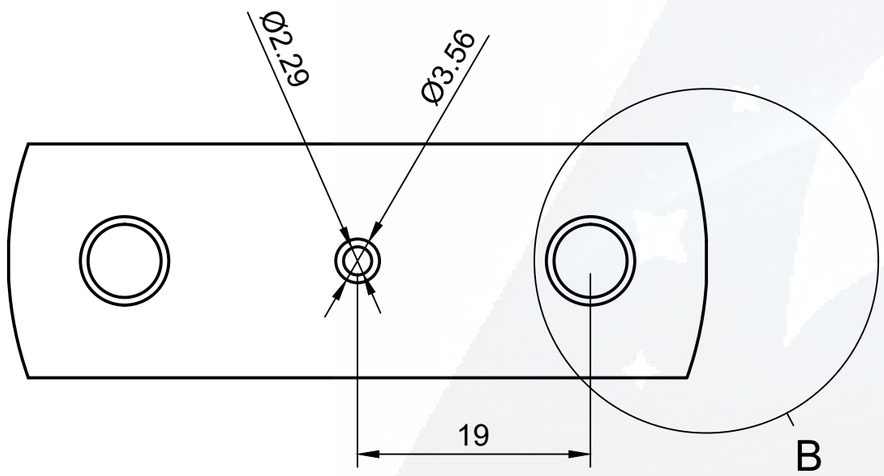

B (2)

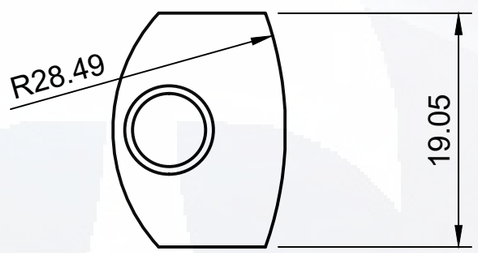

A (2)

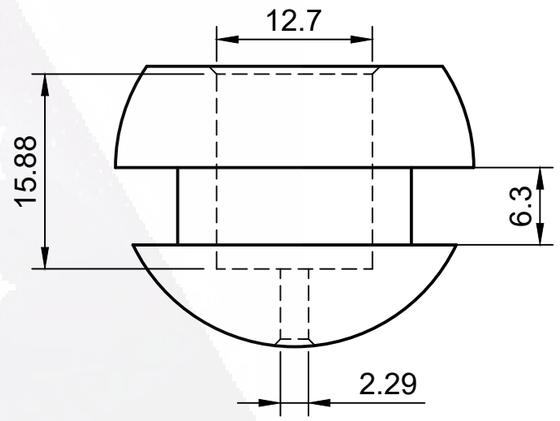

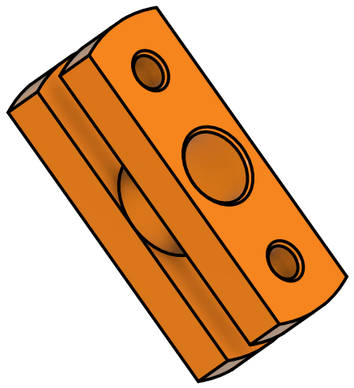

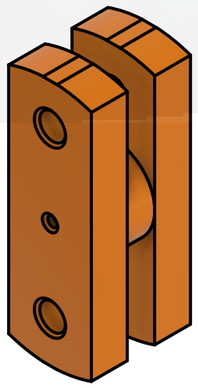

Department	Component	Material	Drawn By	Approved By
Recovery	Tender Descender Base	Aluminum 6061	Tanmay Kanmahale	Aasit Vora

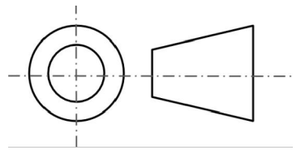

All Dimensions are in mm
Tolerances: ±0.02 mm

Drawing Scale
2:1

Sheet Size	A3	Team Logo	

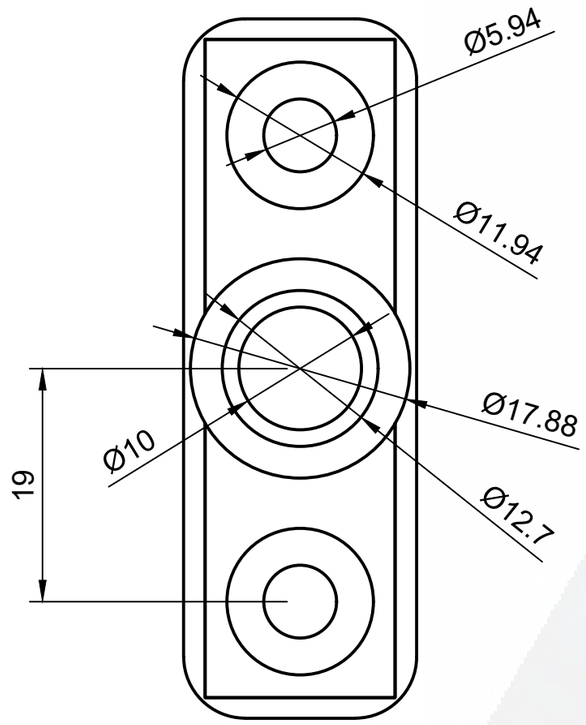

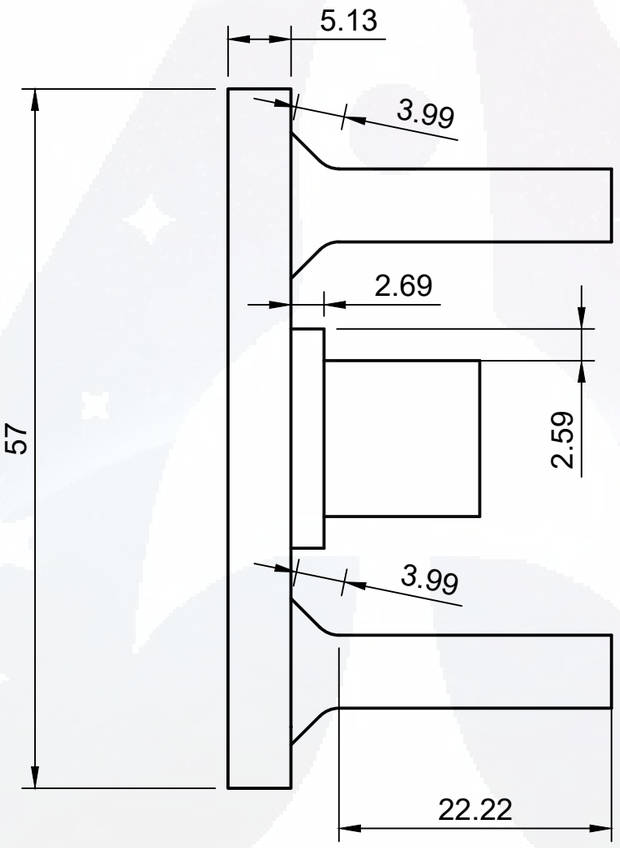

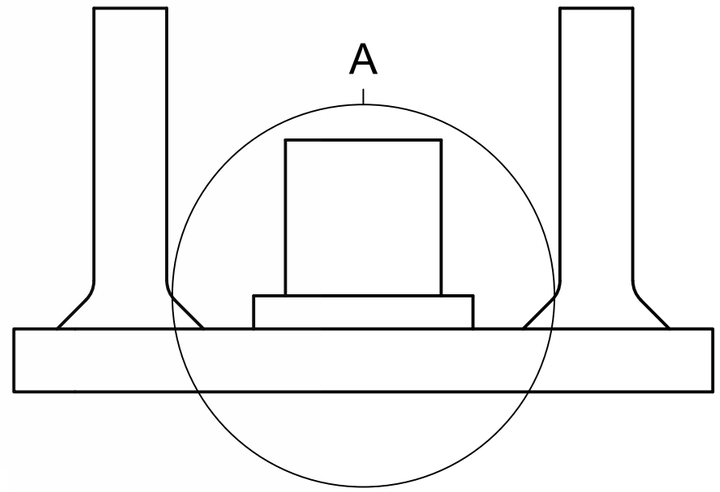

A (2)

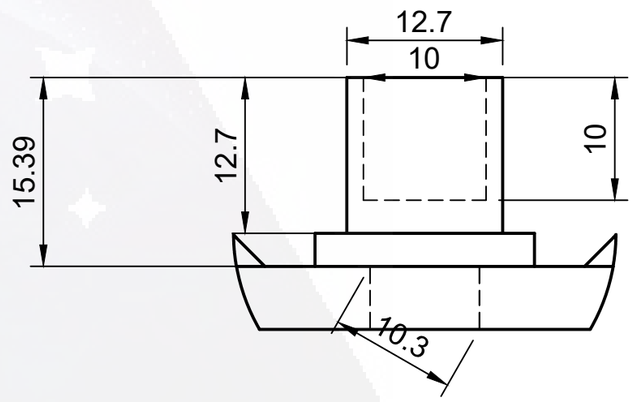

Department	Component	Material	Drawn By	Approved By
Recovery	Tender Descender Piston and Rod	Aluminum 6061	Prashant Patil	Aasit Vora

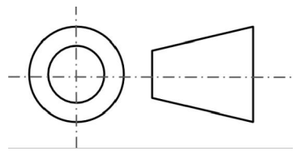

All Dimensions are in mm
Tolerances: ±0.02 mm

Drawing Scale
2:1

Sheet Size	A3	Team Logo	

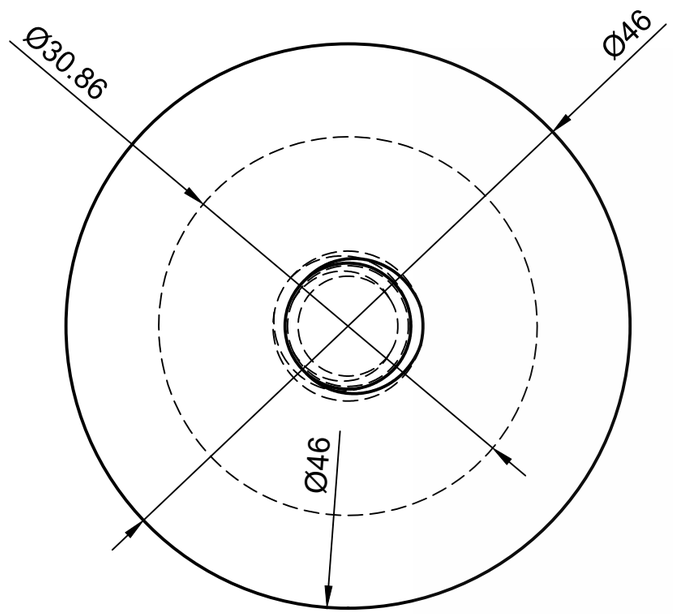

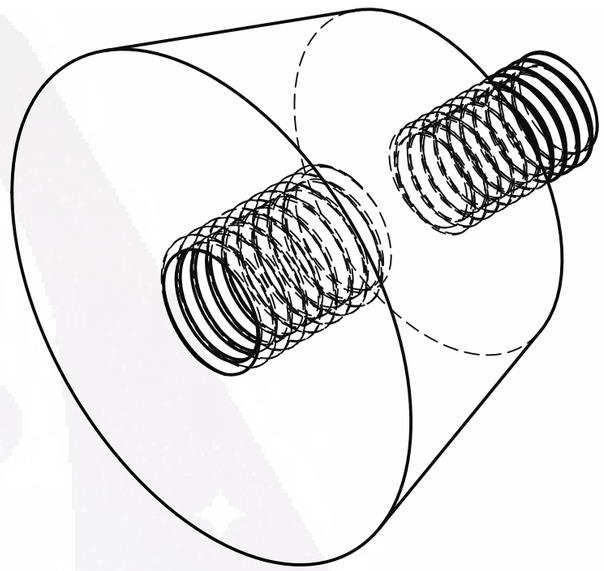

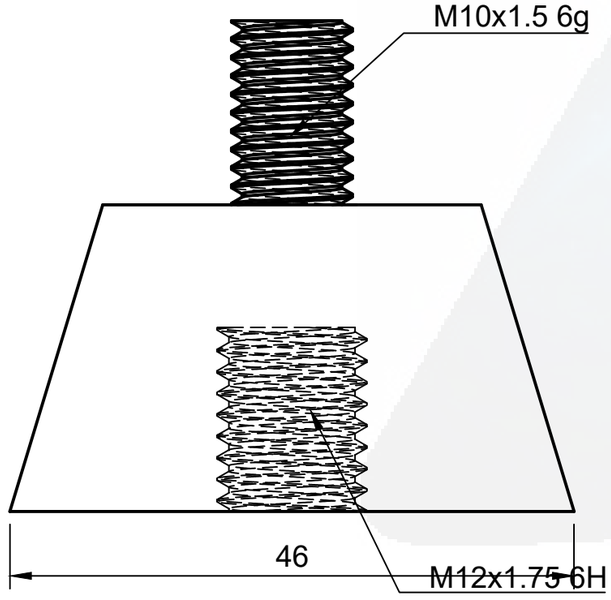

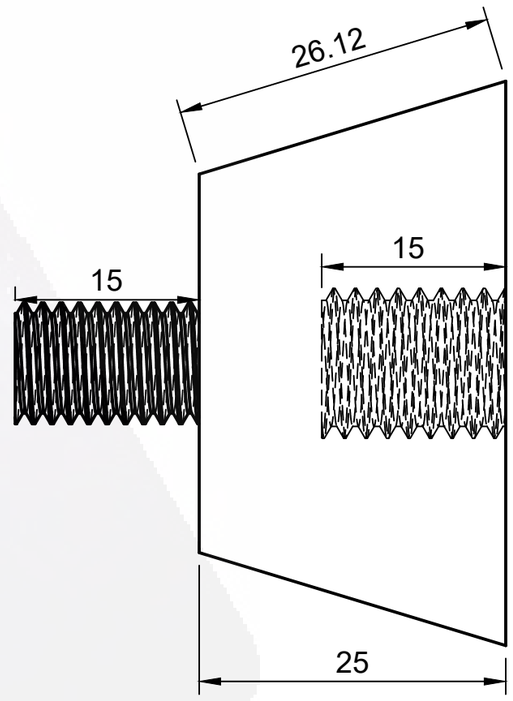

Department	Component	Material	Drawn By	Approved By
Aerostructures	Nose Tip Retainer	Aluminium	Aasit Vora	Aasit Vora

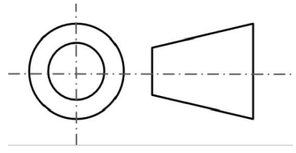

All Dimensions are in mm
Tolerances: ±0.02 mm

Drawing Scale

Sheet Size: A3

Team Logo

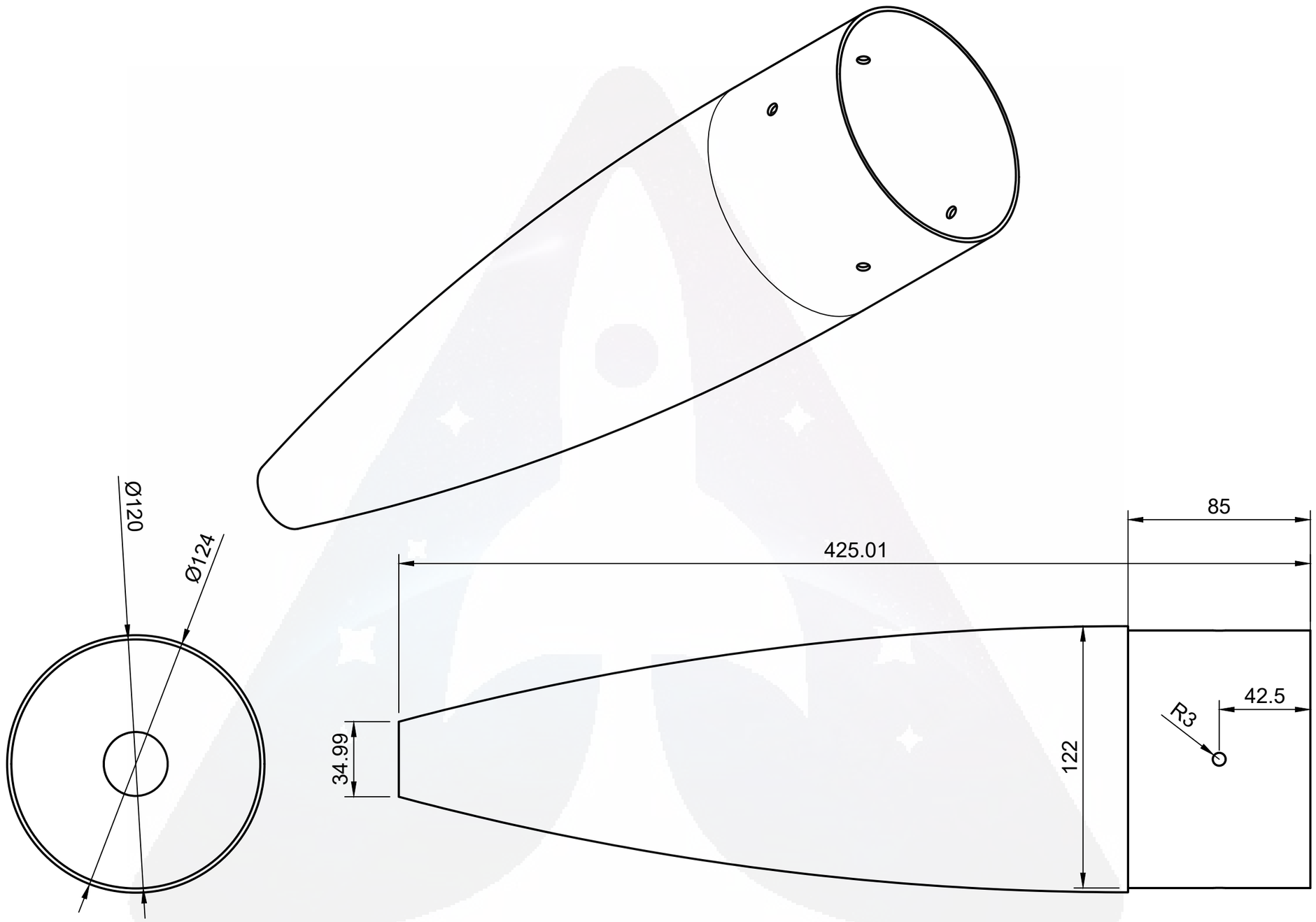

Department	Component	Material	Drawn By	Approved By
Aerostructure	Nosecone	Fiberglass	Tanmay Kanmahale	Aasit Vora

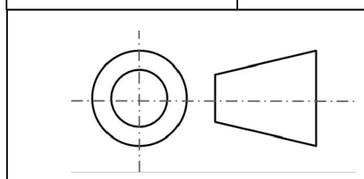

All Dimensions are in mm
Tolerances: ±0.02 mm

Drawing Scale: 1;2

Sheet Size: A3

Team Logo

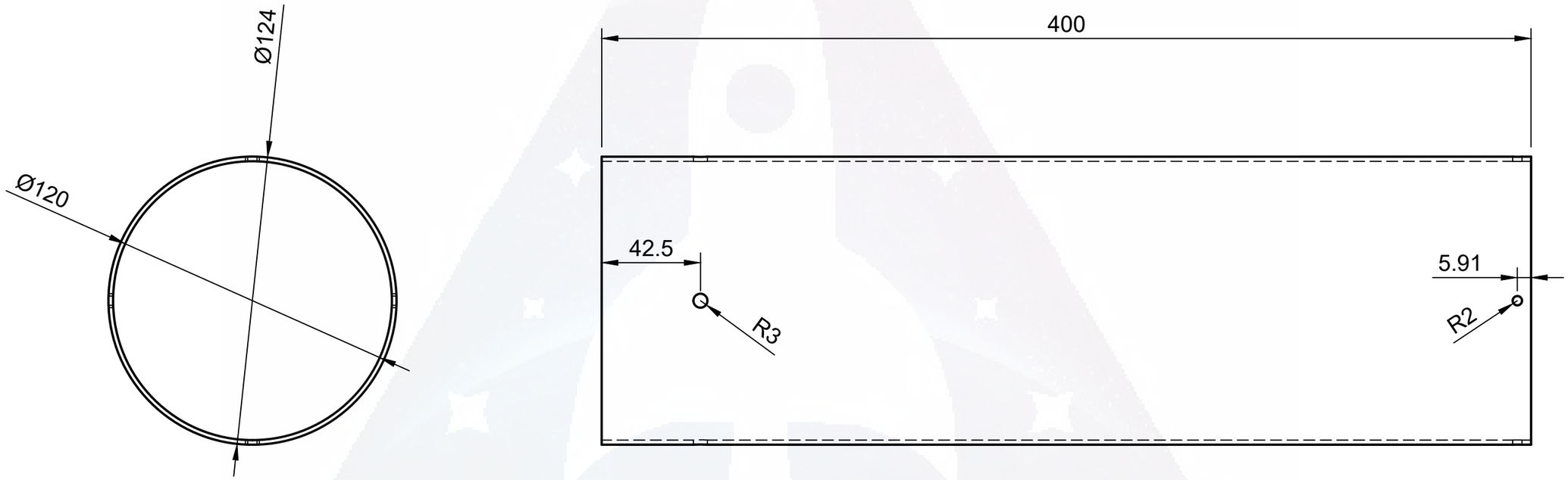

Department	Component	Material	Drawn By	Approved By
Aerostructure	Parachute Bay	Fiberglass	Tanmay Kanmahale	Aasit Vora

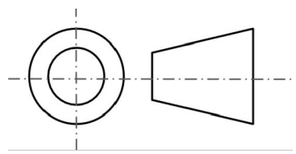

All Dimensions are in mm
Tolerances: ±0.02 mm

Drawing Scale
1:2

Sheet Size	A3	Team Logo	

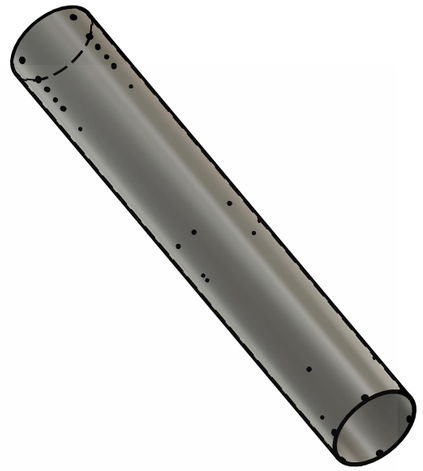

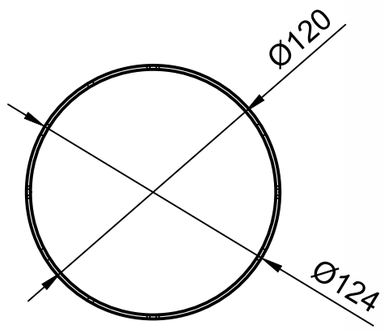

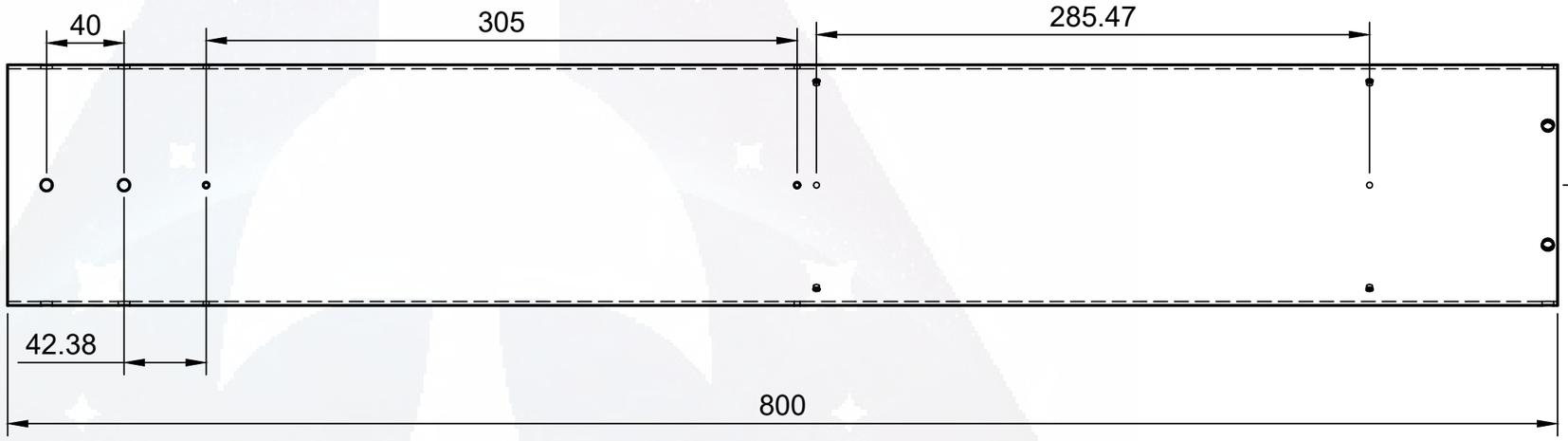

Department	Component	Material	Drawn By	Approved By
Aerostructures	Upper Airframe	Fibreglass	Atharva Pingale	Aasit Vora

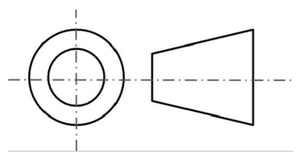

All Dimensions are in mm
Tolerances: ±0.02 mm

Drawing Scale

Sheet Size: A3

Team Logo

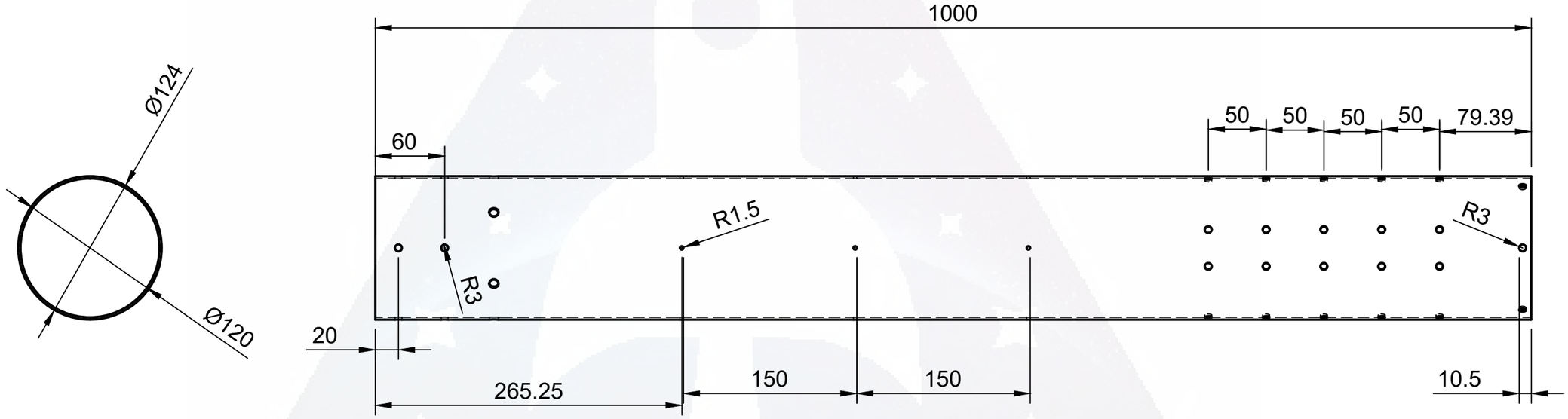

Department	Component	Material	Drawn By	Approved By
Aerostructure	Booster Tube	Fiberglass	Tanmay kanmahale	Aasit Vora

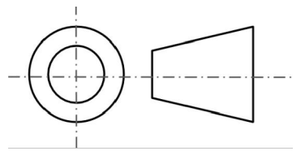

All Dimensions are in mm
Tolerances: ±0.02 mm

Drawing Scale
1:4

Sheet Size	A3	Team Logo	

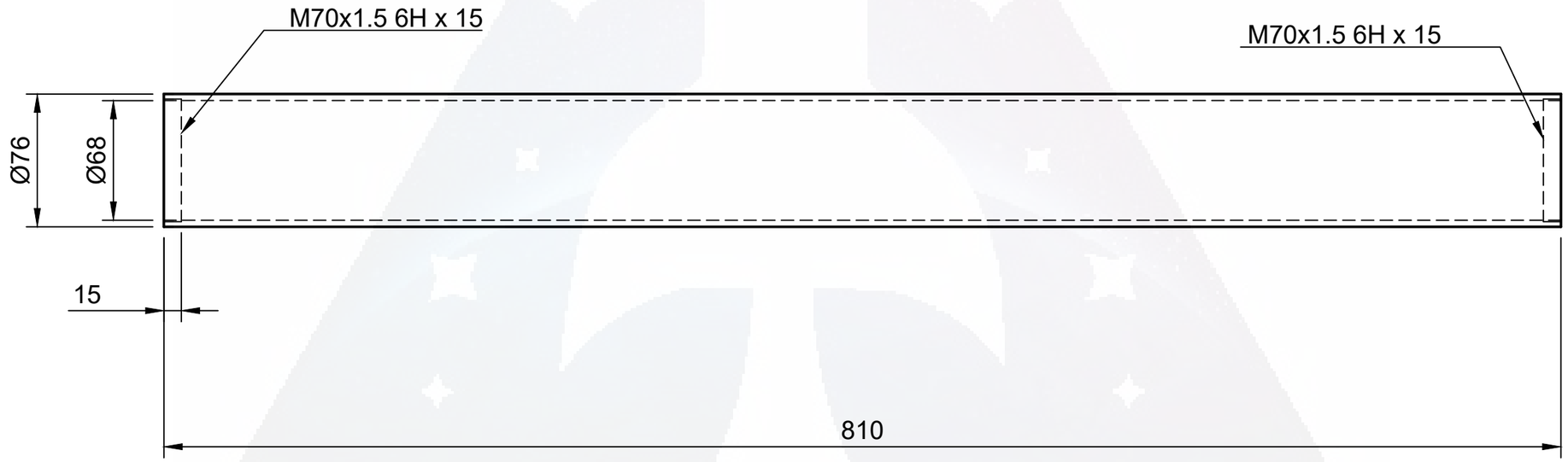

Raw Material Size: 850

Department	Component	Material	Drawn By	Approved By
Propulsion	Motor Case	Aluminum 6063	Tanmay	Prashant

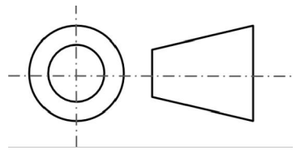

All Dimensions are in mm
Tolerances: ±0.02 mm

Drawing Scale
1:3

Sheet Size	A3	Team Logo	

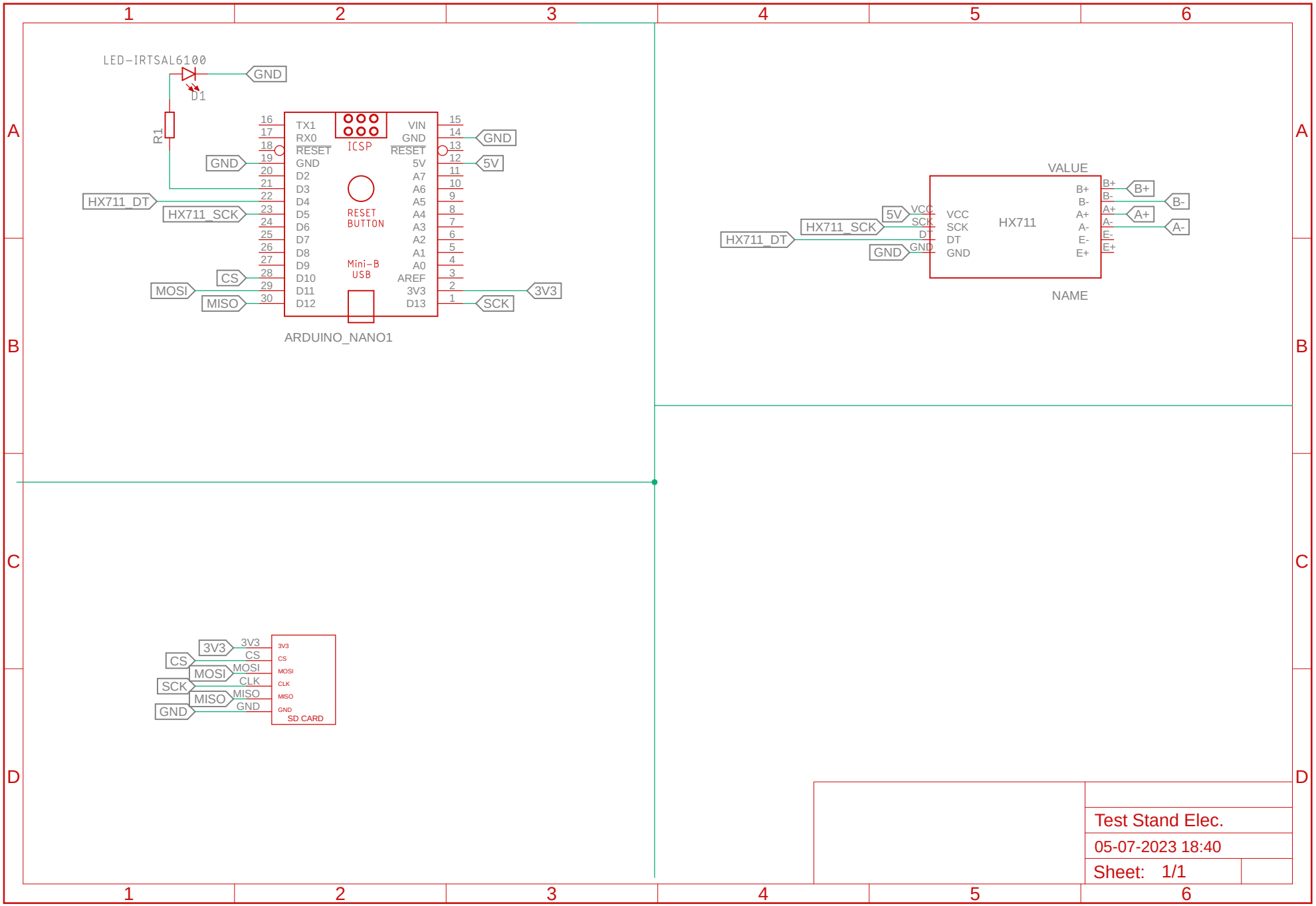
LED-IRTSAL6100
D1
R1
GND
HX711_DT
HX711_SCK
CS
MOSI
MISO
3V3
SCK
5V
TX1
RX0
RESET
GND
D2
D3
D4
D5
D6
D7
D8
D9
D10
D11
D12
VIN
GND
RESET
5V
A7
A6
A5
A4
A3
A2
A1
A0
AREF
3V3
D13
ICSP
RESET BUTTON
Mini-B USB
ARDUINO_NANO1
VALUE
VCC
SCK
DT
GND
HX711
B+
B-
A+
A-
E-
E+
NAME
CLK
MISO
SD CARD
Test Stand Elec.
05-07-2023 18:40
Sheet: 1/1

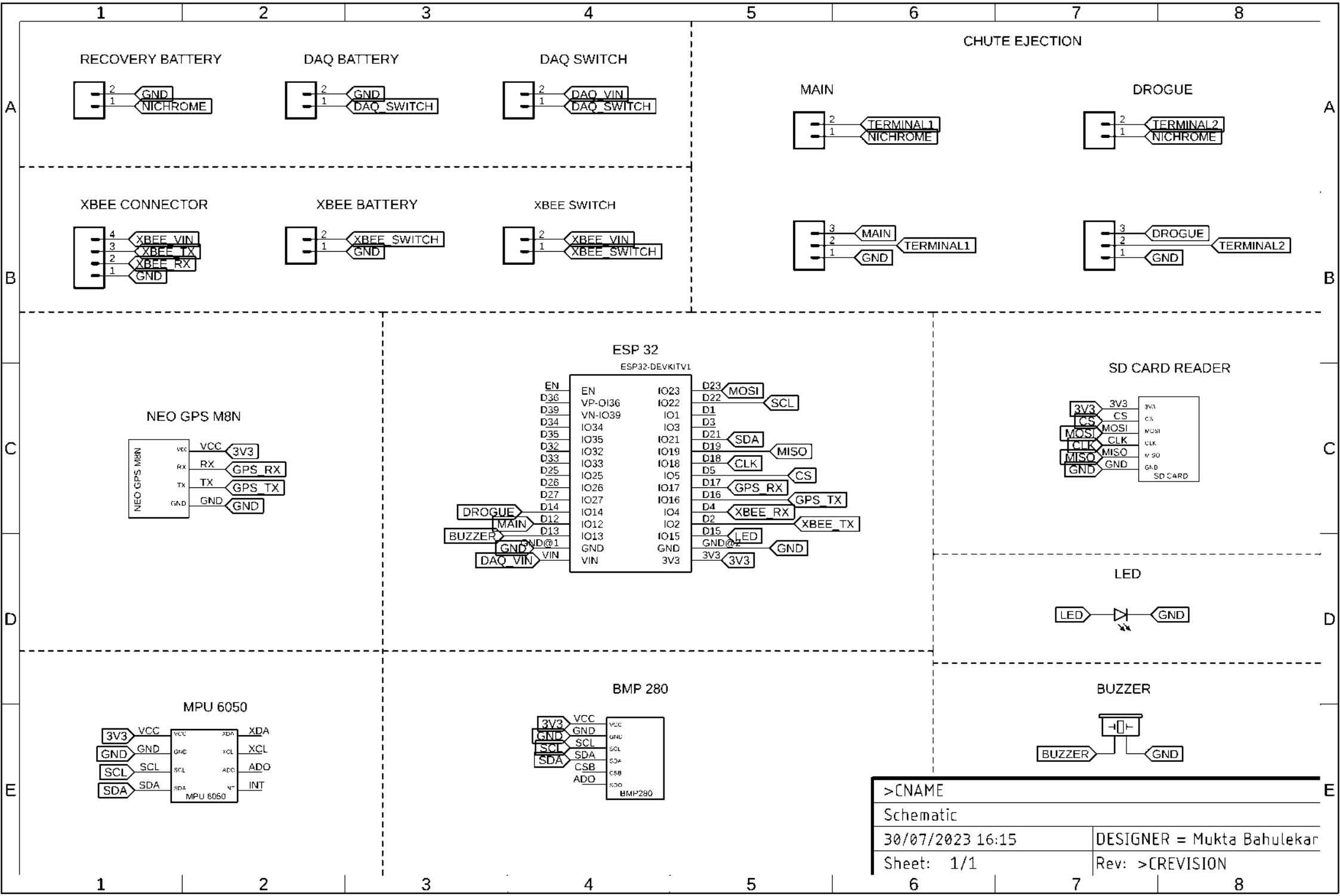
RECOVERY BATTERY
GND
NICHROME
DAQ BATTERY
GND
DAQ_SWITCH
DAQ SWITCH
DAQ_VIN
DAQ_SWITCH
CHUTE EJECTION
MAIN
TERMINAL1
NICHROME
DROGUE
TERMINAL2
NICHROME
XBEE CONNECTOR
XBEE_VIN
XBEE_TX
XBEE_RX
GND
XBEE BATTERY
XBEE_SWITCH
GND
XBEE SWITCH
XBEE_VIN
XBEE_SWITCH
MAIN
TERMINAL1
GND
DROGUE
TERMINAL2
GND
NEO GPS M8N
VCC
3V3
RX
GPS_RX
TX
GPS_TX
GND
GND
ESP 32
ESP32-DEVKITV1
EN
VP-OI36
VN-IO39
IO34
IO35
IO32
IO33
IO25
IO26
IO27
IO14
IO12
IO13
GND
VIN
IO23
IO22
IO1
IO3
IO21
IO19
IO18
IO5
IO17
IO16
IO4
IO2
IO15
GND
3V3
D36
D39
D34
D35
D32
D33
D25
D26
D27
D14
D12
D13
GND@1
VIN
D23
D22
D1
D3
D21
D19
D18
D5
D17
D16
D4
D2
D15
GND@2
3V3
MOSI
SCL
SDA
MISO
CLK
CS
GPS_RX
GPS_TX
XBEE_RX
XBEE_TX
LED
GND
3V3
DROGUE
MAIN
BUZZER
GND
DAQ_VIN
SD CARD READER
3V3
CS
MOSI
CLK
MISO
GND
SD CARD
LED
LED
GND
MPU 6050
3V3
GND
SCL
SDA
VCC
GND
SCL
SDA
XDA
XCL
ADO
INT
MPU 6050
BMP 280
3V3
GND
SCL
SDA
VCC
GND
SCL
SDA
CSB
ADO
BMP280
BUZZER
BUZZER
GND
>CNAME
Schematic
30/07/2023 16:15
DESIGNER = Mukta Bahulekar
Sheet: 1/1
Rev: >CREVISION

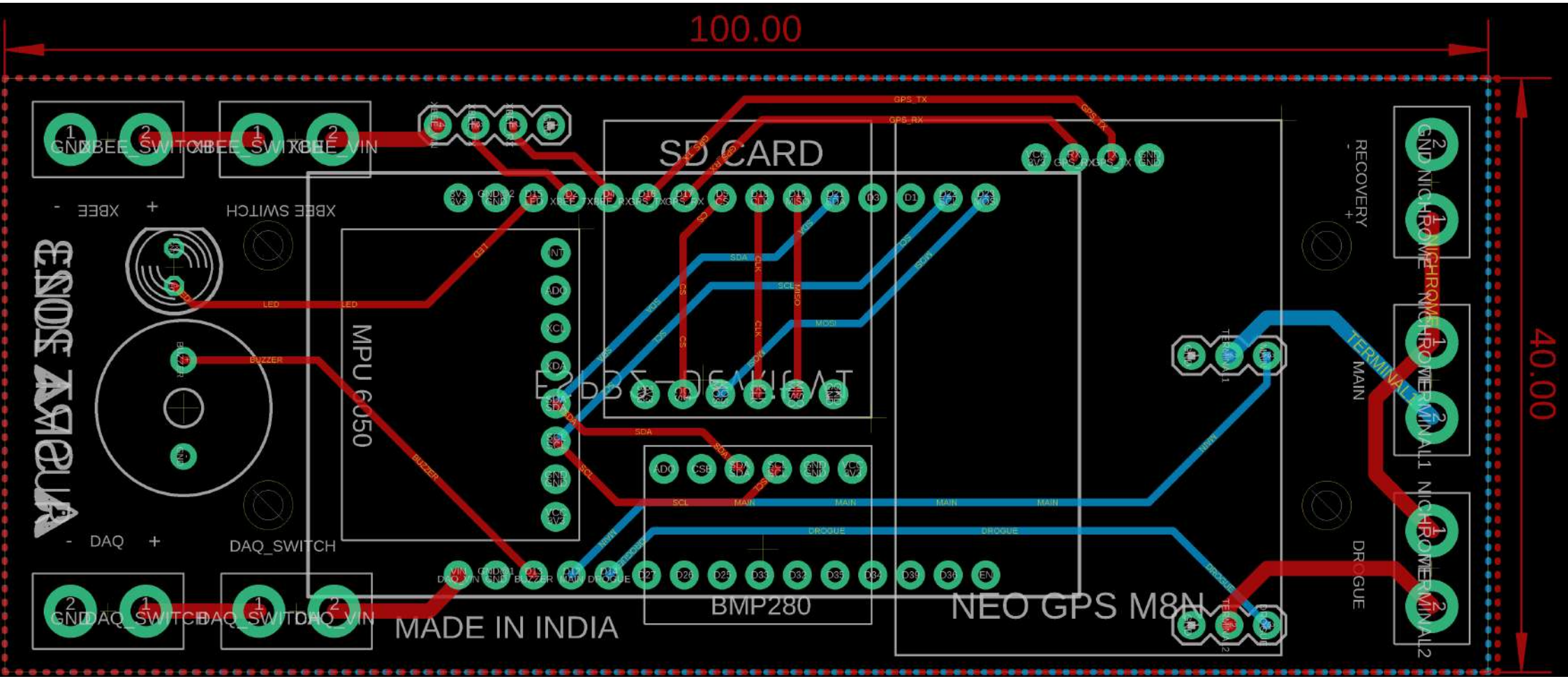
100.00
40.00
SD CARD
MPU 6050
BMP280
NEO GPS M8N
MADE IN INDIA
XBEE SWITCH
DAQ_SWITCH
RECOVERY
MAIN
DROGUE
TERMINAL1
TERMINAL2
GPS_TX
GPS_RX
SDA
SCL
MOSI
MISO
CLK
CS
LED
BUZZER
MAIN
DROGUE

Acknowledgments

The authors gratefully acknowledge the invaluable contributions and support from various individuals and organizations that made this project possible:

We extend our sincere gratitude to LEO Engineering, KK's Varsha Enterprise and Boilcon Enterprises for their unwavering financial assistance during the most critical phases of the project.

A special thanks to Aim Precision Industry Pvt Ltd, Prime Industries, and Swaraj Industries for their exceptional machining expertise, which played a crucial role in crafting all the intricate metal parts associated with the project.

We would also like to acknowledge High-On 3D printing service for their outstanding work in 3D printing the mold parts of the rocket, contributing significantly to the success of our design.

Our heartfelt appreciation goes to Carbonblack Composites for providing top-notch materials for composite manufacturing and safety equipment, ensuring the reliability and safety of the project.

We are indebted to PCBPower for their vital assistance in fabricating the PCBs for Avionics and Payload, enabling us to achieve remarkable results in those aspects of the rocket.

Our sincere thanks to Sinhgad College of Engineering for graciously providing us with a dedicated workspace to work on the rocket and motor, which played a vital role in the project's successful completion.

We are deeply grateful to Prof. Dhananjay Khankal and Mr. Aasit Vora for their invaluable technical and operational guidance throughout the project, which helped us navigate challenges and make informed decisions.

We would also like to thank LASC for allowing us to participate in the competition and for guiding our team with their profound technical expertise.

Finally, our heartfelt gratitude to the Rocketeers at STES Rocketry for their unwavering dedication and active participation in this academically rigorous project, enabling us to complete it on time and with exceptional results. Together, their contributions and support have made this project a resounding success, and we are truly grateful for their involvement in our journey.

References

Periodicals

[1]Tim Van Milligan., "What is the best fin shape for model rockets," *Peak Of Flight,* ISSUE 442, May 2nd 2017.

[2]Zachary Howard ., "How to calculate fin flutter speed," *Peak Of Flight,* ISSUE 291, July 19th 2011.

[3]Tim Van Milligan., "What is an overstable rocket," *Peak Of Flight,* ISSUE 5.

[4]Ashley Van Milligan, "How to calculate fin flutter speed," *Peak Of Flight,* ISSUE 346,August 27th 2013.

[5]Tim Van Milligan., "Selecting rocket motors for your modelst," *Peak Of Flight,* ISSUE 40.

Books

[6]V.B Bhandari., *Design of Machine Elements*, 2nd ed.,Tata McGraw Hill, 2007, Chaps. 2, 7.

[7]Knacke, T.W., 1991, Parachute recovery systems design manual. Naval Weapons Center China Lake CA, Defense Technical Information Center.

Reports, Theses, and Individual Papers

[14]Pepermans, L., Menting, E., Rozemeijer, M., Koops, B., Dahl, N.S., Suard, N., Khurana, S., van Marion, F., Kuhnert, F. and Serman, M., 2017. Comparison of Various Parachute Deployment Systems for Full Rocket Recovery of Sounding Rockets, Comparison of Various Parachute Deployment Systems for Full Rocket Recovery of Sounding Rockets

[15]Rick Newlands, Martin Heywood, Andy Lee, 2016, "Rocket vehicle loads and airframe design," Aspirepace technical papers.

[16]Barrowman. J.S. and Barrowman J.A,1966, "The Theoretical prediction of the centre of pressure," NARAM.

[17]Dr. Gerald M. Gregorek., "Aerodynamic drag of model rockets," TR-11 Model Rocket Technical Report,

[18]Newlands, R., "Rocketry aerodynamics - Aspirespace technical papers,", 2016. URL http://www.aspirespace.org.uk/downloads/Rocketry%20aerodynamics.pdf.

Electronic Publications.

[19]Lostoski, Michael R. Mr; Szucs, Jeff; and Schwenning, Matt., "Structural Design and Fabrication of a Rocket," *Honors Research Projects. 387,* [online journal], URL: "Structural Design and Fabrication of a Rocket" by Michael R. Lostoski Mr, Jeff Szucs et al. .

[20]Tom Benson., "Rocket Stability," *Beginners Guide to Rockets* [online database], URL: NASA: Rocket Stability .

[21]Ricard Nakka., "Fins for Rocket Stability," *Richard Nakka's Experimental Rocketry Website* [online database], URL: Nakka's Experimental Rocketry Site .

[22]Tom Benson., "Area Formula," *Beginners Guide to Rockets* [online database], URL: Area .

[23]Tom Benson., "Shape Effects of Drag," *Beginners Guide to Rockets* [online database], URL: Shape Effects on Drag .

[24]"U.S. Standard Atmosphere," *The Engineering Toolbox* [online database], URL: US Standard Atmosphere Air Properties - Imperial (BG) Units .

[25]Tom Benson., "Rocket Principles," *Beginners Guide to Rockets* [online database], URL: Rocket Principles - Nasa .

[26]Tom Benson., "Rocket Thrust," *Beginners Guide to Rockets* [online database], URL: Rocket Thrust .

[27]Tom Benson., "Four Forces on a Rocket," *Beginners Guide to Rockets* [online database], URL: Four Forces on a Rocket .

[28]"Table of design properties for metric hexagonal bolts M5 to M39" *EurocodeApplied.com.* [online database], URL: Table of design properties for metric steel bolts M5 to M39 - Eurocode 3 .

[29]"Metric steel bolts, screws and studs - proof and tensile strength," *The Engineering Toolbox* [online database], URL: Metric Steel Bolts - Grades and Property Classes .

[30]Daniel Cavender, "NASA High Power Rocketry Video Series Counterpart Documents, [online database], URL: High Powered Video Series Counterpart Documents .

[31]PerfectFlight, "StratoLogger SL100 USer Manual," [online database], URL: SL100 manual version final .

Computer Software

[32]Ansys, Ver Ansys Student, 2021, John Swanson Developer

[33]Open Rocket designing and simulation, Ver OpenRocket 15.03, 2021, Sampo Niskanen Developer

[34]Solidworks, Modelling, Assemblies and Drawing, Ver Solidworks 2020, Dassault Systems Developer

[35]EAGLE, Printed Circuit Board PCB Design, Ver Fusion 360, 2020, Cad-Soft Computer GmbH Developer

[36]Fusion360, Modelling, Assemblies and Drawing, Ver Fusion 360, 2020, Cad-Soft Computer GmbH Developer

Articles

[37]Röthlisberger, M.; Schuck, M.; Kulmer, L.; Kolar, J.W. Contactless Picking of Objects Using an Acoustic Gripper. Actuators 2021, 10, 70. https://doi.org/10.3390/act10040070

[38]King, L. (1930). On the acoustic radiation pressure on spheres. Proceedings of the Royal Society of London. Series, A - Mathematical and Physical Sciences, 147(861), pp.212-240.

[39] Ding, X., Lin, S., Kiraly, B., Yue, H., Li, S., Chiang, I., Shi, J., Benkovic, S. and Huang, T. (2012). On-chip manipulation of single microparticles, cells, and organisms using surface acoustic waves. Proceedings of the National Academy of Sciences, 109(28), pp.11105-11109

[40]E. K. Huckins III, "Snatch force during lines-first parachute deployments," Aerospace Research Central, 23 May 2012 https://doi.org/10.2514/3.30266