Sinhgad Institutes

Midnight Sun

Team 22 Project Technical Report for the 2022 LASC

Tanmay Kanmahale[1], Prashant Patil.[2] , Atharva Pingale[3] ,Abhishek Kakade[4] , Mukta Bahulekar[5] , Girija Wale[6] , Sahil Phule[7] , Swayam Sonar[8] , Atharva Jadhav[9] , Dipesh Sonawane[10] and Aasit Vora[11]

Sinhgad Technical Education Society, Pune, Maharashtra, 411041, India

Prof. Dhananjay V Khankal[12]

Sinhgad Technical Education Society, Pune, Maharashtra, 411041, India

This project details the design, manufacture, and testing of STES Rocketry's high-powered rocket, to compete in the 1,000m AGL apogee Solid motor category at the 2022 LASC. This rocket, *Midnight Sun*, is a 2.3m completely custom fiberglass rocket equipped with an SRAD L1882 60mm solid motor. Current models project *Midnight Sun* will reach an apogee of 1,226m AGL. The rocket is designed to deploy a single pilot chute at apogee, and pull out the main chute at 1000ft using SRAD Line Cutters. The payload will accurately track the rocket's trajectory using only inertial and barometric sensors.

[1] Student, Aerostructures, kanmahaletanmay@gmail.com
[2] Student, Propulsion, prashantamarsihpatil@gmail.com
[3] Student, Analysis-Recovery, atharva99pingale123@gmail.com
[4] Student, Payload, abhishek.phbya19@sinhgad.edu
[5] Student, Ground Station, mukta.vrwyu21@sinhgad.edu
[6] Project Lead, Avionics, girijawale432@gmail.com
[7] Student, Avionics, sahilphule2003@gmail.com
[8] Student, Propulsion, 2002swayam.sonar@gmail.com
[9] Student, Aerostructures, atharvajadhav611@gmail.com
[10] Student, Operations, dipeshsonawane2212@gmail.com
[11] Grad Student, Recovery, vora.cphfy18@sinhgad.edu
[12] Faculty Advisor, Department of Production Engineering, dhananjaykhankal@sinhgad.edu

To inspire the next generation of rocket scientists.
To make space for everyone.

Nomenclature

A	=	*amplitude of oscillation*
Ai	=	*burn area of the propellant*
a	=	*cylinder diameter*
AR	=	*aspect ratio*
Br	=	*regression rate*
CD	=	*drag coefficient*
Cp	=	*pressure coefficient*
Cx	=	*opening force coefficient*
c	=	*chord*
cf	=	*thrust coefficient*
cr	=	*root chord*
c^*	=	*exhaust velocity*
d	=	*grain density*
DO	=	*parachute nominal diameter*
dt	=	*time step*
F	=	*thrust*
FD	=	*drag force*
F_{max}	=	*maximum thrust*
F_O	=	*parachute opening force*
F_x	=	*X component of the resultant pressure force acting on the vehicle*
F_y	=	*Y component of the resultant pressure force acting on the vehicle*
f, g	=	*generic functions*
g	=	*gravity*
G	=	*fin material shear modulus*
h	=	*grain height*
I_{sp}	=	*specific impulse*
It	=	*total impulse*
i	=	*variable index*
K	=	*trailing-edge (TE) dimensionless angular deflection rate*
Kn	=	*ratio of the burn area of the propellant to the area of the nozzle throat*
Kn_{max}	=	*maximum Kn value obtained*
K_p	=	*empirical constant*
l_e	=	*suspension lines length*
m	=	*rocket's mass without propellant*
m_p	=	*propellant mass*
n	=	*number of grains*
P	=	*pressure*
p_c	=	*average combustion chamber pressure*
p_{ext}	=	*external pressure*
R	=	*external radius of the grain*
r	=	*internal radius of the grain*
r_e	=	*nozzle exit radius*
r^*	=	*throat radius*
S	=	*parachute area*
t	=	*fin thickness*
t_b	=	*burn time*
V	=	*terminal speed*
V_X	=	*opening relative velocity*
V_f	=	*maximum Mach number*
W	=	*weight*
ρ	=	*air density*
η_{cf}	=	*efficiency of the thrust coefficient*

I. Introduction

STES Rocketry is an interdisciplinary student-run organization dedicated to developing engineering talent through design, construction, testing, and showcasing complex rocket systems powered by high-powered rocket engines. The four main goals of SRT are to (1) Compete in and win the Intercollegiate Rocket Engineering Competition, (2) Develop a link between academic studies and technical challenges through real-world applications, (3) Improve social interaction as part of an engineering team, and (4) To prepare students for public speaking and research articles. The core principle of this team is to develop our members into talented engineers by providing them with the necessary skills and tools to grow and succeed. Every day we aim to accomplish feats only thought possible in the industry by incorporating professional design reviews, rigorous testing, and in-depth documentation of individual systems, hardware, and software.

The bridge between the classroom and the workroom is one of the most valuable components the team provides to students. Students have the opportunity to apply and expand their engineering education through real-world design and fabrication challenges through SRT. SRT is made up of undergraduate student applicants from all Sinhgad Institutes Engineering campuses. This means that on our team, freshmen have the unique opportunity to work on a project alongside seniors and graduate students, as well as participate in practical, hands-on aerospace applications. One of the team's primary responsibilities is to make rocket science a more popular career choice and to promote STEM disciplines among students.

The team is led by a Project Manager and is divided into two sections: management and technical. The management division includes Public Relations, Finances, Logistics, and Operations. The PR team is in charge of sponsorship and communication, while the Finances department is in charge of accounts and budgets. The Logistics team handles team travels such as test launches, Preliminary and Critical Design Reviews, and on-site arrangements at the launch venue. Finally, the Operations team is in charge of all technical aspects of launches, such as purchasing competition motors, arranging launch sites, and, most importantly, compiling checklists and procedures to ensure a successful rocket launch. On launch days, the Mission Supervisor is in charge of ensuring that the checklists are followed and that the rocket is ready to launch on time. System Engineering leads the technical division, which is made up of six sub-teams: Avionics, Payload, Propulsion, Recovery, Analysis, and Aerostructures. Each one takes care of its namesake part in the rocket.

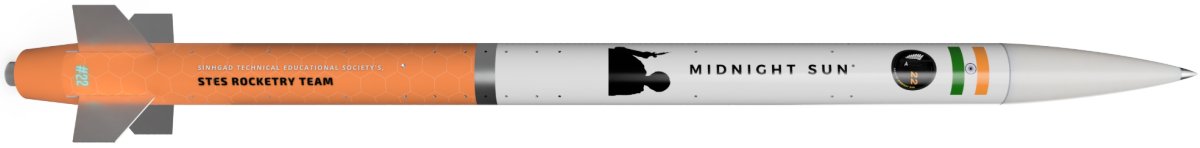

Figure 1: Midnight Sun

II. System Architecture Overview

A. Propulsion Subsystem

1. Motor Overview

The propulsion team is in charge of developing and producing the motor and propellant. These critical gaps involve investigating propellant production processes, cooking and molding the propellant grains, dimensioning and manufacturing the motor, developing diverging and converging nozzles, and carrying out static fire tests on the motor to ensure correct behavior. This subsystem has a significant impact on overall rocket performance: changing the kind of propellant, its formula, or shape alters the rocket class or flight behavior. As a result, when building its motor, the propulsion team must consider the entire rocket structure and objective.

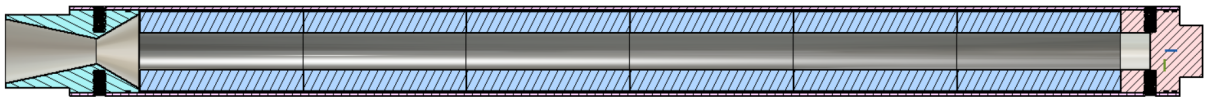

Figure 2: SRT-1 Motor Cross Section

a. Specifications

SRT-1's external structure is composed of a casing and two retainers (one in contact with the thrust bulkhead at the upper end and another with a hole for the nozzle exit at the inferior end), made out of Aluminium. The 747mm long case houses 6 KNSB bates grains generating an average thrust of 1882N by compressing the hot gases and expanding it through the nozzle. The motor passes the loads generated through the forward closure in contact with the thrust bulkhead and up through the fuselage. Both the nozzle and the forward closure are bolted to the motor case using eight M8 carbon steel screws.

There are six hollow cylindrical propellant grains inside the motor. Our propellant type is KNSB: its composition in mass is 35% of sorbitol, 65% of potassium nitrate, and 1% Ferric Oxide. Each of our BATES grains has 110 mm in length, 56 mm of inner diameter, and 25mm in core diameter. All of them are externally surrounded by sheets of canvas prepregd with glycerin, which works as an inhibitor and ensures the desired burn area throughout the motor's operation.

The motor has a converging-diverging nozzle with a conic shape. The converging section has an angle of 30° and the diverging one has an angle of 12°. SRT-1's nozzle is made of Aluminium 6061 and has one o'ring groove on its outside cylindrical surface, for sealing. The o'rings are made of nitrile rubber and have 2 mm in thickness and 89.8 mm in diameter.

At the time of writing this report, the static test is TBD, and hence the performance characteristics are based on OpenMotor software simulation results.

Table 1: SRT-1 Specifications

Specification	**Value**	**Units**
Total mass	3579	g
Empty mass	1432	g
Propellent mass	2147	g
Burn Time	1.35	s
Average Chamber Pressure	915	psi
Total Impulse	2596	Ns
Specific Impulse	123.33	s
Maximum Thrust	2174	N
Average Thrust	1882	N

b. Propellant Composition

Choosing a Propellant was a difficult issue for the crew. We must determine whether it is available to us for legal operation, at an acceptable price, and meets our requirements. So we went with KNSB since it checks all boxes. Potassium nitrate is not flammable and has a low health rating. It has a grade of three in terms of instability, which is to be anticipated given that we want it to be explosive enough to launch our rocket. The combustion

process produces potassium carbonate. It has a health rating of two, but because it is hygroscopic, it absorbs water quickly after it is generated and is therefore diluted.

$$13.8KN0_3(s) + 4.007C_6H_{14}O_6(s) + 0.135Fe_2O_3(s) \rightarrow 9.28H_2O(g) + 9.6CO(g) + 4.11H_2(g) + 7.2CO_2(g) + 6.9N_2(g) + 6.8K_2CO3(l) + 0.2KOH + 0.269FeO(s)$$

Table 2: Selected Fuel Composition

Potassium nitrate (KNO_3)	**Sorbitol (SB)**	**Ferric Oxide (Fe_2O_3)**
65%	34%	1%

c. Simulation

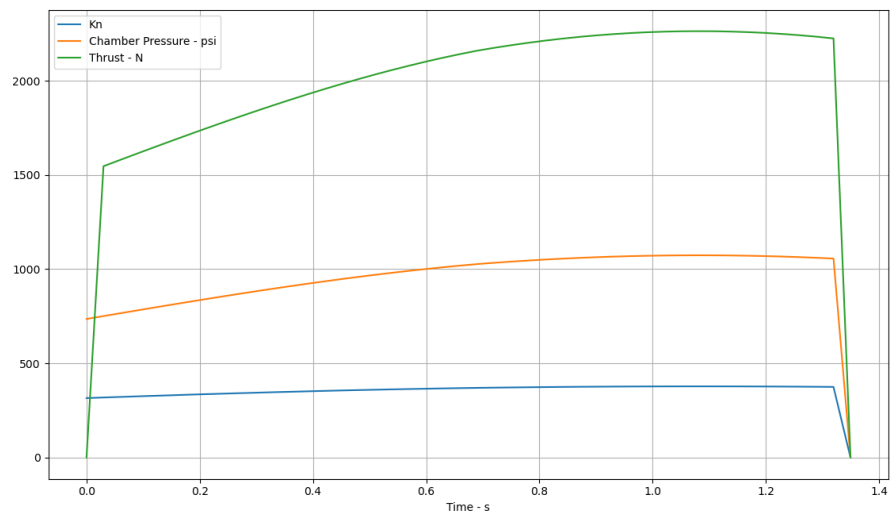

Figure 3: Thrust Curve, Pressure Curve, and Kn vs time curve of SRT-1

Simulation-Based on OpenMotor, SRT-1 reaches a peak chamber pressure of 1073 psi, which gives the case a minimum factor of safety 2 based on static structural simulation on Fusion360. This would ensure the case would resist the pressure generated at its peak.

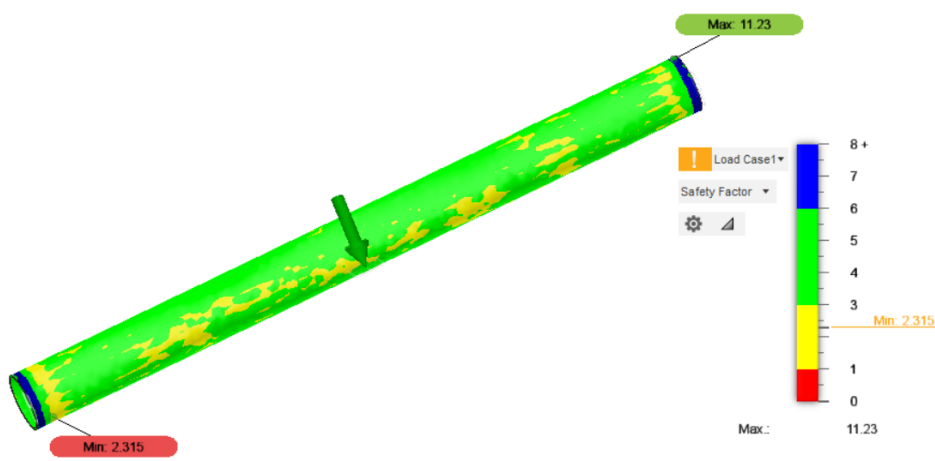

Figure 4: Static structural simulation on motor case

B. Aerodynamics and Structures Subsystem

1. Base Structure

The rocket body is entirely fiberglass and is broken up into 3 sections. These sections include the Nosecone, Upper Airframe, and Booster tube with components such as nosetip at the top, avionics-payload stack, aluminum coupler, centering ring, fin assembly, and boattail at the aft. It is designed to reach an apogee of 1000 m AGL carrying a 3 Kg Payload with an L-Class SRAD Solid motor.

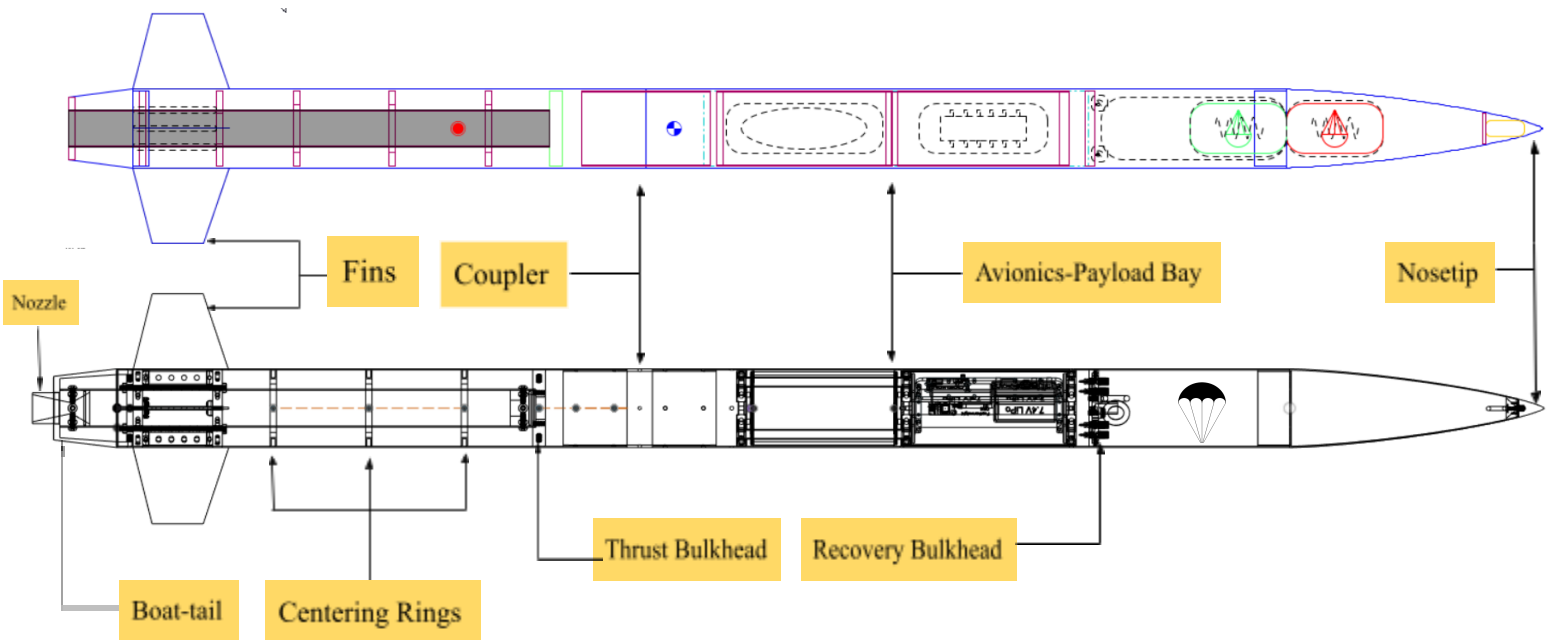

Figure 5. Project Midnight Sun-Structure Overview

Table 3: Data Summary

Lengths	mm
Diameter	124
Length	2300
Nosecone Length	400
Recovery	300
Electronics Stack	266
Payload	266
Booster Tube	800
Tail Length	100

Part	Characteristic
Nosecone Shape	Von Karman
Fuselage Material	Fiberglass and PETG
Fin Shape	Trapezoidal
Tail Shape	Conical
Number of fins	4
Number of Rail buttons	2
First Rail button**	190 mm
Center of Mass*	1330 mm
Center of Pressure*	1690 mm
Second Rail button**	-110 mm

Masses	Kg
Vehicle Mass	10.168
Propellant mass	2.147
Payload Mass	3
Loaded Mass	15.2

**Distance from Nose **Distance from C.G.*

2. Nosecone

Figure 6. Nosecone CAD

The Nosecone is a Haack series intended to reduce aerodynamic drag. With a 400 mm length, 124 mm diameter, and a shape parameter of 0, this shape has a fineness ratio of 3.1 to 1. The nose cone shoulder has a simple tubular design with a 120 mm outer diameter and 50 mm length. For both the airframe and the shoulder, the thickness was set to 2 mm. E Glass Fiber is used to create the nose cone airframe. The Nosecone is manufactured using MDF-made female molds.

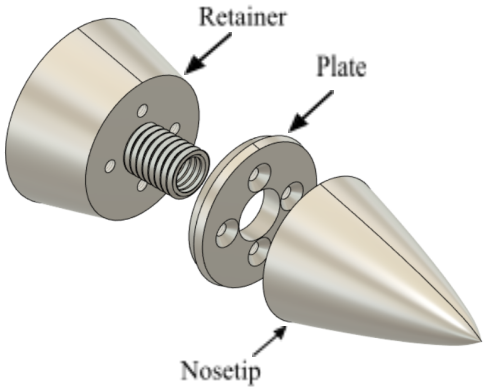

Figure 7. Nosetip Exploded View

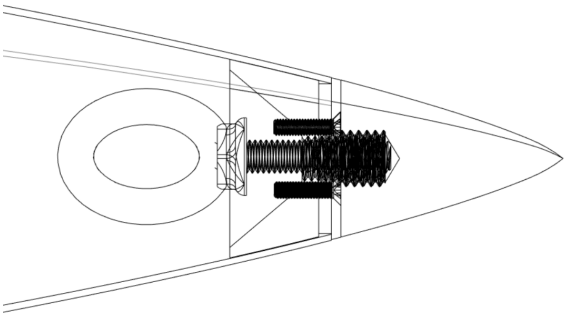

Figure 8. Nosetip Assembly (Wireframe)

Aluminum 6061 material is used for the Nosetip and is manufactured using a CNC lathe along with Nosetip Retainer and Plate. With a Precision top, Nosetip will offer heat resistance during the flight. Exploded and Assembly wireframe views of the Nosetip are shown in Figures 3 and 4.

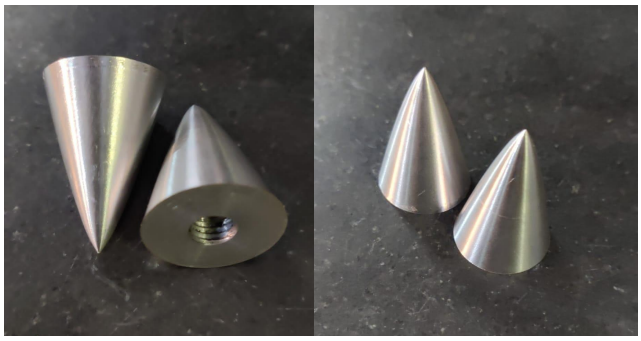

Figure 9. Manufactured Nosetip

3. *Fins*

a. *Shape Study*

Our rockets have trapezoidal-shaped fins. These fins were manufactured by laser cutting an aluminum 6061 sheet that was 3mm thick. In open rocket software, Fin's dimensions were designated with the launch vehicle's stability as the top consideration.

Table 4: Fin Parameters

Material	Number of Fins	Root Chord	Tip Chord	Height	Sweep length	Sweep angle	Thickness
Aluminum 6061	4	150 mm	80 mm	120 mm	40 mm	18.4 degrees	3 mm

These fins are fastened by 1 mm thick aluminum slots and are installed using PETG material 3-D printed fin can rings.

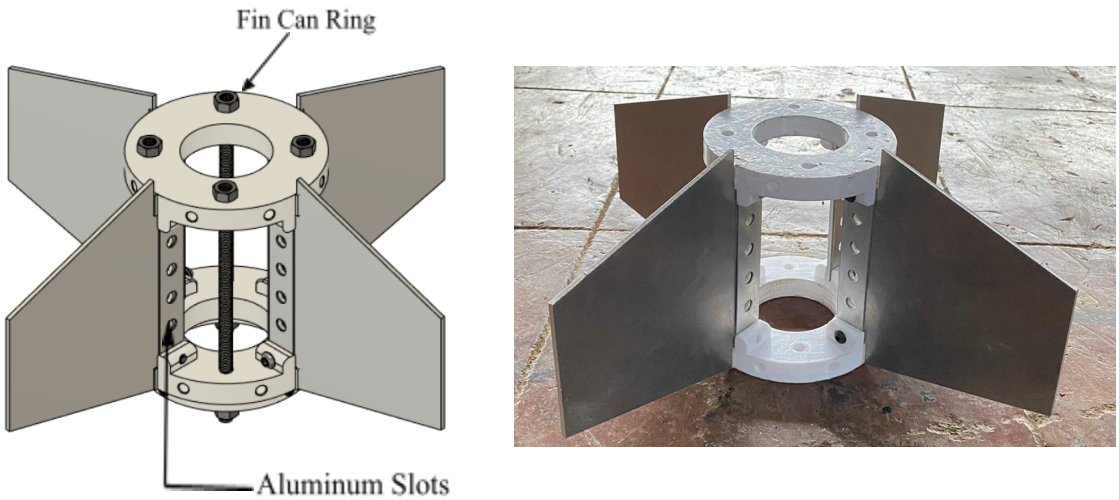

Figure 10. Fin Assembly

b. *Flutter*

Fluttering is a condition that is experienced by fins during flight. According to FIN-SIM software, our rocket's fins will experience flutter at a peak velocity of 622.89 m/s or at Mach 1.85. The additional results are shown in the below table.

Table 5: Fin Flutter Characteristics

Divergence m/s*	**Flutter m/s***	**Lift Slop CN-α**
396.54	622.89	0.0718

**(The above velocities are critical, hence it should not be exceeded)*

4. *Structure and Analysis*

a. *General Considerations*

Computational structural simulations were performed using ANSYS and Fusion360 software to ensure the rocket's structural integrity.

The strategy used was to identify the most critically loaded parts, simulate them, and then apply the results to other less critically loaded cases. The following criteria were used to identify those parts:

- Type of load: The highest loads are applied to the rocket at two key moments of flight. One of them occurs when the motor thrust is at its maximum. The other occurs after the apogee is reached and the recuperation system is activated. As a result, critical loaded parts were identified separately in these two instances.

- Geometry: Midnight Sun is made up of various parts with varying geometries and structural behaviors. As a result, one component of each main geometry with important structural functions was simulated (tubes, couplers, bulkheads and eyebolts).
- Load value: The part with the highest load value was chosen as critical in each group of parts with similar geometries.

The tubes, couplers, bulkheads, and eyebolts were classified as critically loaded using these criteria. The inertial load (mass being accelerated), motor thrust, and specific loads of each part were all taken into account. RocketPy provided the data for these boundary conditions. The recovery and propulsion areas also estimated the parachute opening force and the internal pressure of the motor. All of the obtained safety factors are related to the yield stress of the aluminium alloy.

b. Tubes

Both tubes, upper airframe and booster tube are manufactured using E Glass fiber on a cylindrical mild steel mandrel using a wet layup process.

(a) *(b)*

Figure 11. (a) Wet Layup Process, (b) Fiberglass tube

E Glass Fiber of 400 GSM was chosen because of its Strength and is comparatively less expensive than carbon fiber. For testing, a compression load using a universal testing machine (UTM) was applied to a tube and the results were quite impressive. Conclusion: The 2 mm thick fiberglass tube can withstand up to a maximum force of 40 KN before fracturing.

(a) *(b)*

Figure 12. (a) UTM Testing, (b) After Compression Testing

c. Couplers

Coupler tube of Aluminum 6063 is used to connect the upper airframe with the booster tube. This tube is manufactured using a lathe machine. A hole of 5 mm is made on a coupler for booster tube venting.

Coupler Tube

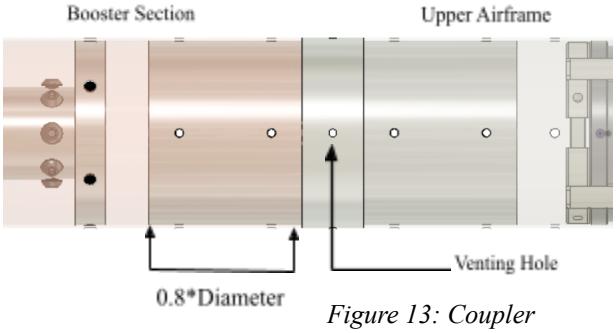

Figure 13: Coupler

d. Bulkheads

The Fuselage Consists of two main bulkheads: Thrust Bulkhead (Aluminum 6061) and Recovery Bulkhead (Aluminum 6063). These bulkheads are manufactured using a VMC machine. Static structural analysis were done using Ansys Mechanical and Autodesk Fusion 360 to replicate the performance of the bulkhead during flight.

The Result of the CAE simulations is shown in Figures 14 and 15. The thrust bulkhead was subjected to a load of 3000N (The actual maximum thrust of our motor being 2174N), keeping the screw inserted portion as fixed support. The safety factor for Thrust bulkhead was found to be 4.14 which seems our component is safe and not overdesigned. For the recovery bulkhead, a snatch force was calculated and a load of 1300N (actual snatch force being 1200N) was applied. The results show a minimum safety factor of 4.04 for recovery bulkhead which seems acceptable.

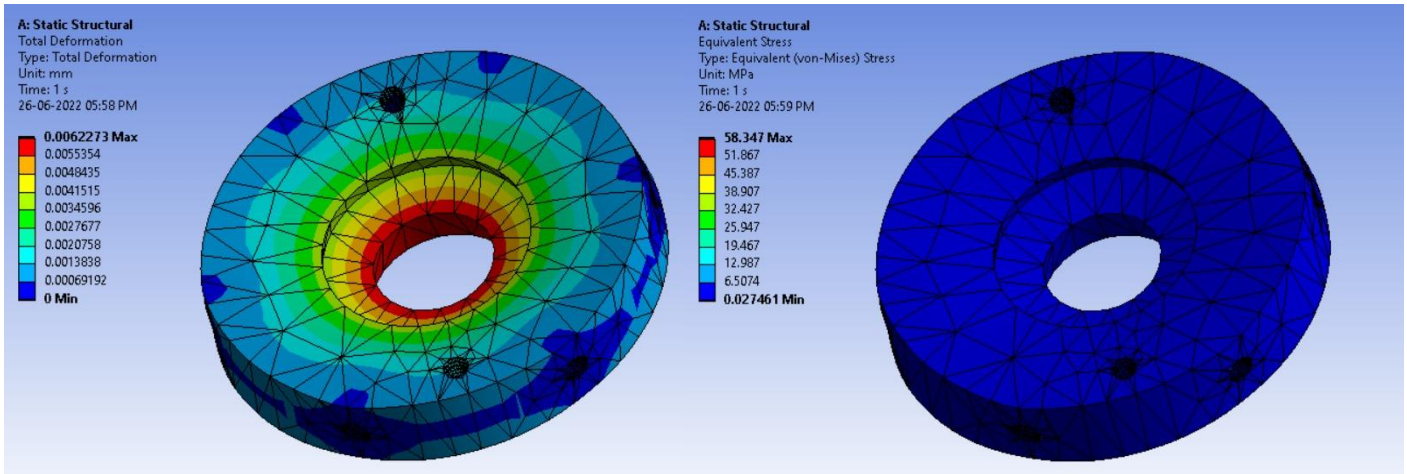

Figure 14. Thrust Bulkhead: Total Deformation and Equivalent (Von-Mises) Stress

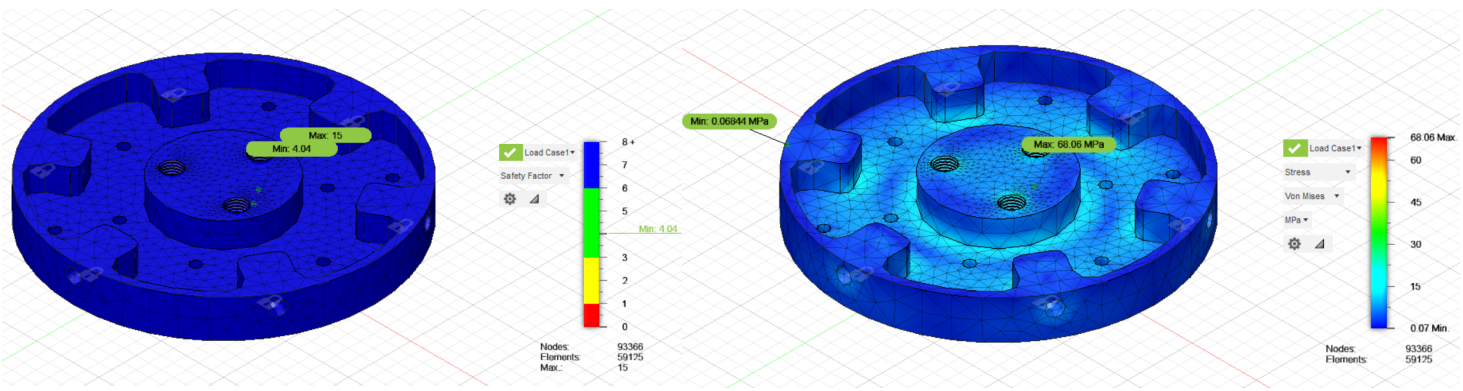

Figure 15. Recovery Bulkhead: Factor of Safety and Equivalent (Von-Mises) Stress

5. *CFD Analysis*

We performed CFD analysis with the help of Autodesk CFD in order to observe the airflow over the rocket body (especially over the nosecone, fins, and boat tail) at a specific velocity.

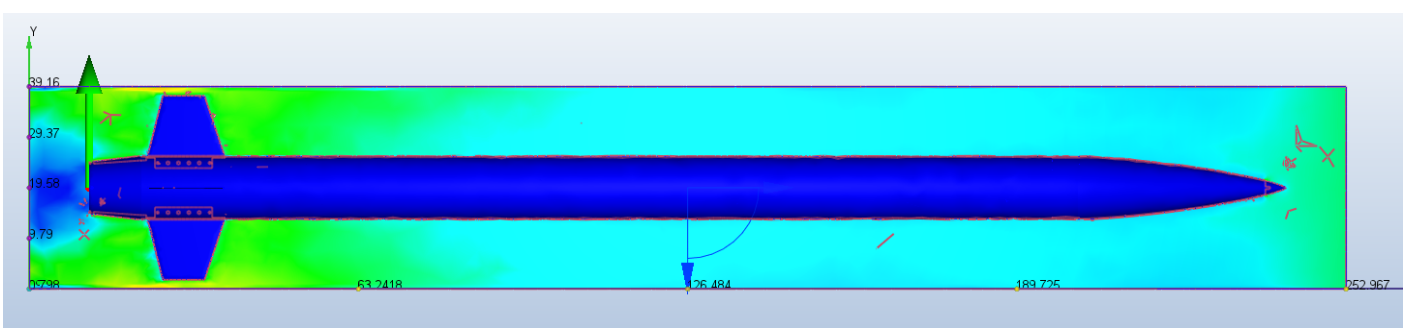

Figure 16: Velocity Magnitude Profile at 200 m/s (Air Flow)

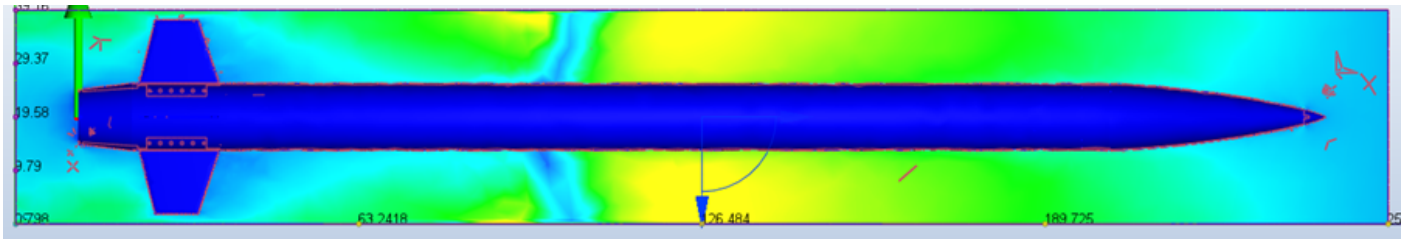

Figure 17: Velocity Magnitude Profile at Mach 1

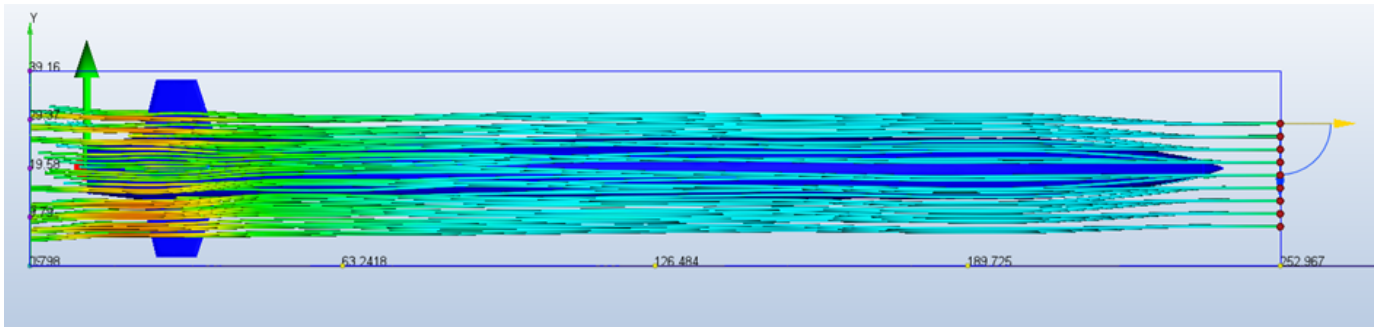

Figure 18: Streamline Flow over Rocket body at 200 m/s (Note flow over Nosecone, Fins, and Boat-tail)

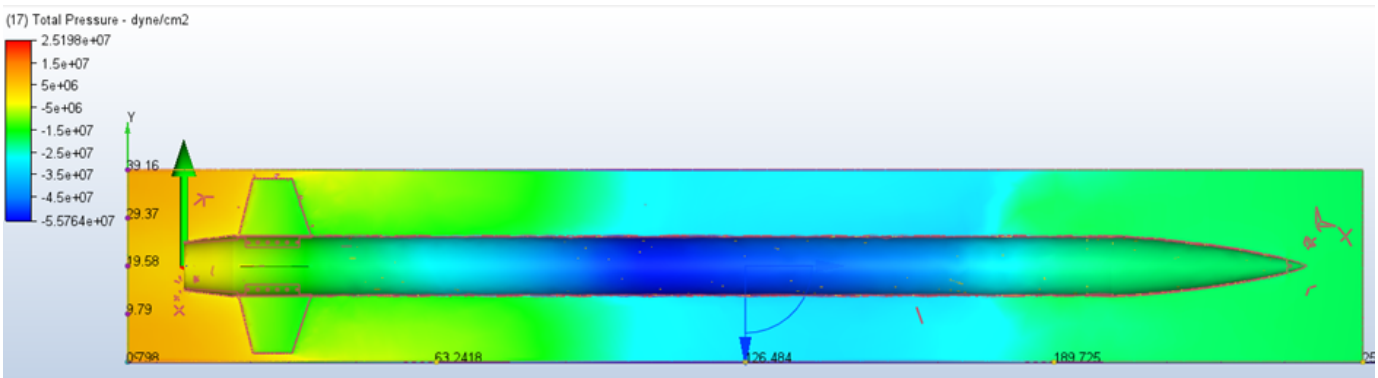

Figure 19: Pressure Distribution at 200 m/s

6. *Flight Analysis*

The team used RocketPy, Project Jupiter at USP's 6 degrees of freedom flight simulator, for Midnight Sun's flight analysis. The simulations provided data on the rocket's trajectory as well as several contrast inspections between project decisions, such as the addition of airfoils and a tail in previous sections. Furthermore, the Monte Carlo method was used to evaluate predicted apogee, aerodynamic stability, and dispersion.

a. *Trajectory Simulation*

To begin the trajectory simulation analysis, all of the environmental conditions must be defined. The atmospheric conditions used in the competition were based on previous team data, ECMWF forecasts were used, and all data was saved for future analysis. The figure depicts the wind profile as well as other important information about the atmospheric model used in the simulation. The software also provides temperature and pressure profiles, which are not depicted in the figure. Finally, the launch rail is 6 m long and is located at latitude -23.363611° and longitude -48.011389°, indicating that the launch was simulated at Cape Canavial. The altitude above sea level at these coordinates is approximately 668 m. The wind profile and air characteristics are shown in Fig. 20.

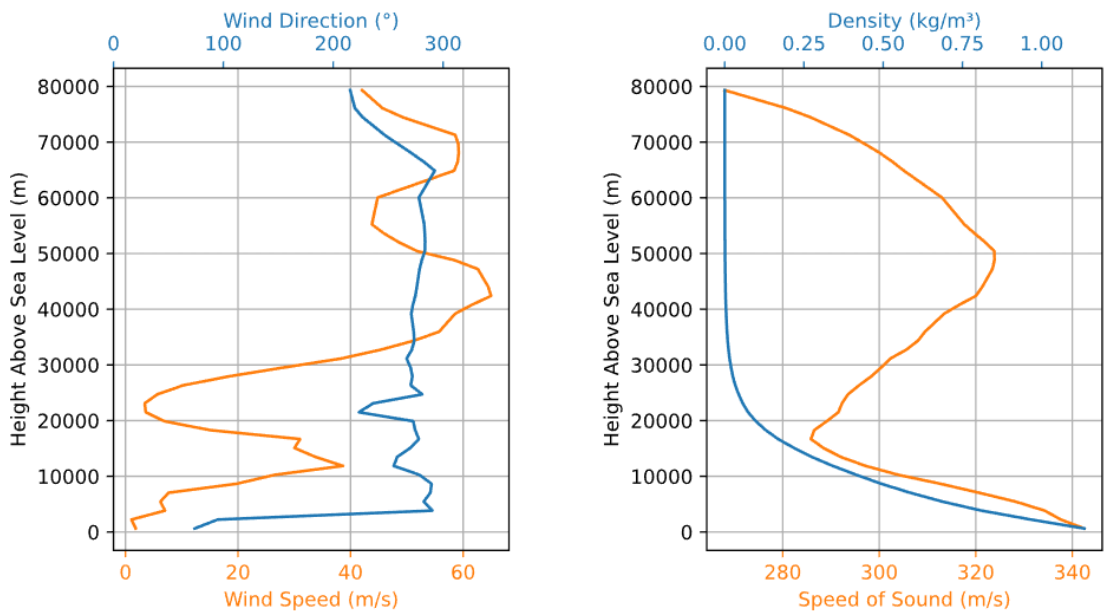

Figure 20: Environment

The simulator received information about the motor, rocket, and parachute after the environmental conditions were defined. The thrust curve, propellant mass, and geometrical parameters of the motor are the most important data. The propulsion section of this document contains all of the information about Midnight Sun's motor. The most important input data for the parachute are its Cd and opening delay. Finally, the simulator will take many of the rocket's geometric, inertial, and aerodynamic data as inputs. This data is easily obtained by using commercially available rocket simulators such as OpenRocket and RasAERO-II.

A simulation of the rocket can be obtained with all of the necessary information. A three-dimensional trajectory graph and a whole lot of data on the rocket's flight performance can be examined. Taking into account the variation of the speed of sound with altitude, the rocket has a predicted apogee of 1226 m AGL, reaching a maximum speed of 166 m/s at 1.35 s after ignition, with a maximum Mach number of 0.5 It also has a maximum acceleration of 145 m/s^2 at 1.2 s, which can be represented as 14.78g when divided by the local gravity acceleration.

Fig. 21a depicts the predicted rocket trajectory from Midnight Sun's flight simulation, assuming that both parachute phases function normally, main deploying at apogee at 21b and a total recovery failure scenario (ballistic) is depicted in Fig. 21c. Table 6 contains additional information on these two flight simulations. Figure 22 depicts Midnight Sun's vertical speed and acceleration, while Figure 23 depicts the resulting drag load.

Table 6: Flight Simulation Results

Event	**Normal**	**Main at Apogee**	**Ballistic**
Speed at liftoff (m/s)	30.005	30.005	30.005
Static Margin at burnout	3.55c	3.55c	3.55c
Time of Burnout (s)	1.35	1.35	1.35
Altitude at Burnout (m)	103.18	103.18	103.18
Velocity at Burnout (m/s)	166.995	166.995	166.995
Time of Apogee (s)	15.984	15.984	15.984
Altitude at Apogee AGL (m)	1226.907	1226.907	1226.907

Freestream Speed at Apogee (m/s)	21.845	21.845	21.845
Time of Main Deployment (s)	69.281	17.49	-
Altitude of Main Deployment (m)	318.659	1216.007	-
Freestream Speed at Main Deployment (m/s)	17.253	26.201	-
Impact X coordinate (m)	-93.089	-120.443	107.09
Impact Y coordinate (m)	-915.319	-2644.688	408.953
Impact Vertical Velocity (m/s)	-4.788	-4.788	-106.626

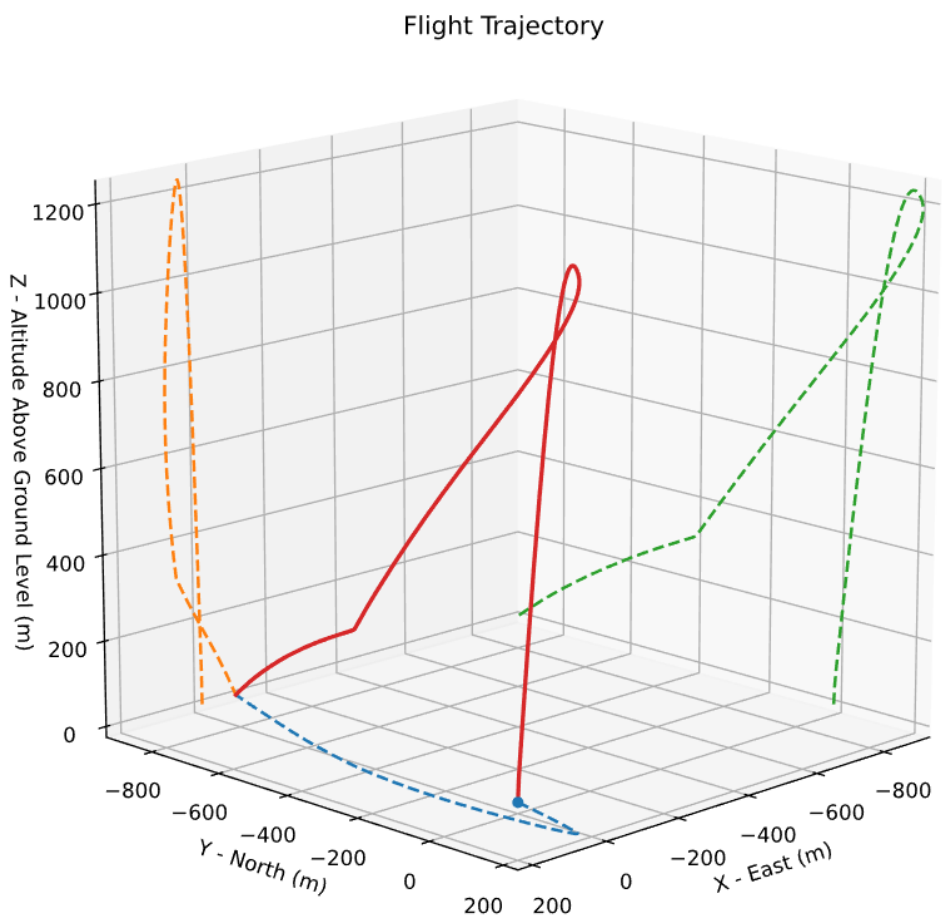

(A)

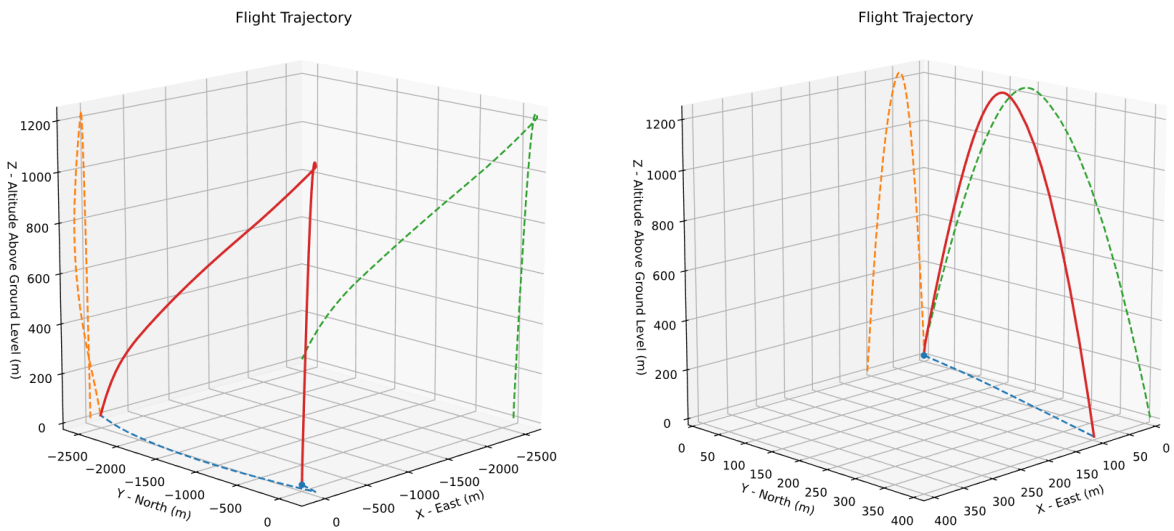

(B) *(C)*

Figure 21: Predicted flight Trajectory when (A) Ideal Conditions (B) Main Deployed at Apogee (C) Ballistic Flight

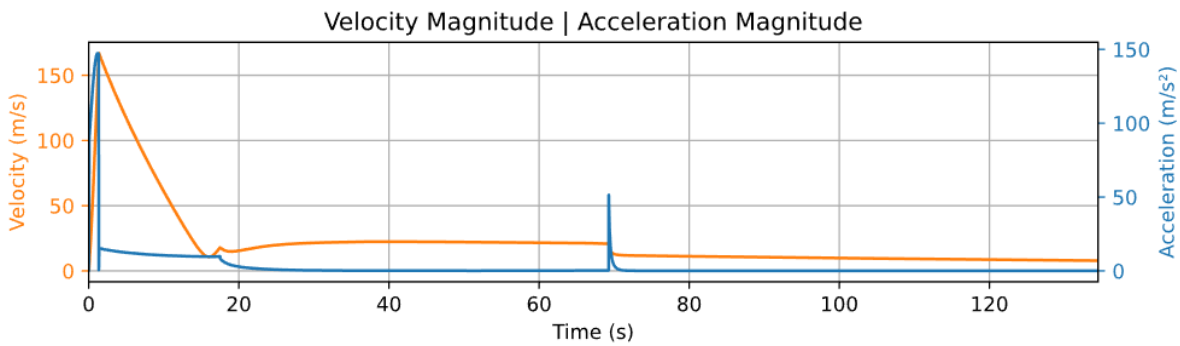

Figure 22: Linear kinematic results

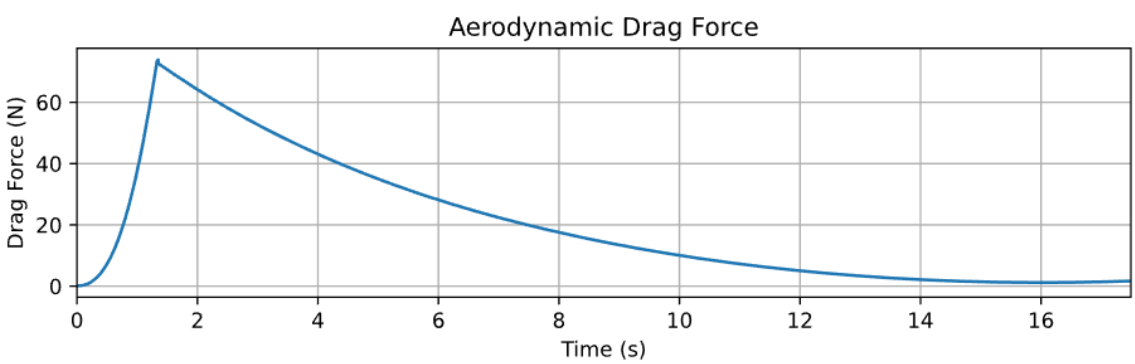

Figure 23: Forces on Midnight Sun's fuselage

b. Aerodynamic Stability

Aerodynamic stability is defined as a rocket's ability to maintain its trajectory in the face of external forces. The static margin of the rocket is a good way to measure this.

Several different analyses of the rocket's static margin were performed using RocketPy. First, a graph depicting the change in the overall static margin of the rocket over time was created (Fig. 24). The burning of the rocket propellant causes a variation in the position of the rocket's center of mass, resulting in a change in the static margin.

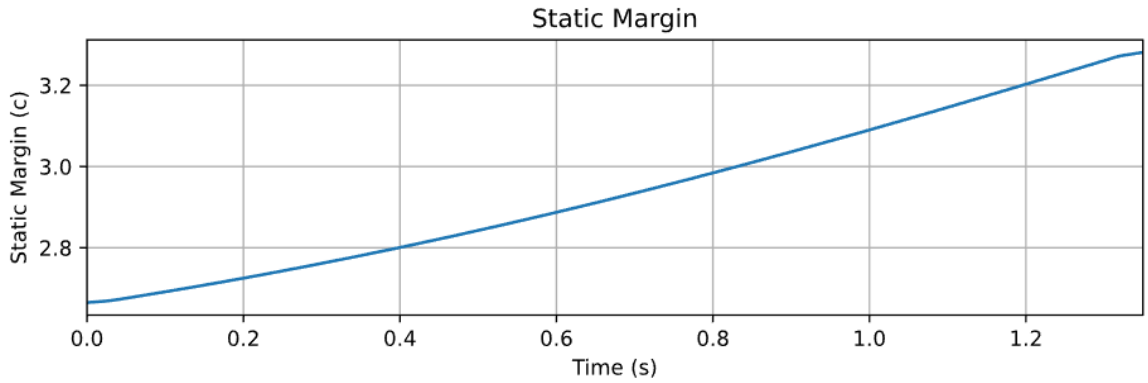

Figure 24: Stability over time Curve

Analyzing the attitude angle over time for different static margins can help predict when the rocket will be the most stable. [18] recommends a static margin of 1.5c to 2c for rockets. The author also suggests adding one caliber for thin rockets. In Fig. 25, it is possible to see which static margin values will be the most optimal. The graph depicts the attitude angle values over time for various static margin values at a standardized launch with a 5m/s side wind.The legend displays static margin values at the start of the launch, when the rocket leaves the rail, and at the apogee, in that order. As a result, the initial static margins of 2.29c and 2.90c appear to be stable, with the lowest deviations from the original rail departure angle before the rocket recovers its trajectory.

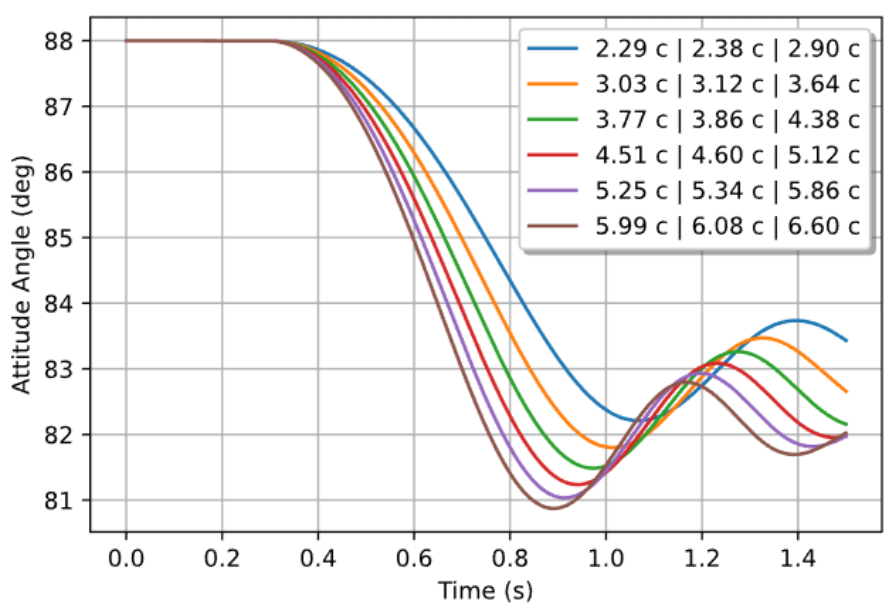

Figure 25: Attitude Angle by time for different static margin values.

Understanding a rocket's ability to recover can be critical in studying its stability. Thus, the lift forces acting on the rocket during its flight are useful for analyzing its stability. Fig. 26 depicts the lift forces acting on the rocket during the flight until apogee, and it is possible to confirm that the rocket is capable of self-stabilization by looking at the later stages of the graph. The lift force in the Y-axis is represented by R1, and the lift force in the Z-axis is represented by R2.

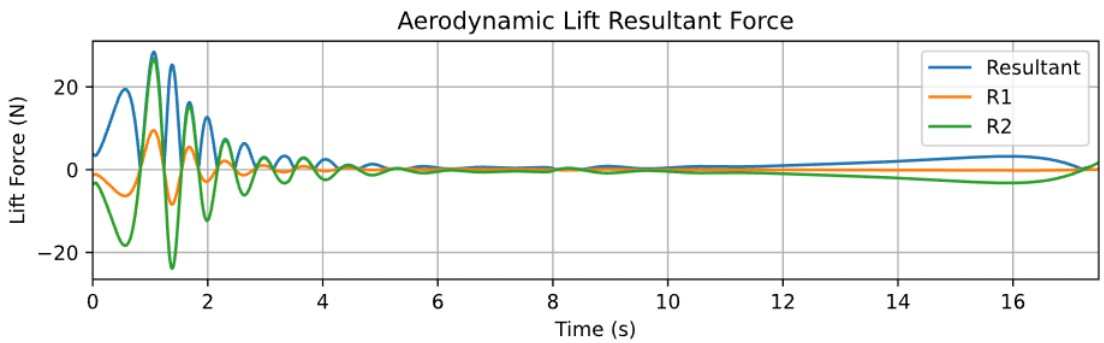

Figure 26: Lift Forces during flight

c. Dispersion Analysis

RocketPy was used to plot the dispersion simulation. 2,000 flights were simulated using small variations in environmental and rocket data to evaluate the most likely apogee and rocket landing locations, allowing the delimitation of dispersion zones. The blue ellipses in Fig. 27 represent the apogee dispersion, while the red ellipses represent the landing dispersion. The ground recovery team will be authorized to begin searching for the rocket once the landing has been confirmed. The team will be able to predict where it is based on its trajectory and the dispersion simulation. Our telemetry system will also provide GPS data to the recovery team, indicating Midnight Sun's location. Figure 27 depicts a phase chart that summarizes the mission flight.

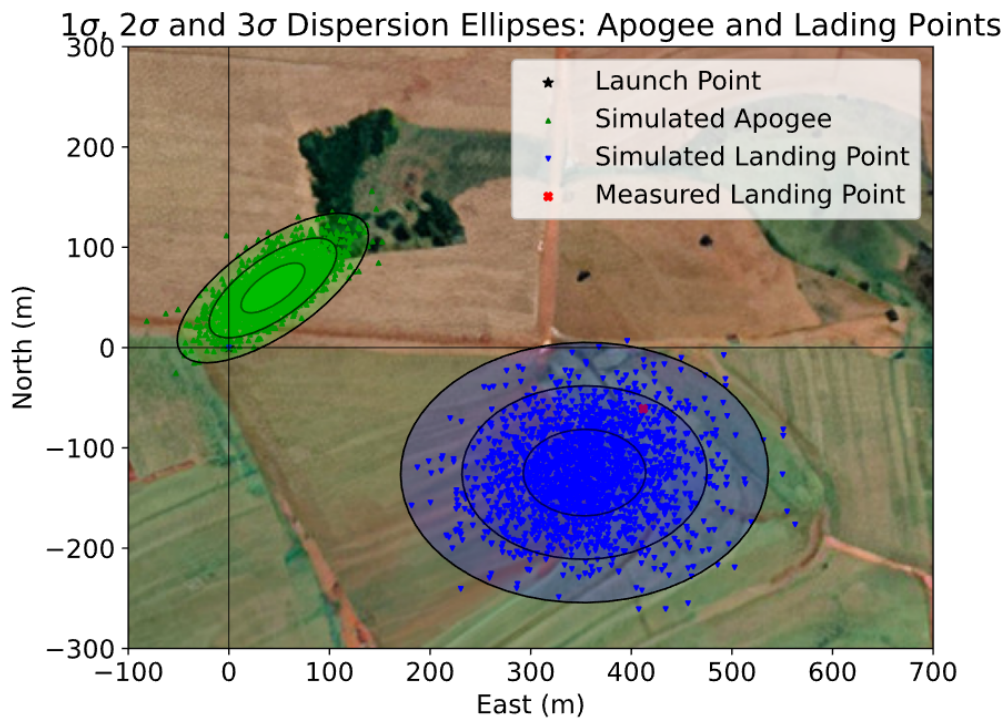

(A)

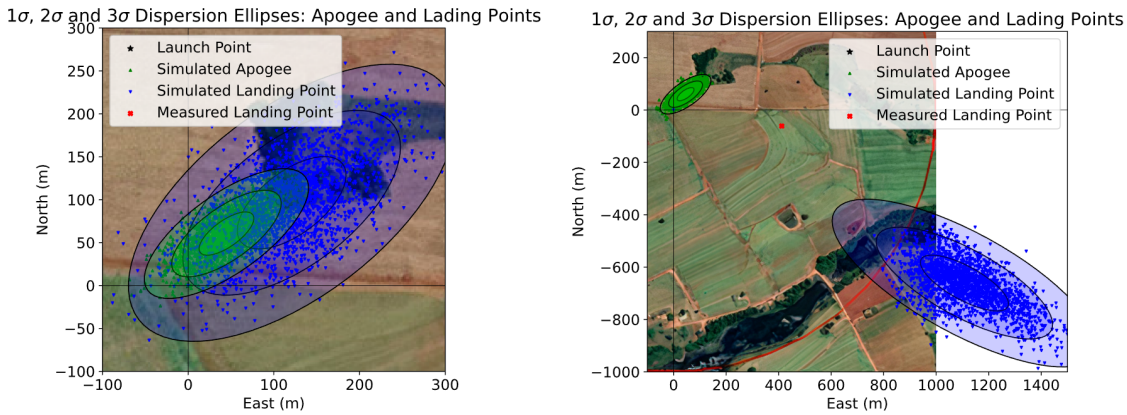

(B) (C)

Figure 27: Dispersion Analysis when A: Launch happens nominally; B: No Chutes Deploy; C: Main Deploys at Apogee

C. Recovery Subsystem

The launch vehicle is single-state and is wholly recoverable by parachutes in a single-bay dual-deployment configuration. The parachutes used are the "IRIS ULTRA STANDARD PARACHUTE" and "ELLIPTICAL PARACHUTE" models by Fruity Chutes made of Ripstop Nylon, with a C_d of 2.2 and 1.6 given by the manufacturer. The drogue and main parachutes are 2 and 6 feet in diameter, respectively. These parachutes are widely used and respected. The deployment system is a standard two-bay deployment, where two parachutes, drogue, and main, are deployed at apogee and at 1,000 ft (by descent), respectively. A drogue parachute is necessary because if the main parachute were solely deployed, then the rocket would drift horizontally hence making the recovery more difficult..

Both the recovery devices will be deployed from a single opening, from the nose, using the drogue chute as a pilot for opening the main chute. This is done by using team-designed tender descenders. Once deployed it'll pyrotechnically cut a line releasing the drogue's link with the rocket and pulling out the main with the drag produced by it. This setup was employed looking at the team's last flight attempt in 2019 where the rocket came down ballistic. To reduce the chance of mechanical failure at tube separation, we decided on a single-bay dual deployment technique.

At apogee, 2 sets of black powder charges (one primary and one backup) eject the nose cone by breaking four M4 nylon bolts and deploying the drogue chute. During this, the main chute comes out while inside its deployment bag, waiting to be released by the tender descender. This event brings down the descent velocity to 75 ft/s.

At 1,000 ft, one of two tender descenders breaks the link between the recovery bulkhead and the drogue line, stretching the main line to release and inflate the main chute. This brings down the descent velocity to 18.8 ft/s.

1. Ejection System

Deployment is done using 4F black powder charges, which when ignited, increase pressure within the parachute bays which breaks the shear pins and facilitates separation. Initial calculations were conducted to determine the proper amounts of black powder necessary for each charge. For the drogue, a charge size of 2.148 g was determined to pressurize the bay to 10 PSI. For the main, as per the original tender descender documents, 1/4th gram or 0.25g of black powder is sufficient to release the pins off the TD. In the event, the initial black powder charges fail, redundant charges with more black powder able to pressurize up to 15 PSI are in place. 10 PSI is considered sufficient pressurization to shear the shear pins and separate the sections of the rocket. 15 PSI is used as a backup that should separate the two sections if an issue arises where the two halves do not separate from the initial charge. Redundant charges that pressurize to 15 PSI were calculated for the drogue parachute bay to be 3.2g. These charges are set in the flight computers to trigger a 2-second delay between them, so as to not conflict with a nominal event.

As of writing this document, drogue and main deployment testing using black powder from Brazilian Commercial vendors have not been conducted. However, the previously calculated black powder amounts will be tested, and any necessary adjustments will be made prior to launch day.

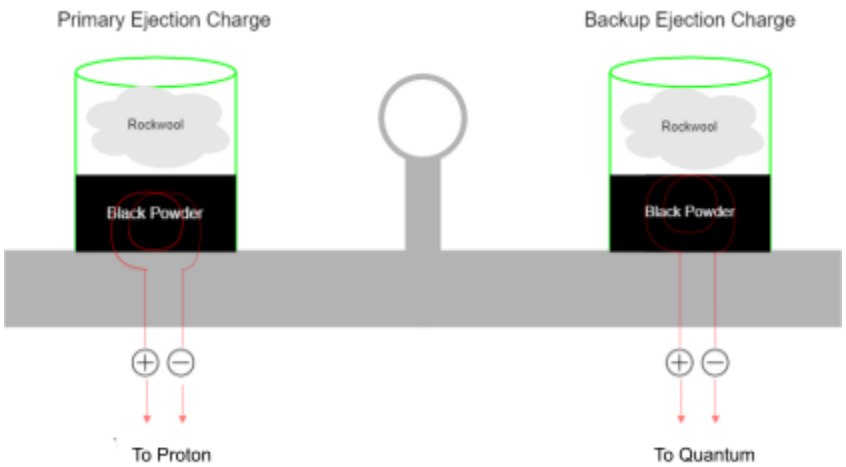

Figure 28: Ejection Charge Cup Placement

2. *Line Cutter*
    a. *Overview*

A pair of team-designed tender descenders, inspired by the original one, was used to break the link between the drogue line and the recovery bulkhead to release the main chute. This line cutter has 2 parts, the base, and the piston. Like the original TD, we fill the reservoir with a small amount of black powder which, when combusted, pushes the pins off the base hence releasing the 2 quick links; effectively cutting the line. Both the base and pistons are made from a single piece of 6061 Aluminium block over a VMC.

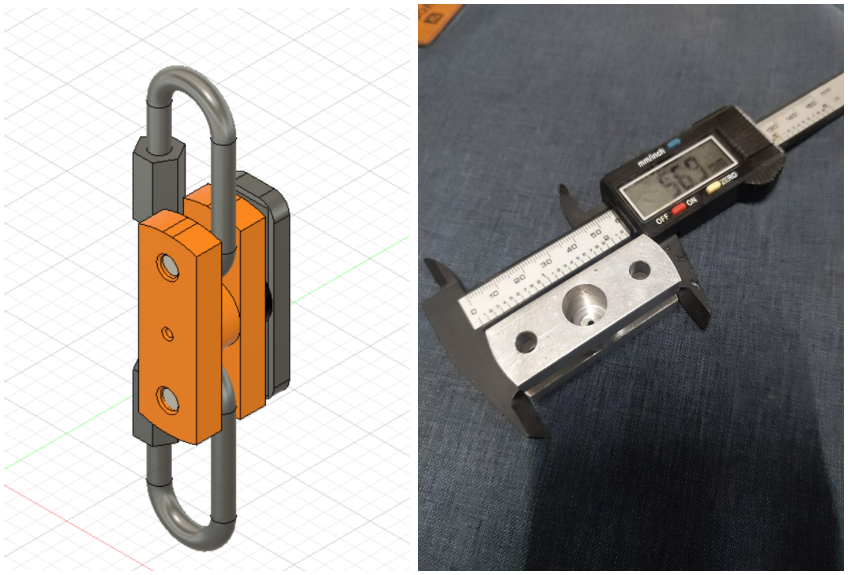

Figure 29: Tender Descender

    b. *Lines Diagram*

To understand the recovery connections and the series of events that take place for main chute deployment, we'll make reference to the lines diagram provided below. In a single bay dual deploy configuration, both the chutes come out from a single opening, where one chute is sized smaller than the other to pull out the bigger one by cutting a reefing line between them. This type of configuration is used to reduce the complexity and risks associated with dual bay dual deploy configuration.

For Midnight Sun, a 2ft diameter Pilot drogue chute is used to initially reduce the descent velocity up to 1,000ft, and then using the drag produced by it, pull out the 6ft diameter main chute. At apogee, the primary and backup altimeters pop the nosecone and all the recovery devices come out of the tube, harnessed inside to the recovery bulkhead with quick links. The drogue is connected to 3 different links: nosecone, main chute connected to recovery bulkhead, and line cutter assembly connected to recovery bulkhead. Shock cords connecting the main chute

are purposefully made longer to allow it to dangle in the air and prevent it from opening prematurely. Line cutter assembly consists of a pair of team-designed tender descenders for each primary and backup altimeter. Tender Descenders are linked such that either one of them could release the pins, it'll cut the drogue line and pull open the main line.

All the shock cords are adequately sized such that the fuselage, nose, or parachutes don't collide with one another. All the recovery hardware is load rated according to their specification as well.

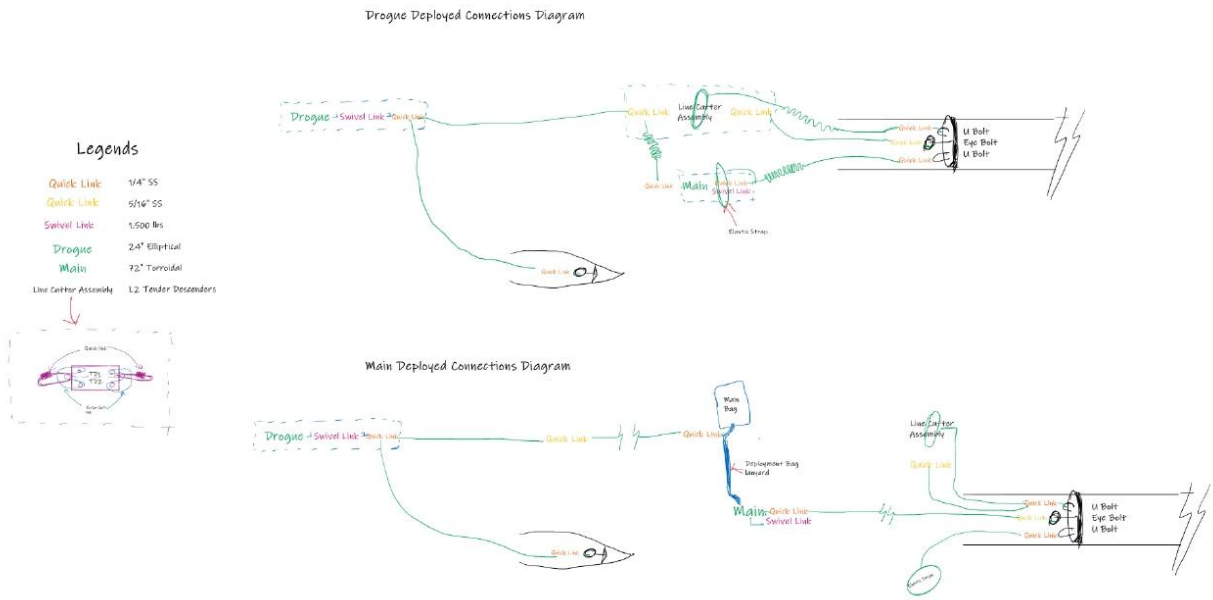

Figure 30: Lines diagram

3. *Hardware*
    a. *Shock Cord*

The shock cords are made of 1" nylon and are 38 ft in total for all the parachutes. Each individual shock cord is 5 times the length of the rocket. The shock cords to be used were selected to have a minimum safety factor of 3 based on prior calculations. The use of a Palomar knot's 0.85 strength percentage calculates the approximate snatch force to be 1,221N or 275 lbs, the shock chords will then have a minimum strength of greater than 825 lbs. All the recovery hardware used is well above the snatch force load rating to sustain such shocks. Every connection between the components required for the safe recovery of the rocket utilizes appropriate swivel link and quick links. All the connections are presented in the table below.

Table 7: Shock cord connections rubric

Shock Cord Designation	**From/To**
Main	Main to Recovery Bulkhead
Drogue	Drogue to Main bag Drogue to Nosecone
Tender Descender	TD to Recovery Bulkhead TD quick link to Recovery Bulkhead TD to Drogue

b. Eyebolts, Quicklinks, and Swivel Links

Quick links were used to attach the shock cords to the eyebolts which were bolted to the bulkheads. The parachutes had a swivel link by which the shock cords were attached to the parachutes. The quick links and swivel links were made of steel.

- Quick Links:
  - ¼" SS with a load rating of 1,000 lbs
    - Quantity: 6
  - 5/16" SS with a load rating of 1,000 lbs
    - Quantity: 3
- Eyebolts:
  - M10 Forged Steel Eyebolts with a load rating of >1000 lbs
    - Quantity: 4
- Swivel Link:
  - 1,500lbs SS Swivel
    - Quantity: 2

c. Recovery Bulkhead

Recovery bulkhead houses the eyebolts, ejection charge cups, and binding comp post terminals to connect ejection charges. It's made of single Aluminium 6061 block on a VMC. These are the bulkheads connecting the parachute to the body tube through an eyebolt, which was designed considering the maximum load, Thus it was assumed force was completely transmitted to the bulkheads. Snatch force (1574 N) due to the opening of the parachute was considered.

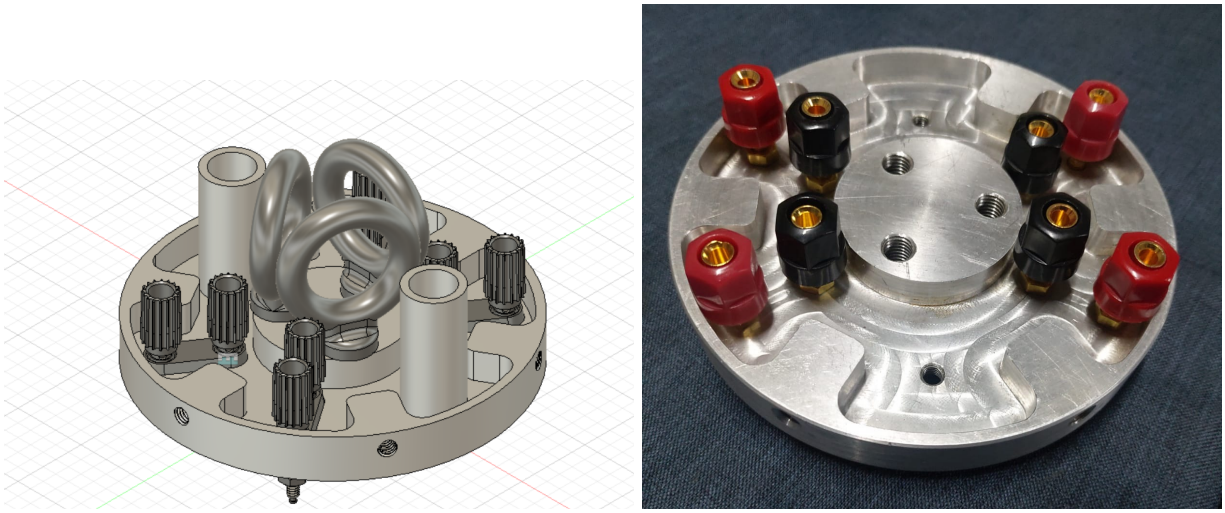

Figure 31: Recovery Bulkhead

d. Safety Factors

The primary structural load on each recovery system is the snatch force on deploying the main parachute, occurring nominally at 1,000ft AGL. The snatch force is estimated by calculating the rocket's descent velocity under the drogue parachute, then using the drag equation with the parachute's full unfurled area and the calculated velocity to calculate the force. Such a calculation assumes that the rocket is unimpeded by air resistance as it falls and that its parachute unfurls instantly, representing a substantial overestimate of the actual snatch force. The calculated force is therefore deemed acceptable for calculating the components' factors of safety. The formulae used & assumptions made to calculate the snatch force are evaluated below using the values in the table below.

Table 8: Snatch force calculation parameters

Quantity	**Identifier**	**Value**
Main parachute diameter	D	$6\ \mathbf{ft}$
Parachute drag coefficient	C_d	2.2
Free-stream density at ground level	ρ_0	$2.38 * 10^{-3}\ \frac{\mathbf{slug}}{\mathbf{ft}^3}$
Drogue descent rate	v	$75\ \frac{\mathbf{ft}}{\mathbf{s}}$

Assumptions:
1. Velocity, weight, and parachute area vectors are parallel
2. Instant Impulse (step input) of shock load upon deployment
3. C_d of parachutes 2.2
4. No energy losses

$$F = \frac{1}{2}AC_d\rho_0 v^2 = \frac{1}{2}\left((D/2)^2\pi\right)C_d\rho_0 v^2 = \frac{1}{2}\left((6\ \mathbf{ft}/2)^2\pi\right)(2.2)\left(2.38 * 10^{-3}\ \frac{\mathbf{slug}}{\mathbf{ft}^3}\right)\left(75\ \frac{\mathbf{ft}}{\mathbf{s}}\right)^2 = 416.374\ \mathbf{lb_f}$$

Table summarizes the ratings and factors of safety:

Table 9: Recovery system factors of safety

Component	**Strength ($\mathbf{lb_f}$)**	**Load ($\mathbf{lb_f}$)**	**Factor**
Main Recovery Harness	4000	416.374	9.606
Drogue Recovery Harness	4000	416.374	9.606
Eyebolt	1300	416.374	3.122
Quick Link	3000	416.374	7.20
Swivel Link	1000	416.374	2.40

D. Avionics

1. Subsystem Overview

The primary function of the avionics subsystem is to trigger the recovery events and track the rocket's location after its touchdown. Additional functions performed by the avionics subsystem include sending data to the ground station and logging experimental flight data for post-flight analysis. For these, three independently powered flight computers, two COTS, and one SRAD unit are used.

The avionics bay houses COTS flight computers, Eggtimer proton, and quantum. Eggtimer proton is our primary computer which is responsible for primary chute deployments charges. The COTS altimeters trigger the recovery events and log flight data like altitude (real-time altitude), velocity(real-time filtered velocity), flight status(various flight phases), temperature(in ℉), and the battery voltage. The drogue gets deployed at apogee and main at 1,000 ft. from ground. Quantum is programmed with a 2-second delay (for primary and secondary computers respectively) to mitigate the risk of components interfering with Midnight Sun's recovery.

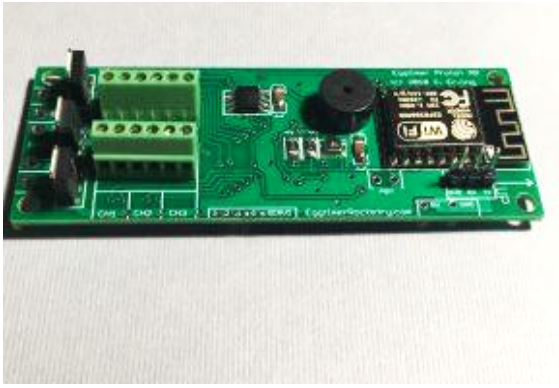

Eggtimer Proton

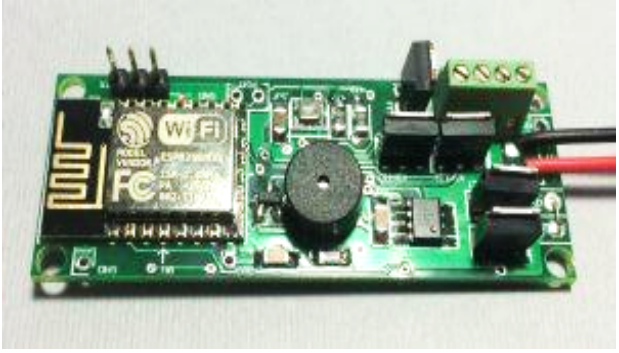

Eggtimer Quantum

Figure 32: COTS Altimeters from Eggtimer Rocketry

2. *Block Diagram and Narrative(SRAD)*

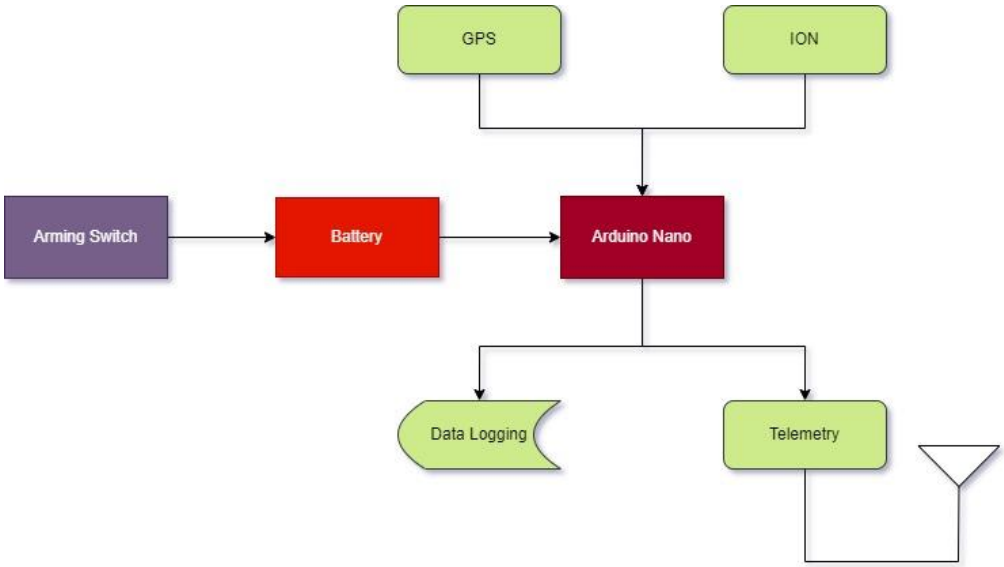

Figure 33: SRAD avionics sub-system

The SRAD Flight computer is a Data acquisition unit, containing an eggtimer ION board and Adafruit Ultimate GPS breakout board, which transmits flight data over 900 MHz radio frequency. The subsystem also logs data locally on an SD card.

3. *Arming and Wiring*

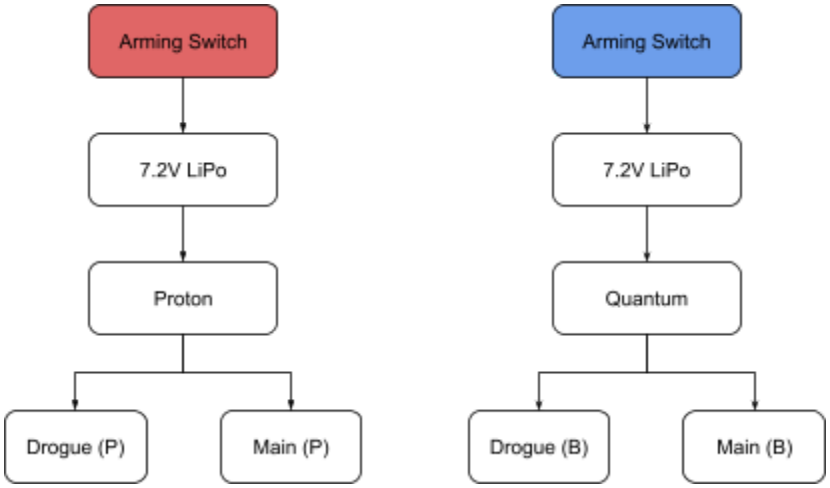

Figure 34: Recovery Connections with altimeters

4. *Apogee Detection Algorithm Description (SRAD)*

Eggtimer ION, a wifi-enabled flight logger, is used here for apogee detection. It has a barometric pressure sensor which is used to estimate the rocket's state during the flight. The barometer measures air pressure and detects changes in it in order to determine the altitude of the rocket. Apogee is detected when the air pressure stops decreasing and begins to increase. The data received through the barometer will be quantized. The sensitivity of the barometer shows how quantized the data will be, but in general, the barometer detects changes in air pressure that are small for a comparatively large change in altitude. After the touchdown detection, it will beep out the attained apogee which makes sure that the flight has successfully logged. We choose Eggtimer ION for apogee detection because of its high accuracy and data logging features.

5. *Data Acquisition*

Data is logged by both COTS and SRAD computers separately. For data acquisition, Eggtimer ION will be used. It will store the data in CSV format. Eggtimer ION was a differentiating factor to us as it gives accurate and non-repetitive data. This data received from Eggtimer ION is transmitted through XBee PRO S3B as explained in Ground Station. In COTS, we used Egg Timer Proton and Quantum which will log the data continuously and save it in its memory that will be used for post-flight analysis.

Figure 35: Eggtimer ION WiFi-Enabled Flight Logging Altimeter

6. *Telemetry*

The data acquired from Eggtimer ION is transmitted using SRAD avionics. For data transmission, we will be using two XBee PRO S3B modules, one in the avionics bay and the other at Ground Station. The XBee module located in the avionics bay uses an omnidirectional antenna for data transmission to the other XBee module on the Ground Station which uses a Yagi Uda antenna as a receiver. The data will be sent in the packets with the start byte, data, and stop byte at a particular frequency to avoid interference.

7. *Arming and Power Delivery*

Dual redundancy of the recovery electronics is achieved through the use of two independent eggtimer flight computers. Each eggtimer board has its own battery and push-button arming switch, completely independent, so any failure in one of the components only results in a failure of a single altimeter. Additional redundancy is achieved because the output channel of a single altimeter is passed through two cables instead of one, so a failure of a single cable still allows for both altimeters to have successful deployments.

E. Ground Station

Ground station is the telemetry platform to view and analyze real-time flight data. In ground station, we are using two XBee-PRO modules. One of the XBee modules(coordinator) will be present in the avionics bay for transmission and the other XBee(Router) will receive the data at the ground station. Data transmission will occur at the frequency of 900 MHz. These modules are configured using the XCTU software in API mode.

Flight data from the ION flight computer and GPS is sent through Arduino nano which is connected to the coordinator. This data will be transmitted to the ground station from the coordinator to the router.

The telemetry data format of the ION flight computer consists of various data elements. Data is streamed out by the ION flight computer at two-second intervals. The data that is sent out depends on the flight phase. The data stream is ASCII, in the following format:

Trigger byte – a single ASCII byte that specifies what kind of data this is
Data – 1 to 8 bytes of ASCII data, depending on the data type
Terminator byte – always an ASCII ">" character

This data includes latitude, longitude, altitude from the GPS and data elements like flight time, altitude, velocity, acceleration, flight status, temperature, battery voltage, apogee, maximum velocity and maximum acceleration from the ION flight computer. This data is first appended in an array which is formed according to the API frame format. This array is transmitted by the coordinator via an omnidirectional antenna directly connected to it.

Fig 36: XBEE PRO S3B

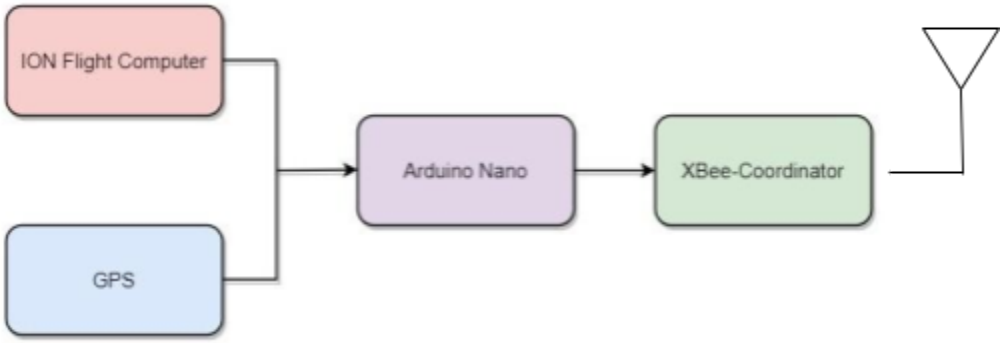

Figure 37: SRAD flight computer data transmission

Data is received by a high-gain Yagi Uda Antenna connected to the ground station router. When a packet is received at the ground station, a touchdown status will be displayed on the ground station monitor. The received packets are then stored in the influx database which is linked to XBee with the help of the Node-Red platform. Node-RED creates functionality by wiring together flows of data between nodes(XBee and influx database). The data stored in the database will be interpreted with the help of Grafana.

Grafana displays this data in the form of visualizations and dashboards. This will include graphs(Altitude vs Time, Velocity vs Time) and other visualizations of location coordinates, maps, and battery voltage.

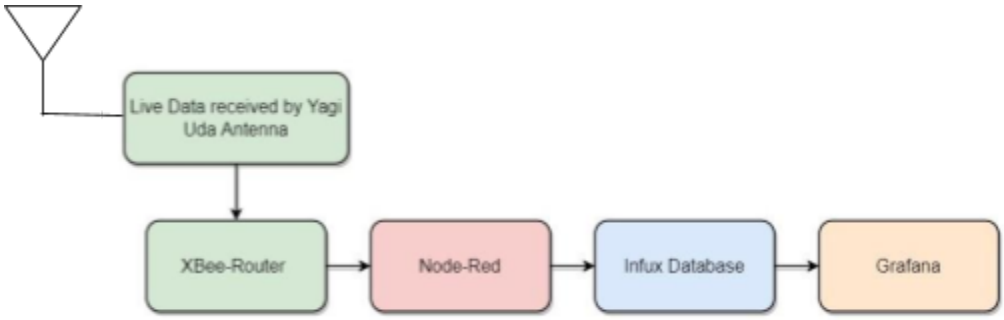

Figure 38: Ground Station Tech stack and hardware setup for reception

F. Payload

1. *Introduction*

Tracking attitude, orientation, and trajectory is a crucial part of flight of the rocket. Using the Global Positioning System (GPS) to track the position of the rocket can be a good option. But during the flight of a rocket, there's a point where the acceleration of the rocket surpasses the CoCom Limits (Coordinating Committee for Multilateral Export Controls) of GPS sensor and as a result it gets difficult to track the position of the rocket. To overcome this problem, we're developing a dead reckoning solution for a GPS-denied environment using the 6-degrees of freedom Inertial Measurement Unit (IMU) which contains a 3-axis accelerometer and 3-axis gyroscope and a barometric sensor. Unfortunately due to nature and fabrication of the IMU units, their measurements are noisy and have varying DC offsets. To deal with this problem, a simplistic linear Kalman filter is used to remove noisy acceleration data only in the Z-axis. Using the data from Y and X axis of IMU, we use a mathematical model which predicts rocket's position estimate and integrating this with the Z axis data along with the pressure reading, we can get accurate position estimate in 3 dimensions. Also to avoid gimbal lock and reduce time and space complexity of processing, the implementation of quaternion will be considered instead of euler angles.

2. *Methodology*

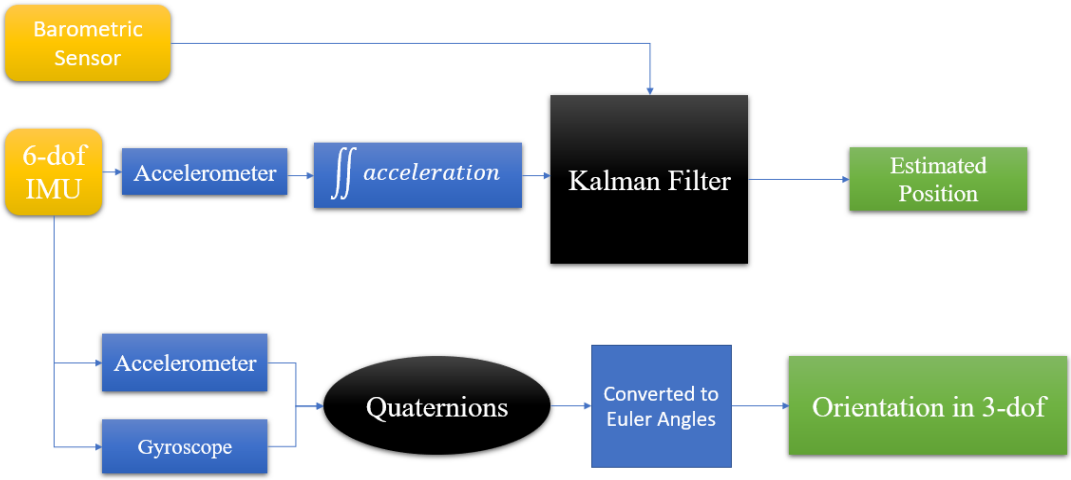

Figure 39: Dead Reckoning Solution Flowchart

The 6-dof IMU sensor used is MPU6050 which is connected to an Arduino Nano. All the data received using Arduino is logged to a micro-SD card using a data logger module also connected to Arduino Nano. During the time of flight, the acceleration data is integrated twice on board to get position estimates which are then logged onto a micro-SD card. A linear mathematical model is used inside the Kalman filter which predicts the position values for the next time stamp. The values coming from the sensor and the predicted values are combined together using Kalman gain to calculate the current position estimate.

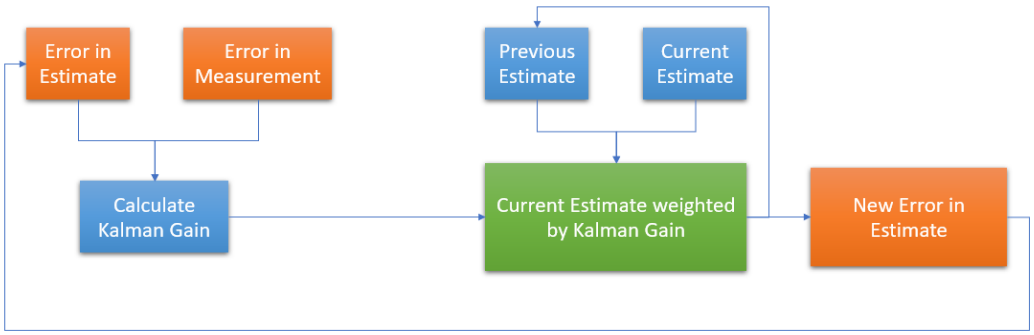

Figure 40: Working of Linear Kalman Filter

III.Mission Concept of Operations and Overview

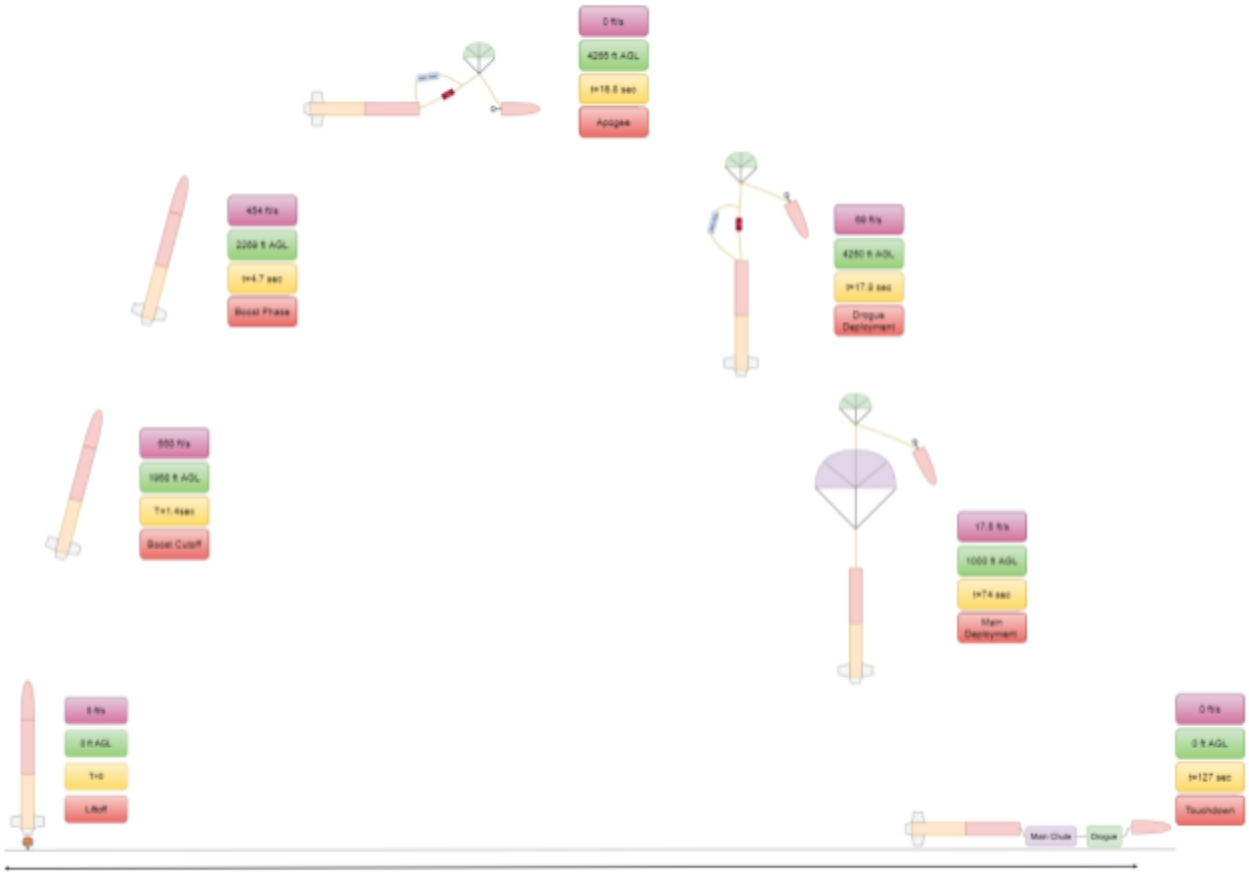

Figure 41: Mission CONOPS

Table 10: Rocket flight Phases

Phase	Start of Phase	End of Phase
Rocket assembly	Rocket components are separate	Rocket is ready to arm for launch
Pad operations	Rocket is ready to arm	Rocket is armed on pad
Avionics activated	Rocket is armed on pad	Telemetry packets started receiving, GPS lock confirmed
Ignition	All personnel are at a safe distance	Rocket motor ignited
Boost	Rocket motor ignited	Rocket motor burned out
Cruise	Rocket has stopped accelerating	Apogee is reached
Drogue deploys	Apogee reached	Payload out of sabot / drogue unfurled
Rocket descent (drogue)	Drogue unfurled	Main deploys
Rocket descent (main)	Main parachute deploys	Rocket lands
Rocket Recovery	Rocket landed	Rocket recovered with no active energetics

IV.Conclusion and Lesson Learned

1. Technical Lessons Learned

a. Reliability and Simplicity

The underlying principles of every design are to maintain, whenever possible, a system that is both simple and reliable. There are a number of factors that lead into these philosophies; other than being generally good engineering principles, they are even more applicable to a group of students who are attempting to build naturally complex series of integrated systems in a relatively short time frame. Simple systems are easier to design, easier to troubleshoot, and easier to learn - which is especially important on a team with a high turnover rate, as we continue to both gain new members and lose alumni every year. Simplicity is prerequisite to reliability. Indian teams such as ours don't usually get a lot of opportunities to launch a rocket and the one that we grab hold is at competitions overseas. It is important to design systems that will work in unfamiliar conditions and circumstances, and that we can trust to get us in the air and bring us down safely.

b. Training Procedure

One thing that became evident during the pandemic was the importance of proper training procedures. In order for new members to succeed at the technical challenges presented to them in the process of developing a rocket, it is important to provide them with the technical foundation required to start learning on their own. The team runs regular training sessions for skills such as fundamentals of rocket design, PCB design and fabrication, and use of software like GitHub, Eagle and Fusion360. Providing a simple way for team members to learn these skills has proven to be a great benefit to the team, as the team members have carried and extended these skills into the projects that they develop.

2. Team Management and Operational Lessons Learned

a. The Importance of Documentation and Knowledge Transfer

Although STES Rocketry has existed for over 5 years, the proper documentation of our systems is a relatively new development. In the past most knowledge on the team was gained through hands-on experience, and a lot of the time older members would teach newer members about the rocket's projects through in person conversations and messages on WhatsApp. The logic was to build the rocket first, and write about it later. In hindsight this was flawed,

and there were ways to do both, but it was easy to justify under the pressure of deadlines and trying to make it to a launch opportunity. Then the pandemic happened, and all of a sudden the team couldn't rely on in person explanations of systems. We struggled to onboard new members without extensive hardware, in-person training, and tests to show them. What was once easy to push to the side was staring us in the face, and it didn't appear to be going away anytime soon: our documentation was severely lacking. The issues were only compounded with the graduation of 2 classes between the start of the lockdown and the full return to in person activities; many of our older members left the team without being able to fully hand off their knowledge. It was evident that change was required.

Over the past 3 years, led in many ways by our new members, the team has implemented a number of strategies to document and better analyze the systems we build. Design documents for each project outline the goals, requirements and design choices. Tests are summarized in post-test documents on nuclino, and the analysis of anomalies is recorded more easily for future reference. Reports, such as this one, are given more time and care in an effort to compile a complete, detailed insight to the rocket and its supporting infrastructure. There is still more to be done, but the change is evident. We have determined not to lose sight of our goals and motivations during the pandemic, and proper documentation and knowledge transfer will help us continue to ensure that we will not lose out on members because we did not have enough information regarding a subsystem

b. Management of Team Growth and the Importance of In-Person Engineering Experience

Over the past couple of years, the team has grown steadily, and is now at over 30 people. As the primary goal of the team is to provide interesting opportunities and experiences to anyone who'd like to participate, this growth is certainly welcome. However, learning how to manage a growing number of team members, projects, and resources has been a challenge unto itself. In some ways, the extended design cycle that has arisen from Competition rockets being delayed has presented new opportunities to the team that may have otherwise been too complicated or time consuming for a 1-year design cycle. We have been able to simultaneously develop a more complex version of the KNSB motor which we have been iterating on for the past 2 years, as well as begin development of a higher height target rocket with same SRAD motor, with hopes to fly in 2023

While remote, the team struggled to find work for the many new students joining university for the first time, wanting to get involved with design teams. We added a number of design projects to our scope in order to continue to produce work while being unable to have full access to our manufacturing and testing equipment and facilities. This means that the return to in person work has provided many tasks for new members, and the management of the large number of people on the team has begun to feel more natural, and in many ways simpler. There is interesting work to be done, and there are interested people to do it. We have been able to show up close how our systems function and fit together; how and why they are designed and built and tested. Having more older team members around the bay consistently has lent itself well to the training of the next generation of the team, and the future looks bright.

V. Appendix

Appendix A
SYSTEM WEIGHTS, MEASURES, AND PERFORMANCE DATA

Table 11: Rocket Parameters

Specification	Value	Target	Units
Airframe Length	2300	-	mm
Airframe Diameter	124	124	mm
Fin-span	120	-	mm
Dry Mass	10.168	-	kg
Propellant Weight	2.147	-	kg
Payload Weight	3	>0.8	kg
Wet Mass	15.315	-	kg
Number of Stages	1	1	-
Propulsion Manufacturer	STES	-	-

Table 12: Flight Parameters

Specification	Value	Target	Units
Simulation Software	OpenRocket	-	-
Launch Rail Length	6	-	m
Launch Angle	2	-	degrees
Lift-Off Thrust to Weight Ratio	12.53	>5	-
Launch Rail Departure Velocity	36.4	30	m/s
Minimum Static Margin	2.73	>1.5	-
Maximum Acceleration	145	-	m/s^2
Maximum Velocity	166	-	m/s
Maximum Mach Number	0.5	-	-
Predicted Apogee	1148		m

Table 13: Propulsion Parameters

Propulsion Type	Solid
Manufacturer	STES (SRAD)
Casing Size	60mm x 747mm
Class	L
Type	L1882
Total Impulse (N-sec)	2595

Peak Thrust (N)	2
Average Thrust (N)	1068.6
Burn time (sec)	1.35
Loaded Weight (kg)	3.579
Propellant Weight (kg)	2.417

Table 14: Drogue Parachute Recovery Summary

Drogue Parachute Diameter (ft)	2
Drogue Parachute Drag Coefficient	1.6
Decent Velocity (ft/sec)	75
Deployment velocity (ft/sec)	6.56
Deployment acceleration (ft/sec^2)	30.59
Deployment velocity with 2 second delay (ft/sec)	63.97
Deployment acceleration with 2 second delay (ft/sec^2)	18.43
Shock load (lb)	33.64
Shock load with 5 second delay (lb)	38.2

Table 15: Main Parachute Recovery Summary

Main Parachute Diameter (ft)	6
Main Parachute Drag Coefficient	2.2
Decent velocity (ft/sec)	19.2
Deployment velocity (ft/sec)	723
Deployment acceleration (ft/sec^2)	425
Shock load (lb)	416.374

Table 16: Main Parachute Shock Cord Specifications

Material	Nylon
Length (ft)	20
Width (in)	1

Thickness (in)	1(tubular)
Breaking Load (lb)	4000

Table 17: Drogue Parachute Shock Cord Specifications

Material	Nylon
Length (ft)	18
Width (in)	1
Thickness (in)	1(tubular)
Breaking Load (lb)	4000

Table 18: Black Powder Specifications

Type	FFFF
Drogue Mass (g)	2.148
Main Mass (g)	0.25 (TD)
Drogue Backup (g)	3.2
Main Backup (g)	0.25 (TD)

Table 19: Shear Pin Specifications

Material	Size	Shear Strength
Nylon	M4	143 $\mathbf{lb_f}$

Appendix B
HAZARD ANALYSIS APPENDIX

THIS PAGE IS INTENTIONALLY LEFT BLANK.

#	Hazard	Cause(s)	Effect(s)	Probability of Occurrence (1-5) & Rationale	Personnel Severity (0-5) & Rationale	Equipment Severity (1-5) & Rationale	Personnel Risk Index (Probability * Severity)	Equipment Risk Index (Probability * Severity)	Acceptable?	Mitigation Plan	Personnel Severity (0-5) With Mitigation Plan	Equipment Severity (1-5) With Mitigation Plan
				2	4	4						
1	Solid motor ignites during transportation to the launch site	Igniter is left in the motor during transport, and igniter comes into contact with a battery; fire in the car	Motor emits hot exhaust gases and flame; risk of burning equipment and people	The solid motor must come into direct contact with an active ignition source in order for this event to occur. Which is unlikely in this case as the motor will be kept under sufficient protection shielding it from external ignition sources.	Severe burns due to exhaust gases likely; exhaust gases will expand to area around motor, so large hazard area	Motor exhaust gases can burn, melt, or otherwise thermally damage nearby equipment in the pickup truck bed or trailer bed	8	8	Acceptable upon completion of quality assurance review	Motor used for the rocket will be bought on-site at the launch, rather than transported by STES team members, which removes this failure mode from the team's operations. In addition, the ignitor will not be introduced inside the motor until the rocket is installed properly on the launch rod thereby mitigating any chance of accidental ignition.	0	1
				2	5	5						
2	Solid motor ignites during assembly of the rocket	Ignition sources (ex. ignitiers, batteries, flammable chemicals, lighters, live wires) present near the rocket assembly table come into contact with the motor's fuel grain	Hot, high-pressure exhaust gases from motor can damage equipment and hurt team members; if motor is loaded into rocket's motor mount, the rocket could shoot forward at high velocity and injure people downrange	The solid motor must come into direct contact with an active ignition source in order for this event to occur. Which is unlikely in this case as the motor will be kept under sufficient protection shielding it from external ignition sources.	Exhaust gas will severely injure any team members assembling the rocket; people downrange of the rocket will be severely injured if the rocket impacts them	The gas and flame emitted from motor could burn and deform other necessary rocket components	10	10	Acceptable upon completion of quality assurance review	All possible ignition sources will be removed from the table where the rocket is assembled; integrating the motor with the rocket's motor mount is on of the the last steps in the assembly procedure; igniter won't be inserted into the motor until the rocket is mounted on the launch rail	1	1
				3	4	5						
3	Solid motor fuel grains ignites during assembly of motor	Ignition sources (ex. ignitiers, batteries, flammable chemicals, lighters, live wires) present near the rocket assembly table come into contact with the motor's fuel grain	Hot, high-pressure exhaust gases from motor can damage equipment and hurt team members.	The solid motor must come into direct contact with an active ignition source in order for this event to occur. This is more likely in this case as the motor will not be shielded from any external ignition sources until it is installed properly in the rocket.	Exhaust gas will severely injure any team members assembling the motor	Motor will be unusable if the fuel grain is ignited and spent before the flight	12	15	Undesirable: Written and reviewed decision required to proceed	All possible ignition sources will be removed from the table where the motor is being assembled. In addition, the grain will be stored inside cardboard containers and away from any sources of heat to make sure that the internal temperature of the grain remain optimal and it doesn't catch fire.	1	1
				2	3	5						
4	Solid motor fuel grain damaged, cracked or crushed during assembly of motor	Heavy equipment or tools are dropped on the motor fuel grains while the motor is being assembled; motor fuel grains are dropped from a large height; motor fuel grains are damaged while being inserted into motor	Fuel grains can no longer be used in the motor; possibility of propellant fragments or powder being ejected from the motor to the assembly area, which poses a fire hazard	Nature of motor assembly demands direct handling of fuel grains. Therefore if carefully not handled, then the hazard could occur resulting in catastrophic failure. However, it is less likely to occur if members are trained in handling the motor and its grains properly.	Fragments of solid propellant are a fire risk to the team members if not immediately located and cleaned up	Motor will be unusable if the fuel grain is damaged	6	10	Acceptable upon completion of quality assurance review	Motor will be assembled on a table clear of any heavy objects that can damage the fuel grains; STES members will assemble the motor carefully to so the grains aren't dropped or otherwise impacted with a large force	1	1
				1	4	3						

5	Black powder ignites during transportation to launch site	Ignition sources (ex. igniters, batteries, flammable chemicals, lighters, live wires) are stored with the black powder during transportation and ignite	Black powder capsules explodes; can injure team members nearby or damage equipment being transported near the black powder container	Under existing safety regulations, ignition sources are never stored with the black powder during transportation. Hence, this event is less likely to occur.	Exploding black powder capsules will injure any team members if transported near people.	Black powder will be wasted before the launch; exploding black powder capsules could damage nearby equipment due to concussive force of the explosion	4	3	Acceptable without review	Black powder charges in the rocket itself won't be loaded with black powder until the final assembly; black powder is transported to the launch site in small, separate, sealed capsules to minimize the chance and magnitude of an accidental explosion; these capsules will be attached to the site of a vented container so an accidental explosion can be safely controlled	1	1
				1	4	4						
6	Altimeters trigger ignition of the black powder charges during assembly of the rocket	Altimeters are prematurely attached to the wire leads of the black powder charges; altimeters are turned on and a sudden pressure decrease or an altimeter malfunction causes the ignition signal to be sent pre-flight	Black powder capsules explodes; force and hot gases from explosion will injure team members assembling the rocket; explosion could launch a segment of the airframe or a coupler away from the rocket at high speed injuring anyone downrange	Pre-launch procedures dictate that the rocket's avionics systems won't be turned on until the rocket is mounted on the launch rail reducing the probability likelihood of this event occuring.	Exploding recovery charges will eject hot gas, airframe segments and coupler at high speeds will injure any team members in the way.	Recovery system charges will have to be replaced; possible damage to parachutes, shock cords, avionics bay and payload.	4	4	Acceptable without review	All avionics switches will be turned off until the rocket is mounted on the launch pad to stop any false ignition signals due to electronics malfunctions. In addition, wire leads leading to the black powder charge will not be connected to any electronics systems thereby mitigating any chance of accidental ignition.	1	1
				2	5	4						
7	Black powder used for recovery system charges ignites while being loaded into the charge capsules on the rocket	Ignition sources (ex. igniters, batteries, flammable chemicals, lighters, live wires) are stored black powder charges during rocket assembly	Black powder ignites fuel grains, resulting in the rocket firing prematurely which could cause damage to the members and other equipment	Assembly procedures require that all ignition sources are removed from the assembly area when the black powder is poured into the charge capsules thereby reducing the probability of occurence.	Black powder container will be in the hands of any team members while loading so accidental ignition will cause severe bums or tissue damage to fingers and hands.	Black powder explosion will release hot gas that could damage the airframe, parachutes, shock cords, avionics bay or payload of the rocket	10	8	Acceptable upon completion of quality assurance review	Loading black powder into the recovery system's capsules will be the last step of the assembly procedure; black powder will be loaded on a table clear of any possible ignition sources by a trained STES member	2	1
				2	3	5						
8	Rocket airframe crushed by other equipment during transportation to launch site	Equipment not secured properly within rocket or truck bed, rough terrain during transportation	Unable to use airframe, resulting in inability to participate in competition	Rocket airframe will be secured in-place inside the transportation vehicle and will be packed away from any heavy equipment that could damage it to reduce any accidental damage.	Crushed or cracked carbon fiber composite tubes will expose raw carbon fiber and release microfibers into the air, which can irritate skin and respiratory passage without proper protective equipment	Rocket airframe would be unusable and the rocket could not be launched at the competition	6	10	Acceptable upon completion of quality assurance review	The rocket airframe and all other fragile components will be stored with utmost security so as to ensure that no accidental damage happens to any such parts. Preferably, all such parts will be transported seperately in a different vehicle with trained members for avoiding any kind of mishap	0	2
				2	0	4						
9	Forgetting necessary equipment	Lack of preparation	Unable to participate in competition	Equipment checklists will be prepared pre-departure to verify that all parts and equipments are accounted for to reduce the probability of such an event occuring.	Lack of equipments does not pose a direct hazard to the health and safety of any team members	Missing equipment will render the rocket unusable unless replacement tools or components can be found	0	8	Acceptable upon completion of quality assurance review	An extremely detailed SOP with the list of materials will be followed. It will be checked at least two times i.e. before and after every loading/unloading. This will also ensure that any missing parts or equipment is taken into account so the required actions can be carried out as soon as possible.	0	1
				1	0	5						

10	Equipment falls out of vehicle while under way to launch site	Equipment not properly secured to truck bed	Unable to participate in competition	Equipment will be restrained with ratchet straps or placed in secured container, so these security measures will have to fail for anything to fall out	Equipment falling out of the vehicle does not pose a direct hazard to the health and safety of any team members.	Any equipment that falls out of the vehicle will likely be damaged beyond repair and could damage other vehicles on the road	0	5	Acceptable without review	Any and all equipments stored will be strapped firmly to the transportation vehicle and checked for any loose ends by "tugging". Any and all loose ends will be secured before transportation as well as a trained team member will be in close contact with the equipment ensuring no failures during transportation occurs.	0	1
				1	1	5						
11	Theft of equipment	Equipment not properly secured and locked in truck bed and rocket trunk	Unable to participate in competition due to lack of necessary equipment	Equipment and the vehicle will be secured against theft; vehicles will only stop at predetermined safe rest locations	Equipment theft does not pose a direct hazard to the health and safety of any team members.	Necessary equipment will be missing, which will prevent participation in the competition unless it is replaced	1	5	Acceptable without review	All of the equipment whether expensive or cheap will be stored securely under trunks with locks on them which will be known only to the team members. All team members will be advised to put away any used or unused equipment safely in the storage devices. And finally, the containers will be covered and kept an eye on constantly to make sure no theft or any such unfortunate events occur.	1	3
				5	4	1						
12	Dehydration while team searches for rocket after launch or while assembling the rocket	Not bringing sufficient quantity of water, extended exposure to extreme heat	Discomfort of team members	Extreme desert temperatures mean dehydration is likely, though sun safety measures and adequate hydration will act as safeguards (see Mitigation plan)	Dehydration can cause long-term health problems for any team members if it left untreated and prevent them from participating in the competition	Dehydration does not pose a direct hazard to any equipment however, the team members efficiency maybe reduced and misuse of equipment can occur.	20	3	Unacceptable: Needs to be mitigated compulsorily	Team members will bring hats, sunglasses and sunscreen. They will also assemble two pop-up canopies at the launch site to provide shade and bring two 10-gallon coolers filled with bottled water to ensure hydration	2	1
				5	5	1						
13	Heat stroke while team searches for rocket after launch	Not bringing sufficient quantity of water, extended exposure to extreme heat	Possible illness or death of team members	Extreme desert temperatures make heat stroke likely, though less likely than dehydration; sun safety measures and adequate hydration will act as safeguards (see Mitigation plan)	Heat stroke severely injure any team members if left untreated, and will prevent them from participating in the competition	Heat strokes do not pose a direct hazard to any equipment however, the team members efficiency maybe reduced and misuse of equipment can occur.	25	2	Unacceptable: Needs to be mitigated compulsorily	Team members will bring hats, sunglasses and sunscreen. They will also assemble two pop-up canopies at the launch site to provide shade and bring two 10-gallon coolers filled with bottled water to ensure hydration	3	1

HAZARD INDEXING MATRIX						
		PROBABILITY OF OCCURENCE				
		1	2	3	4	5
SEVERITY	1	1	2	3	4	5
	2	2	4	6	8	10
	3	3	6	9	12	15
	4	4	8	12	16	20
	5	5	10	15	20	25

KEY:	
19-25	Unacceptable: Needs to be mitigated compulsorily
14-18	Undesirable: Written and reviewed decision required to proceed
6-13	Acceptable upon completion of quality assurance review
1-5	Acceptable without review

Appendix C
RISK ASSESSMENT

THIS PAGE IS INTENTIONALLY LEFT BLANK.

ID	Phase	Risk	Causes	Probability	Consequences	Severity	Mitigation
1	Pre Competition	Failure to complete tasks due to time conflicts with other tasks relating to university & works etc.	Lack of communication between team-leads and between general members and team leads. The task might also be too ambitions	4	5	20	Communicate with everyone and take in consideration the available time of each member of the team; clearly split the tasks and assign the hard deadlines; constantly verify that the task is being performed; try to find additional skillful people to help if needed; asses the difficulty of the task and consider spending time on finding an easier solution.
2	Pre Competition	Mistakes on subsystem level due to miscommunication	Inadequate leadership of the team-leader. Sub-team members are either divided by a geographical or language barrier.	4	4	16	During the weekly lead-meetings discuss and verify the work on subsystems; have one responsible person for each issue. Peer review as much as possible. Insure that most of the team members speak english and are located on the university grounds most of the week.
3	Assembling	Loose wires prevent smooth assembly	Many wires have to be connected internally and space is limited	4	4	16	Wires can get tangled with other parts -> proper assembly checklist needed; make additional incisions for easier removal and wiring; inspect wiring upon every usage, and before storing. Taylor design to avoid such problems. Use good quality connectors.
4	Pre Competition	Team split between tasks	Team members ambition to achieve the perfect rocket.	3	4	12	Prioritize the tasks; assign the team members to focus completely on the highest priority ones; terminate infeasible objective; discuss compromised objectives at team meetings.
5	Pre Competition	Mistakes at interface due to miscommunication	Inadequate leadership of the system engineering team.	3	4	12	Interface are under the responsibility of a single members of the system engineering team. Critical interfaces are discussed weekly with the team leaders.
6	Global	Team conflicts due to the organisation decisions	Chain of command not well established. Decisions were taken without considering all stakeholders. Lack of good leadership.	4	3	12	Clear structure; identify and communicate the priority tasks clearly; Tasks that concern competition rocket receive the highest priority; the team's primary focus is to make a successful rocket for the competition
7	Pre Competition	Lack of money to complete the objectives	Too little effort put into publicizing the project or too little interest on the industry's side in our activities	2	5	10	Concentrate more efforts in sponsoring and PR by establishing a strong sponsoring team with reliable members. Profit from EVE's help in this domain.
8	Pre Competition	Person injuries during fabrication, launch, testing	Lack of adequate procedures and non-compliance with local legislations or safety regulations.	2	5	10	Ensure compliance with safety regulations, keeping safe distance, having checklist to prevent improper handling.
9	Pre Competition	Unexpected environmental conditions affect simulation results	Wind, temperature or atmospheric pressure exceed the range of expected values in the simulations	3	3	9	Determine the apogee for large range of values; Experiment with different trim weights to compensate. Determine range of atmospheric values that insure apogee can be reached with adequate control.
10	Pre Competition	Exceeding the mass margin for the selected engine	Another engine has to be used than the one initially selected.	3	3	9	Weighing each component to precisely determine its mass; Take a system and subsystems level margins to account for uncertainty, Have a plan where a mass could be decreased if necessary
11	Launch	Instability due to asymmetric mass distribution	Inner systems were designed asymmetrically to accommodate heavy/bulky elements (eg. Batteries).	3	3	9	Design such that the weight distribution is as symmetrical as possible. Design an interchangeable fin system so the stability margin can be tailored late in the rocket construction. Check stability through simulation.

12	Pre Competition	People having unexpected projects	Personal lack of time or lack of interest.	2	4	8	Clearly identify reliable members based on their availabilities, demonstration of personal investment and initiative. Exclude unreliable people.
13	Pre Competition	Inadequate working force (in any SS)	Too little effort was invested into finding the adequate peoples. The objectives are too ambitious. Team member's experience is inadequate.	2	4	8	Clearly prioritize the tasks and make sure that mission critical ones have enough peoples working on them; Try to recruit additional working force for the remaining (second-order) tasks; identify the feasible objectives and terminate or relax them.
14	Pre Competition	Exceeding the budget contingencies taken on subsystem level	Unexpected system features in multiple systems were implemented after the budget were established. Some features were much more complex than expected.	2	4	8	Designing the subsystems with allocated with allocated weight and power consumption in mind; Weighing nd verifying the weight for an many components as possible as well as maintaining rigorous budgets for mass, power and money.
15	Pre Competition	Minor damage on a test launch	Rocket behaves differently than expected (eg. Descent speed). Some functions didn't work properly (eg. Un-reefing).	4	2	8	Analyze and identify most probable things that can fail, plan the repairment accordingly. Fins and boattail are the most likely to fail, make them interchangeable.
16	Pre Competition	Stability: Bad CP from simulation	Error in rocket definition in commercial rocket simulation program (OR or RS).	1	5	5	Check by hand using Barrowman method.
17	Pre Competition	Stability: Bad CM from simulation	Error in rocket definition in commercial rocket simulation program (OR or RS) or because of incomplete CAD.	1	5	5	If weight margins allow for it, plan locations for trim weights.

Operation Risks

ID	Phase	Risk	Causes	Probability	Consequences	Severity	Mitigation
1	Assembly	Not enough time	A part is broken shortly before the assembly period. Team members aren't coordinated. Stress induces errors.	4	5	20	Assembly checklists; assign duties for each for each team members to avoid confusion.
2	Recovery	Parachute entangles	The folding of the parachute wasn't done according to procedure. Shock cords and lines get tangles in the rocket.	4	5	20	Write standard folding procedure. Always have parachute folded by the same person. Put parachute in deployment bag.
3	Seperation	No separation	Cone is too tightly fitted to airframe. Ejection charge is not strong enough or pressure leaks through recovery bulkhead.	4	5	20	Several separation tests in different rocket positions, including shake test and test flight.

4	Seperation	No deployment of parachute	Parachute is struck in the rocket by protruding structural elements. It is tangled with it's own cord or other parts of the rocket.	4	5	20	Use an ejection ConOps which reduces the risk of entanglement to a minimum. Do ejection tests with payload.
	Line Cutter	No separation of line cutter	Pyro channels didn't have continuity	3	5	15	Do a proper tug test during assembly to ensure proper connections
5	Flight	Signal lost- Rocket untraceable	Rocket runs of power during flight, lands behind a terrain feature which obstructs the signal or crashes.	3	4	12	Design choice: use of redundant signals (900 MHz), Also secondary system (Beacons). Implement easy integration of rocket attitude in simulator to predict landing location and have GPS data logging to have the latest registered position of the rocket.
6	Arming	Not enough battery power to launch after wait time on pad.	Weather is not optimal. Electrical issues with igniters. Another rocket has problems which delay the countdown.	2	5	10	Dedicate more mass budget to batteries in order to last for 3(+) hours. Implement standby or hibernation modes in sub-systems such that they drain less power before launch.
7	Flight	Unusable flight	The stability margin is smaller than expected. Elements detach in rocket (Bouncing).	2	4	8	Check CP/CM through different calculations + people
8	Recovery	Pre-deployment on the ground	Eyebolt and bulkhead damage. Damage to body tube.	2	4	8	Shunt charges until they're attached to recovery electronics. Do not move rocket with armed electronics.
9	Disassembly	Impossible due to jammed subsystems	Following a rocket crash, parts are deformed or temperature variations warp the parts such that they get stuck.	2	3	6	Bring adapted (incl destructive) tools for this case. Design such that assembly and disassembly are easy and not influenced by temperature variations.
10	Ground arrival	Damage on landing	Non nominal operation of parachute and recovery or underestimated parachute size.	3	2	6	Design choice of parachute size, also avoid to have fragile parts exposed.
12	Recovery	Main chute deploys at/near apogee	Shear pins, body tube or bulkhead failure. Chances of drifting more than expected.	3	2	6	Ensure integrity of parts and assembly before launch
13	Firing	Misfire	It happens....	3	1	3	Use two igniters from the beginning, (ask for) recycle.

			Consequence				
			1	2	3	4	5
			Almost no impact, < 4 man hours to solve	No critical impact, < 4-20 man hours to solve	Critical impact, < 20-40 man hours to solve	Highly critical impact, 40+ man hours to solve	Mission failure
PROBABILITY	5	80-100% chance	5	10	15	20	25
	4	60-80% chance	4	8	12	16	20
	3	40-60% chance	3	6	9	12	15
	2	20-40% chance	2	4	6	8	10
	1	0-20% chance	1	2	3	4	5

Appendix D
ASSEMBLY, PREFLIGHT AND LAUNCH CHECKLIST APPENDIX

THIS PAGE IS INTENTIONALLY LEFT BLANK.

Assembly, Preflight & Launch Checklist

Title:	
Aim:	
Testing Team:	
Approved By:	
Location:	
Status:	-

Assembly

1. Ejection Charge Preparation
   - 1.1. Midnight Sun Main
   - 1.2. Midnight Sun Drogue
2. Parachute Preparation
   - 2.1. Verify that parachute is intact, contains no rips, tears, or other imperfections
   - 2.2. Lay parachute out flat on a stable and clean working surface
   - 2.3. Fold in half such that the shroud lines align cleanly
   - 2.4. Fold in thirds such that the parachute becomes a triangle with a rounded bottom edge, ensuring the shroud lines do not get tangled
   - 2.5. Z-fold the parachute such that the tip of the “triangle” comes closer towards the rounded edge & shroud lines
   - 2.6. Repeat steps 2.4 & 2.5 until the parachute is compact enough to fit inside the parachute bay
   - 2.7. Z-fold the shroud lines
   - 2.8. Group the folded shroud lines & parachute together, for ease of inserting into parachute bag later

3. Prepare Avionics Bay
   - 3.1. Complete the enclosure assembly
     - 3.1.1. Connect Electronics retention with slits and bolt them with M5 screws
     - 3.1.2. Connect avionics connection rings on the upper section of assembly
   - 3.2. Verify that the two batteries are charged to at least 7.2V and one 11.1V
   - 3.3. Install the Switches on the fuselage
   - 3.4. Screw antenna board, and SRAD Avionics and ziptie 11.1V battery to sled 1.

3.5. Screw Proton and ziptie 7.2V battery to sled 2
3.6. Screw Quantum and ziptie 7.2V battery to sled 3
3.7. Implement wiring pattern
  3.7.1. Sled 1: Connect Proton MAIN to Breakout Primary MAIN 2
  3.7.2. Sled 1: Connect Proton DROGUE to Breakout Primary DROGUE 1
  3.7.3. Sled 2: Connect Quantum MAIN to Breakout Backup MAIN 3
  3.7.4. Sled 2: Connect Quantum DROGUE to Breakout Backup DROGUE 4
  3.7.5. Connect Red Switch with SRAD Avionics
  3.7.6. Connect Blue Switch with Proton
  3.7.7. Connect Green Switch with Quantum.
  3.7.8. Check continuity across all connections
3.8. Screw one battery and enclosure into each sled's standoffs
3.9. Screw Big Red Bee into Sled 1 standoffs
3.10. Independently power each RRC3, verify the startup beep sequence is correct (ignoring continuity checks, all charge lines should be open)
3.11. Initialize SRAD Avionics
  3.11.1. Plug in internal power
  3.11.2. Monitor radio packets with ground radio, verify packets are received with the expected checksums
  3.11.3. Verify GPS lock is achieved, this may take time
3.12. Insert sleds into appropriately keyed slots
3.13. Connect Proton battery
3.14. Connect Quantum battery
3.15. Connect SRAD Avionics battery
3.16. Lock XT-60 connectors with zip ties

4. Recovery

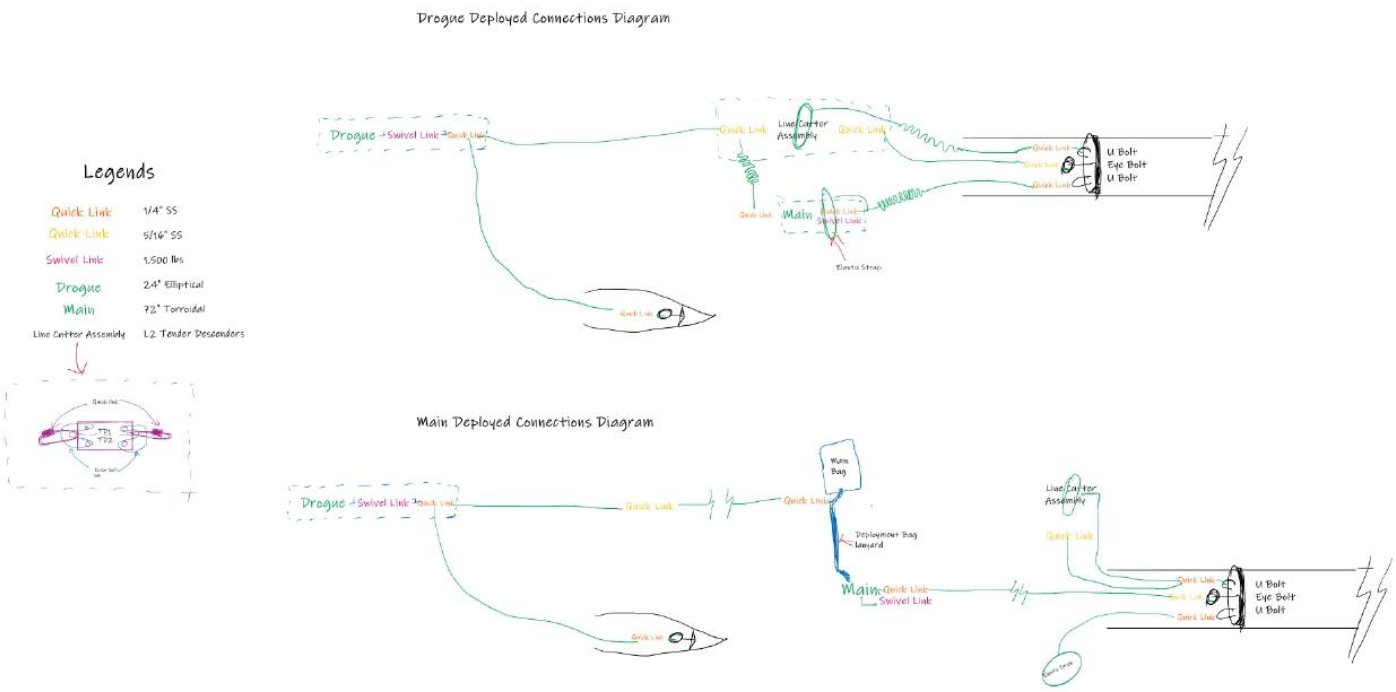

4.1. Connect Drogue Quick link to nose eyebolt with shock cord 6 ft long with Palomar knot on both ends
4.2. Connect Drogue Quick link to LC assembly quick link with 10 ft long shock cord with Palomar knots
4.3. Line cutter assembly:
  4.3.1. Prepare Ejection Charges for both TD reservoirs.

4.3.2. Put kevlar soft link in loop for both ends of TDs
4.3.3. Connect quick link in the two ends of kevlar loops
4.3.4. Ziptie both TDs and harness it to eyebolt at recovery bulkhead (Make sure it is longer than drogue riser line for a loose link and it dangles in air)
4.3.5. Harness TD pins with TD body (SO YOU RECOVERY EVERY BIT OF TD)

4.4. Connect the bottom Line cutter link to Recovery Bulkhead using Palomar knot with 5 ft long shock cord.
4.5. Connect top Line cutter link with main chute shock cord (10 ft long with 3 break points of 2.5 ft each)
4.6. Connect Main chute swivel link with a quick link and harness it to recovery bulkhead with Palomar knot using 10 ft long shock cord (3 break points of 2.5 ft each)
4.7. Mark all Quick links with marker to post flight analysis if any links opened mid-flight
4.8. Pack Everthing inside upper airframe and nosecone.

5. Booster Preparation

5.1. Booster Tube

5.1.1. Pass threaded rods from thrust bulkhead through threaded rods with distances inline with the holes in tubes.
5.1.2. Insert the threaded rod assembly in the Booster Section, bolt them from outside.
5.1.3. Insert loaded motor into the boat tail
5.1.4. Insert the Fin Assembly through the case
5.1.5. Screw in combined boat tail and motor retainer
5.1.6. Bolt rest of items (fincan, and boat tail) to the booster tube from outside

5.2. Fin Assembly

5.2.1. Insert the slits and fins on one of the fin can rings
5.2.2. Insert the other end of ring to the top to create a tight fit
5.2.3. Put the rest of the slits and fins on the other gaps in rings
5.2.4. Screw them well with M6 bolts
5.2.5. Screw the fins with slits with M8 bolts
5.2.6. Pass M8 threaded rods from the fin can holes
5.2.7. Connect boat tail retention ring and bolt threaded rod from bottom
5.2.8. Pass the assembly to booster tube preparation.

6. Final Airframe Assembly

6.1. Upper AIrframe

6.1.1. Connect the switches to the flight computers
6.1.2. Insert electronics stack into tube
6.1.3. Screw M5 into inserts
6.1.4. Attach primary charge to black and red lines
6.1.5. Attach secondary charge to blue and orange lines
6.1.6. Insert the recovery bulkhead into the tube
6.1.7. Screw the bulkhead from outside
6.1.8. Connect quick links from recovery to recovery bulkhead
6.1.9. Inspect attached recovery harness to ensure no tears, frays, or other damage is present which might result in recovery failure
6.1.10. Attach the bottom coupler and bolt from the fuselage

6.2. Nose Cone

6.2.1. Insert M5 threaded rod and U bolt retention plate into the nose
6.2.2. Harness quicklink from drogue to U bolt
6.2.3. Pack excess recovery hardware from Upper Airframe into the nose
6.2.4. Insert nose to UA
6.2.5. Insert M4 Nylon bolts from outside

6.3. Booster Tube

6.3.1. Inspect boat tail retention with booster tube and verify the fit
6.3.2. Wiggle the motor to verify any loose connections
6.3.3. Insert the packed booster tube into the bottom coupler and bolt from outside

6.4. Cover the nozzle with masking tape
6.5. Get the ignitors and head to launch pad

Preflight

7. Pad Operations
    - 7.1. Close avionics switches pressing the buttons
    - 7.2. Listen for beeps that confirm continuity, as described in the Eggtimer manual
        - 7.2.1. 3 second beep indicates power on
        - 7.2.2. 10 second delay
        - 7.2.3. Arming the pyro channels with the web interface (192.168.4.1)
        - 7.2.4. Any other sequence might indicate failure
    - 7.3. Repeat procedure for each arming switch on the rocket
8. Monitor radio packets from SRAD flight computer at the ground station. Wait for GPS to triangulate location

9. **Pre Launch Poll**

9.1.	Avionics	Go	No Go
9.2.	GPS	Go	No Go
9.3.	Cameras	Go	No Go
9.4.	Visual Tracking	Go	No Go

10. **Post Flight**
    - 10.1. Check video feed for approx. landing location
    - 10.2. Check avionics for current/last known position
    - 10.3. Proceed to landing site per LASC rules and regulations
    - 10.4. Document the landing site/state of the rocket
    - 10.5. Record altitude from the altimeters per LASC rules and regulations
    - 10.6. Turn off avionics

Re-pack parachutes for ease of carrying

Appendix E
ENGINEERING DRAWINGS

THIS PAGE IS INTENTIONALLY LEFT BLANK.

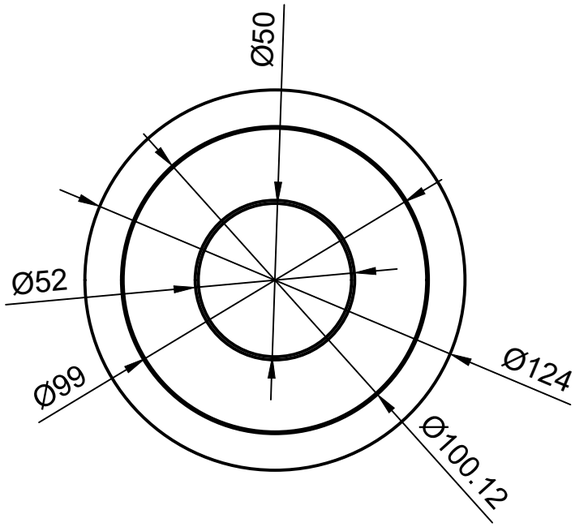

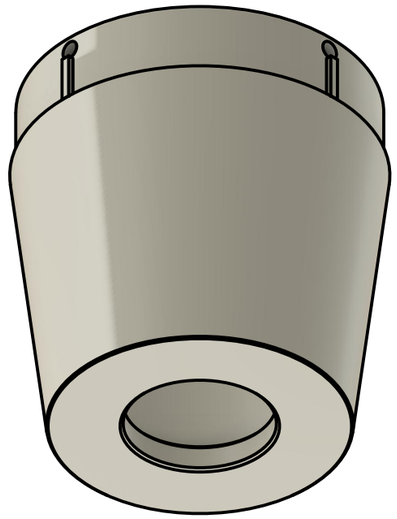

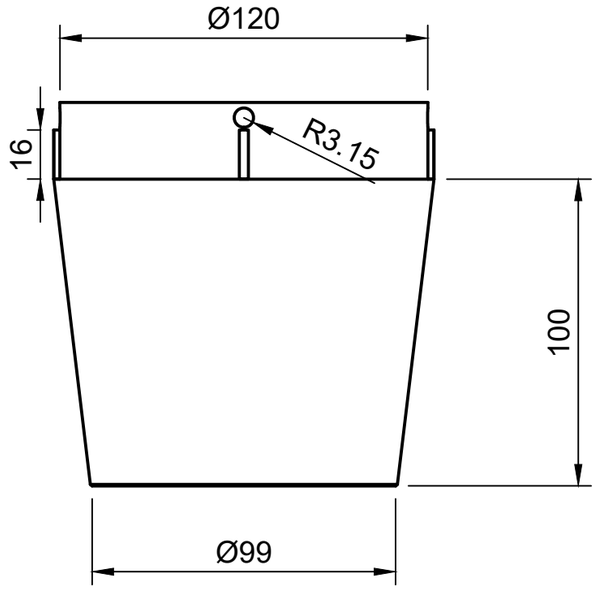

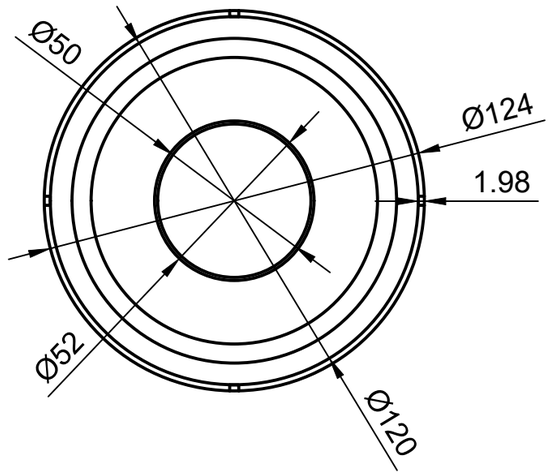

Dept.	Technical reference	Created by Aasit Vora	Approved by
All dimensions are in mm		Document type	Document status
		Title Boat-tail	DWG No. 1
			Rev. / Date of issue / Sheet 1/1

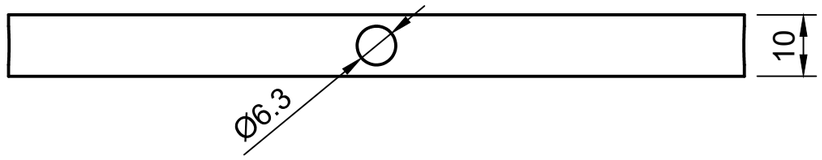

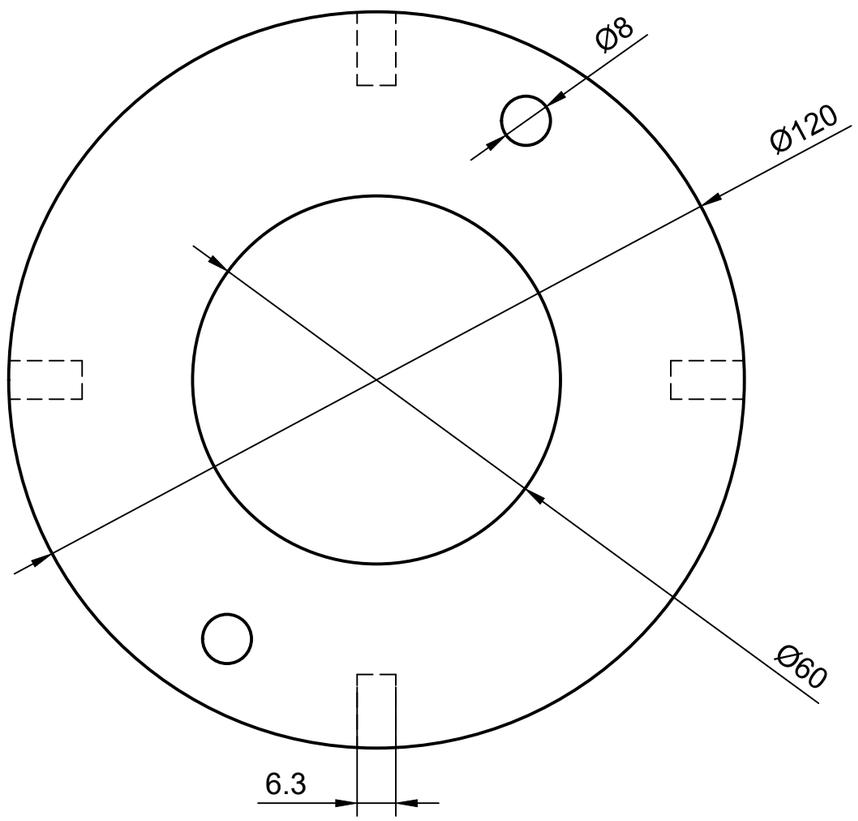

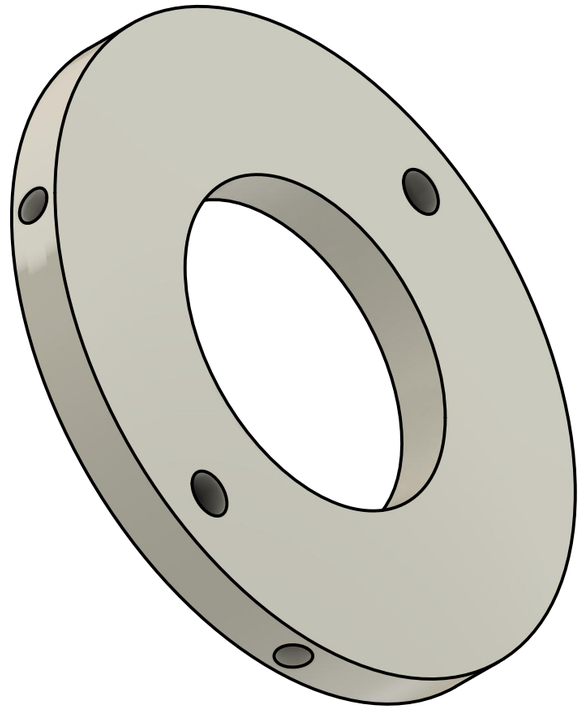

Dept.	Technical reference	Created by Tanmay Kanmahale	Approved by
All dimensions are in mm		Document type	Document status
		Title Centering Rings	DWG No. 2
			Rev. / Date of issue / Sheet 1/1

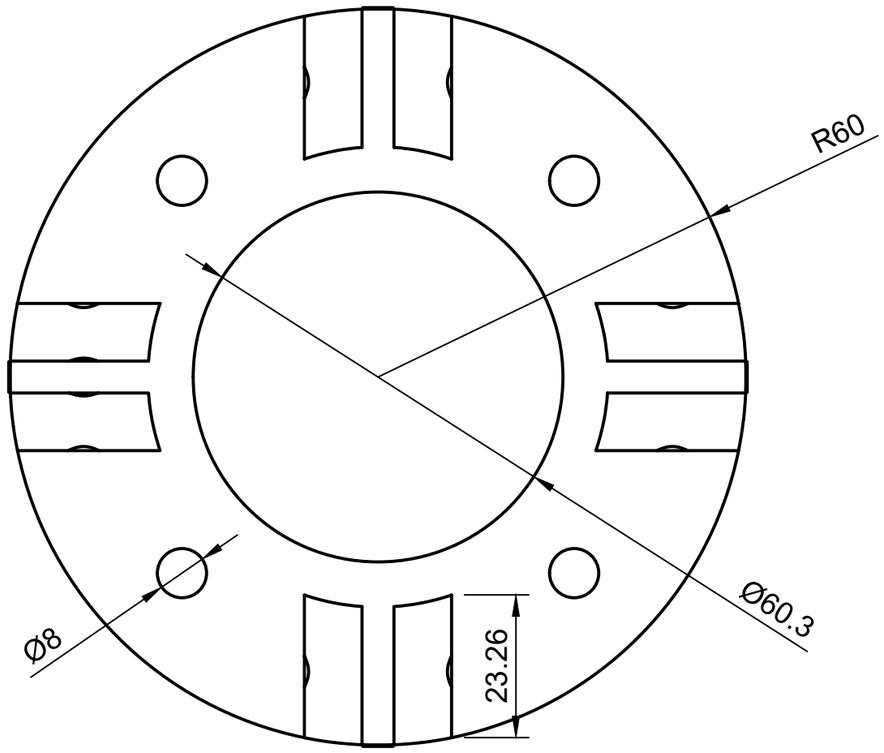

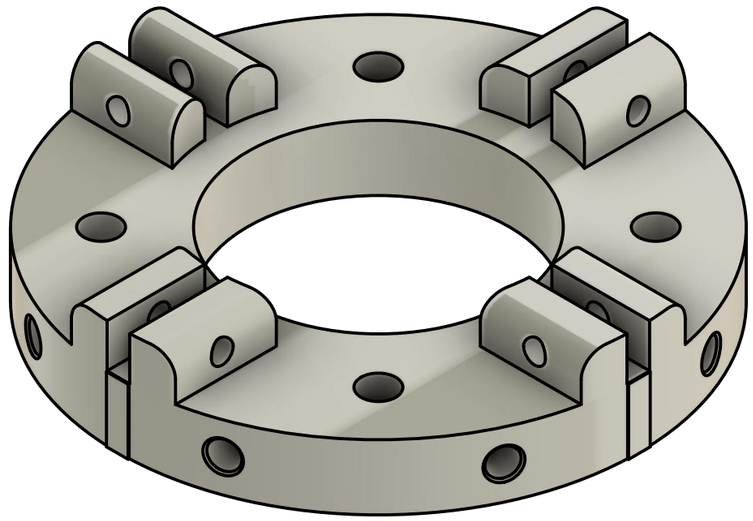

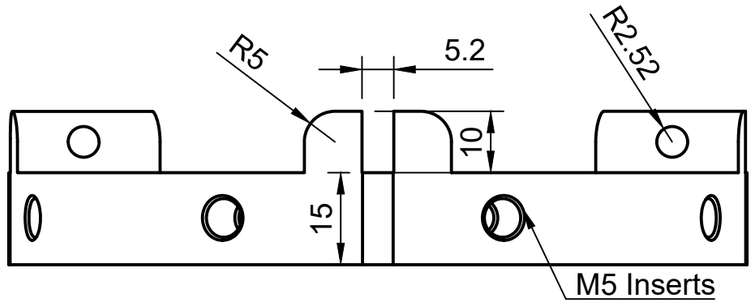

Dept.	Technical reference	Created by Aasit vora	Approved by
All dimensions are in mm		Document type	Document status
		Title Fin Can Ring	DWG No. 3
			Rev. / Date of issue / Sheet 1/1

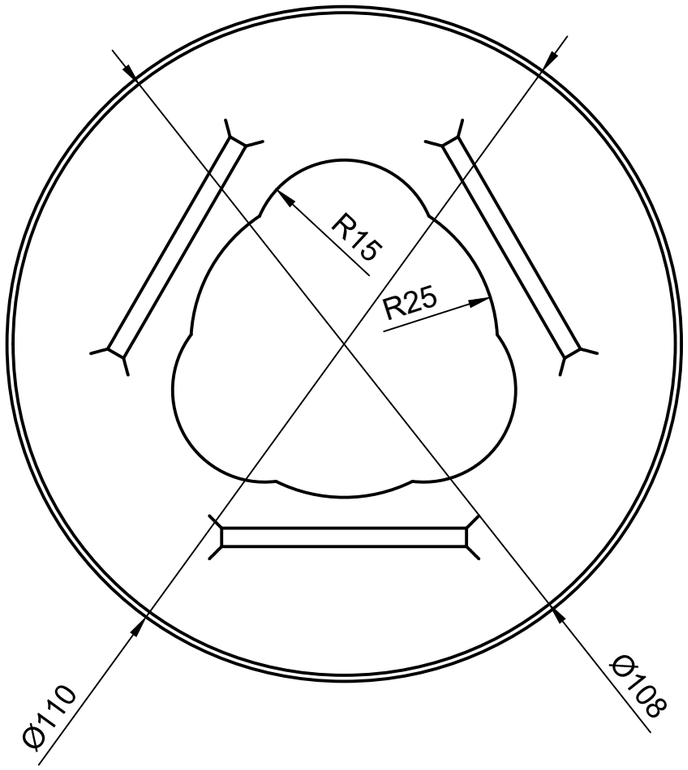

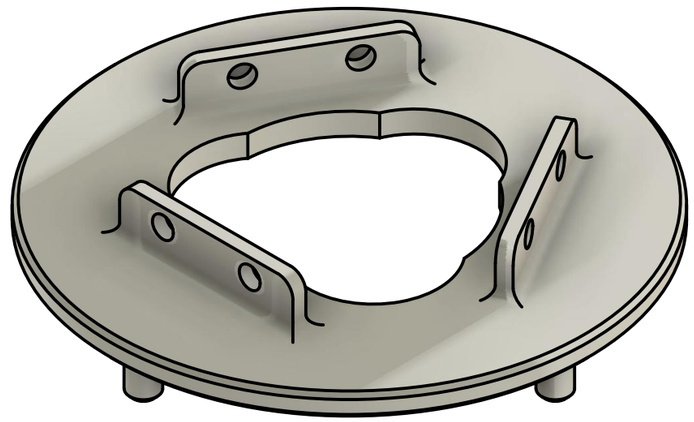

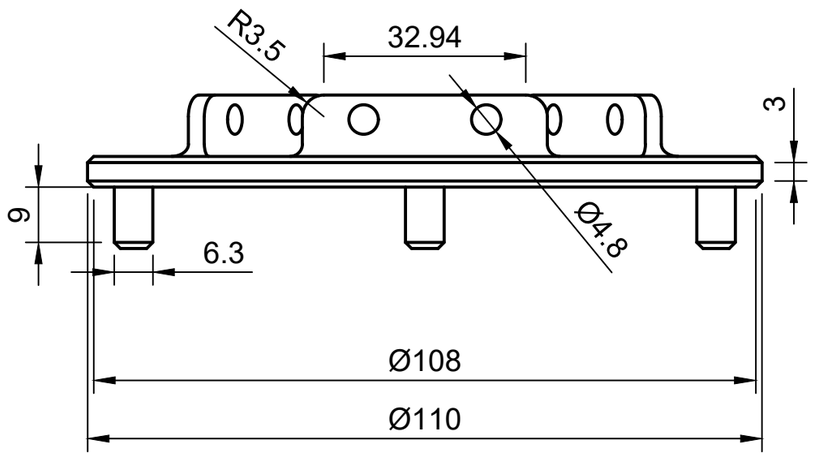

Dept.	Technical reference	Created by	Approved by
		Aasit vora	
All dimensions are in mm		Document type	Document status
		Title: Avionics Mounting Brackets	DWG No. 4
			Rev. / Date of issue / Sheet 1/1

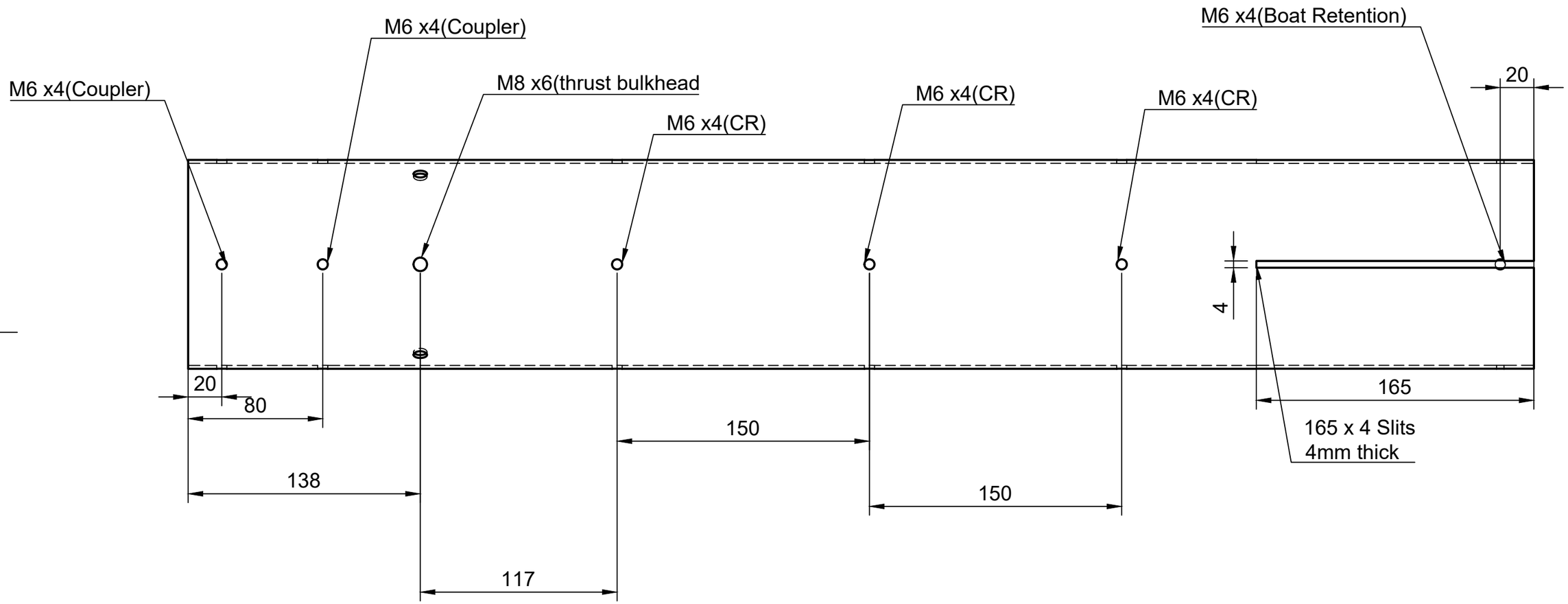

Dept.	Technical reference	Created by Tanmay Kanmahale	Approved by
All dimensions are in mm		Document type	Document status
		Title Booster Tube	DWG No. 5
			Rev. / Date of issue / Sheet 1/1

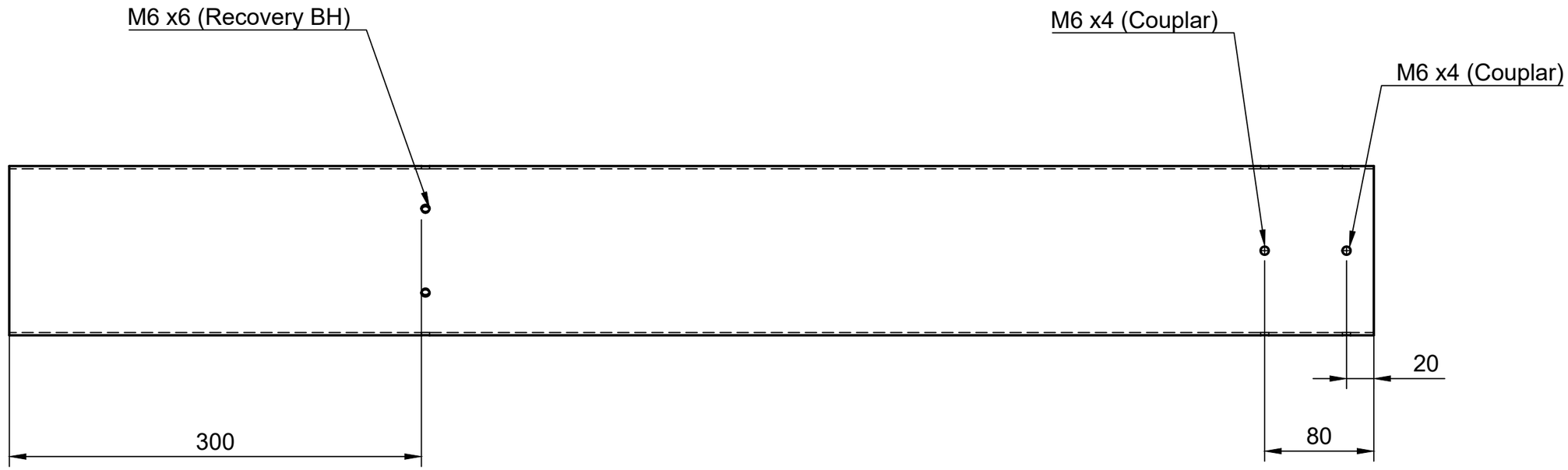

Dept.	Technical reference	Created by Aasit Vora	Approved by
All dimensions are in mm		Document type	Document status
		Title Upper Airframe	DWG No. 6
			Rev. / Date of issue / Sheet 1/1

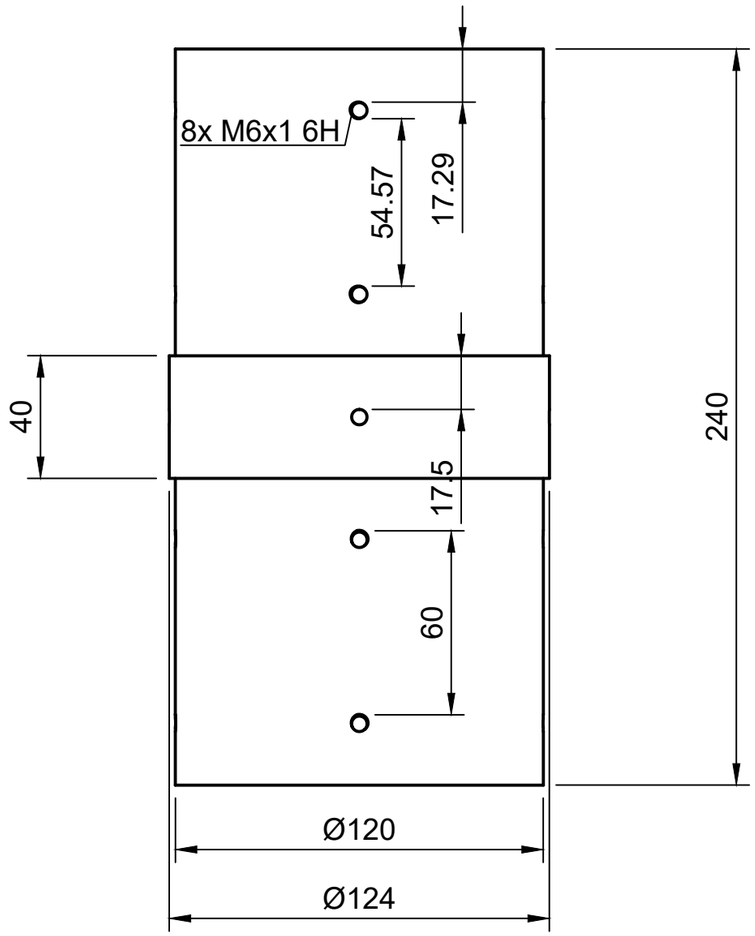

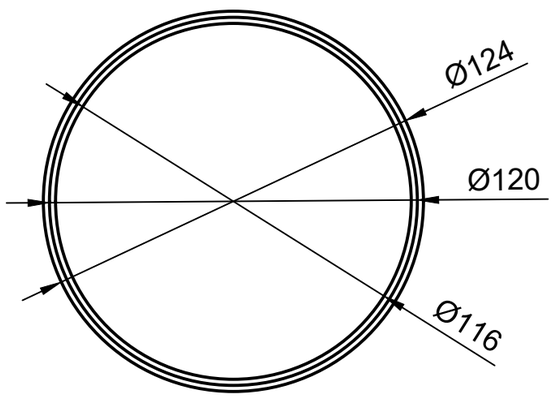

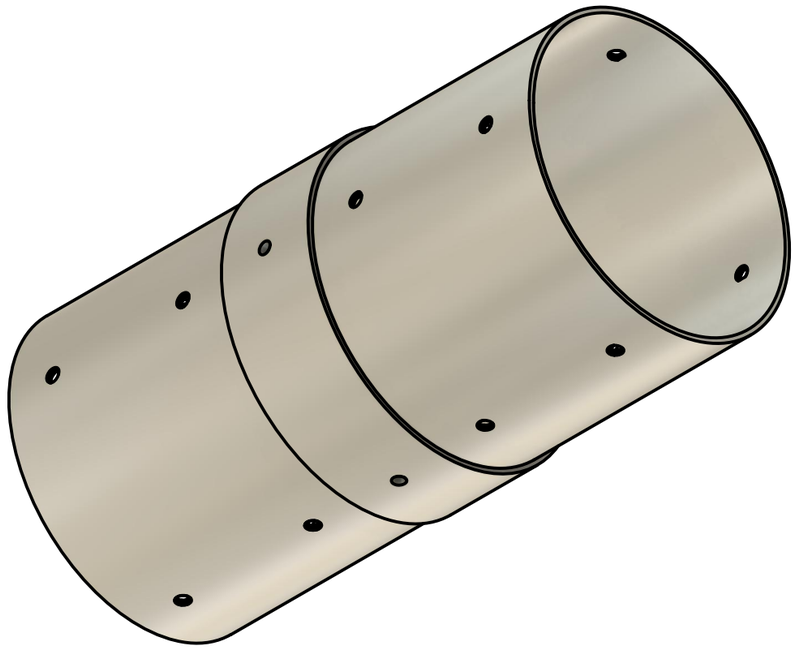

Dept.	Technical reference	Created by Tanmay Kanmahale	Approved by
All dimensions are in mm		Document type	Document status
		Title Coupler	DWG No. 7
			Rev. / Date of issue / Sheet 1/1

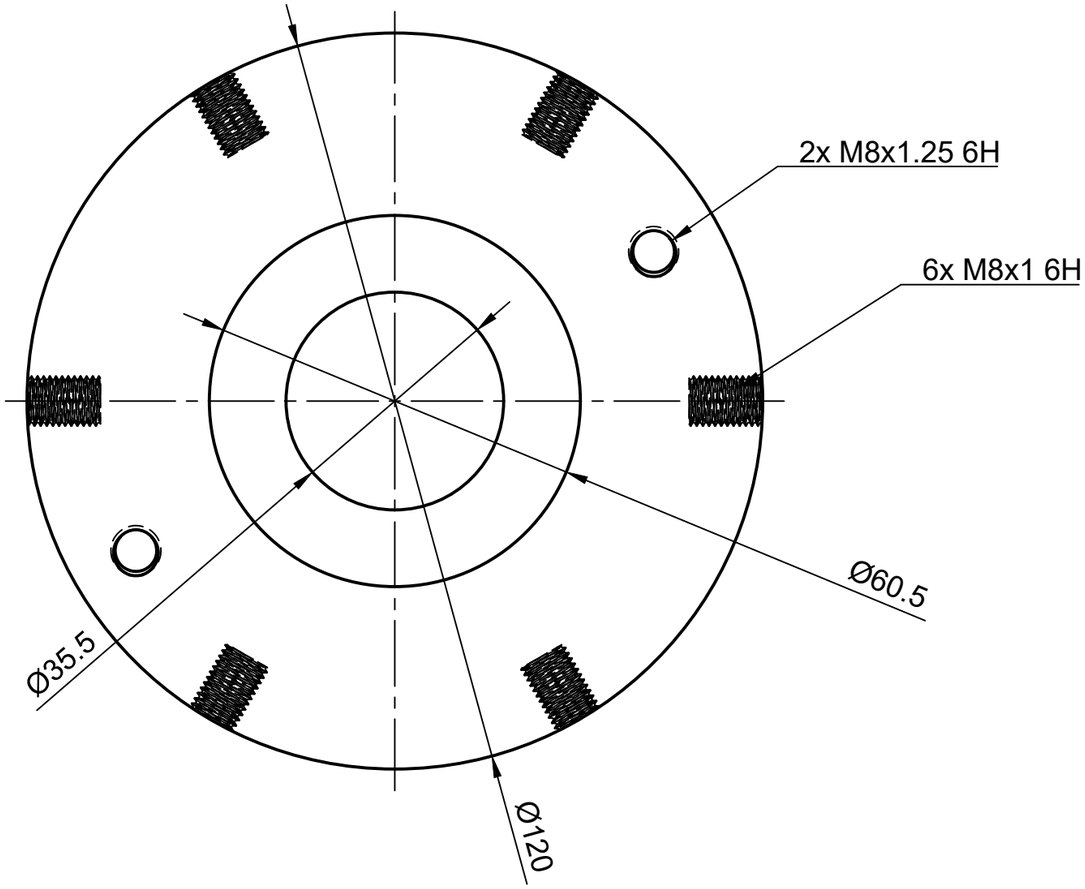

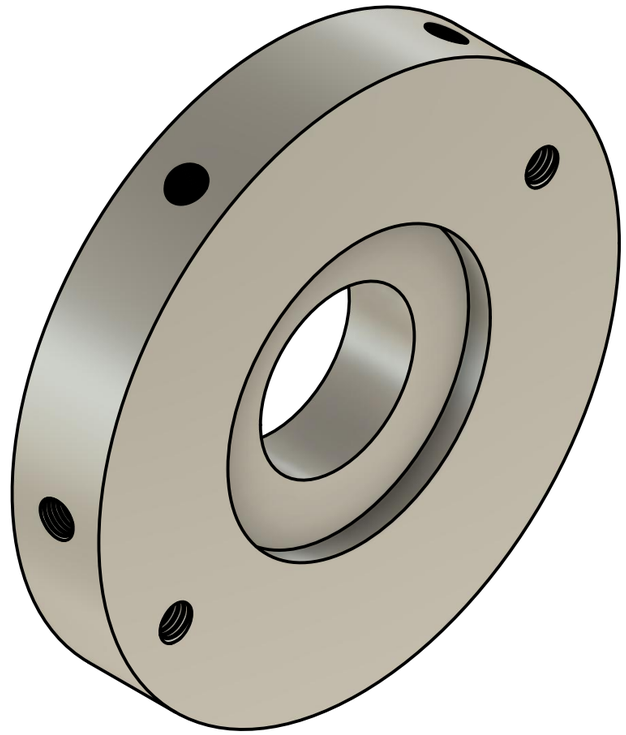

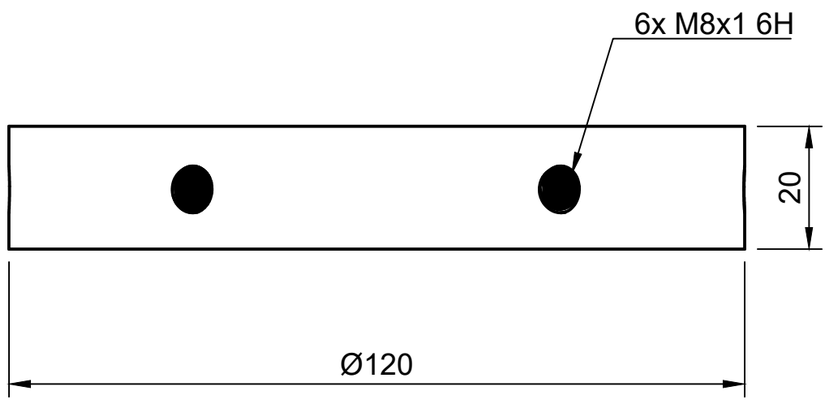

Dept.	Technical reference	Created by Aasit Vora	Approved by
All dimensions are in mm		Document type	Document status
		Title Thrust Bulkhead	DWG No. 8
			Rev. / Date of issue / Sheet 1/1

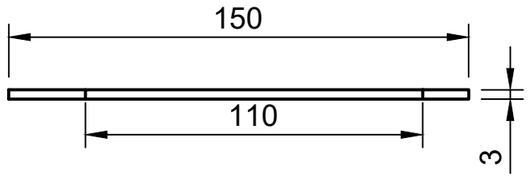

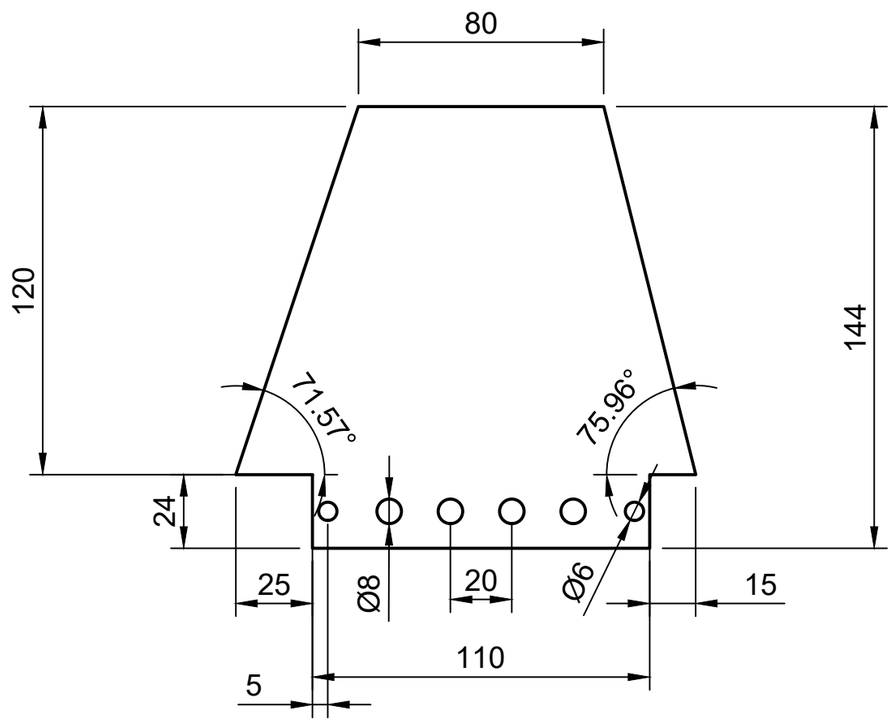

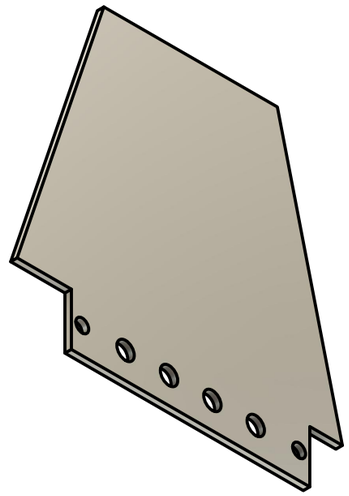

Dept.	Technical reference	Created by	Approved by
		Tanmay Kanmahale	
All dimensions are in mm		Document type	Document status
		Title Fins	DWG No. 9
			Rev. / Date of issue / Sheet 1/1

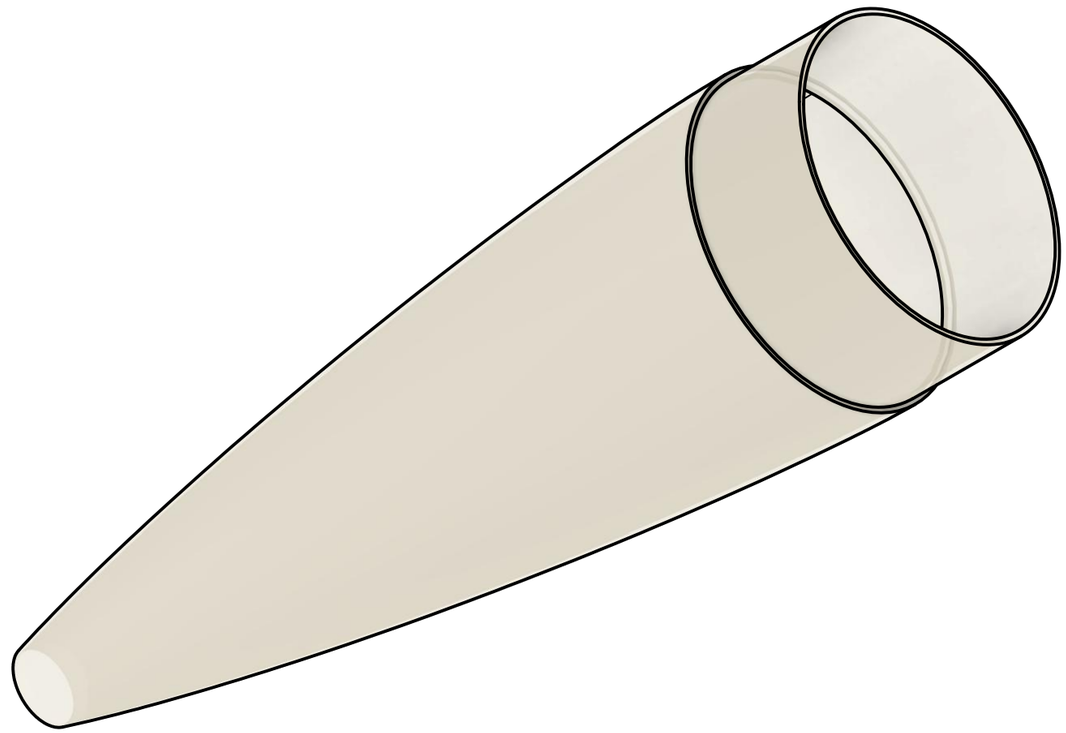

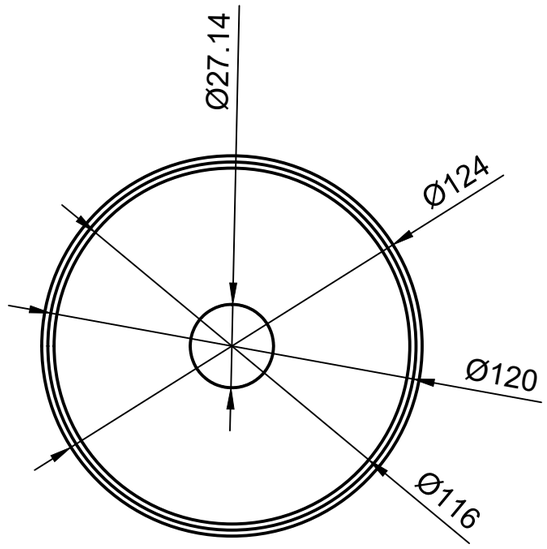

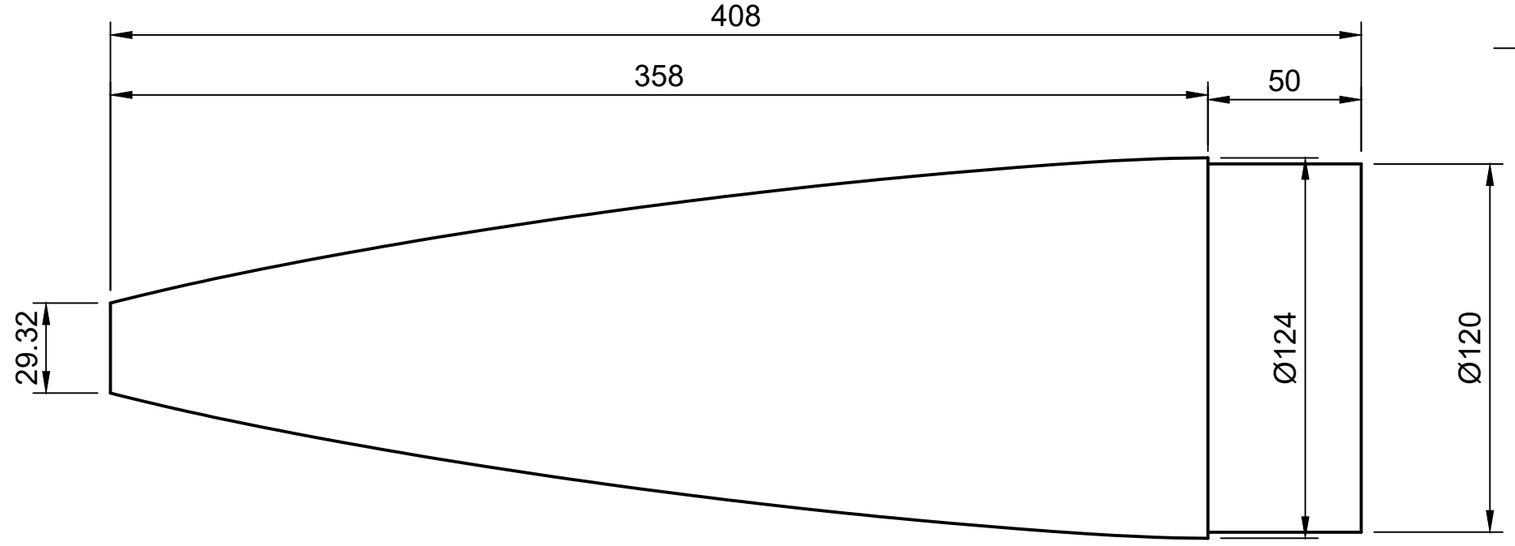

Dept.	Technical reference	Created by Aasit Vora	Approved by
All dimensions are in mm		Document type	Document status
		Title Nosecone	DWG No. 10
			Rev. / Date of issue / Sheet 1/1

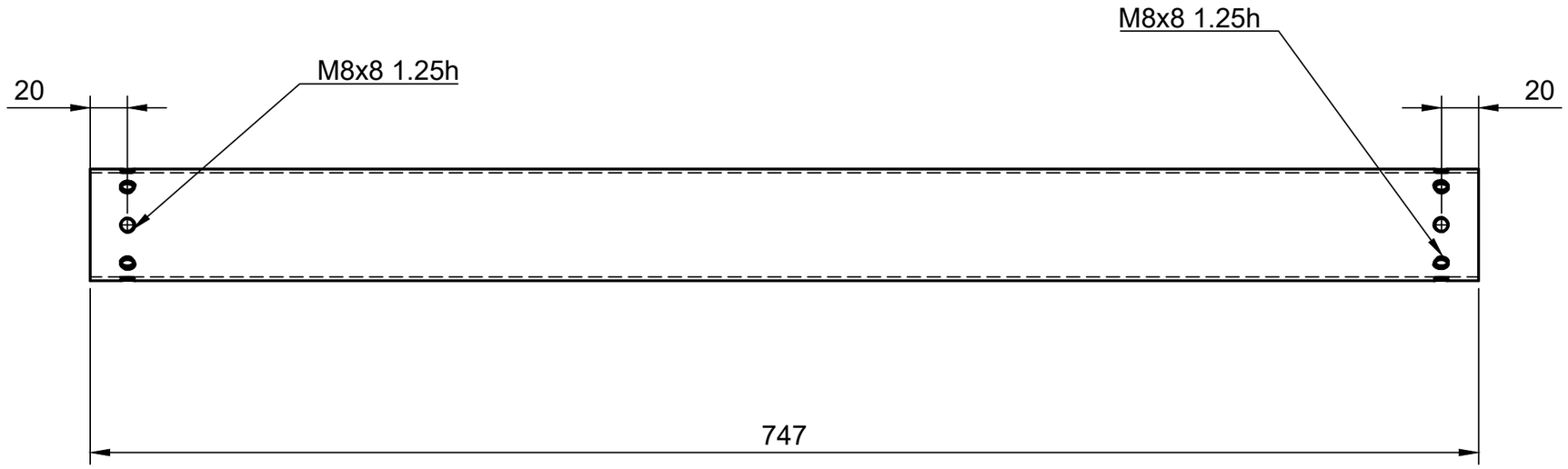

Dept.	Technical reference	Created by Tanmay Kanmahale	Approved by
All dimensions are in mm		Document type	Document status
		Title Motor Case	DWG No. 11
			Rev. / Date of issue / Sheet 1/1

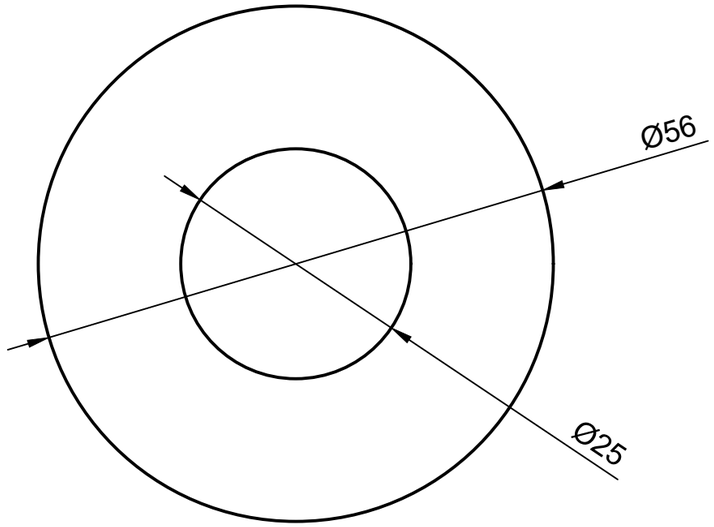

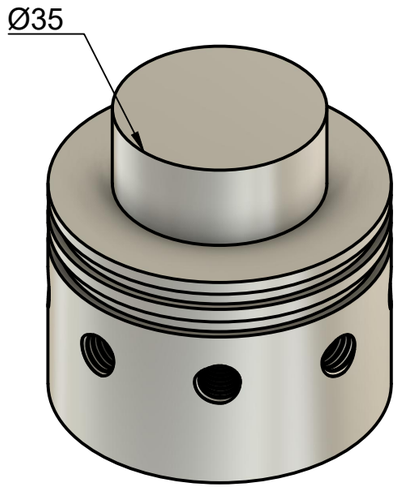

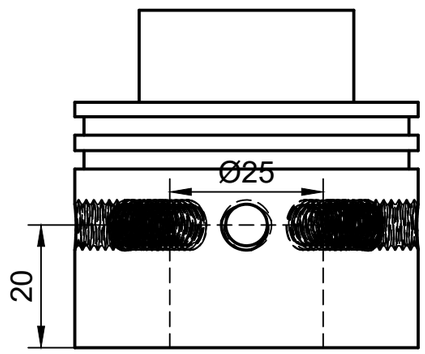

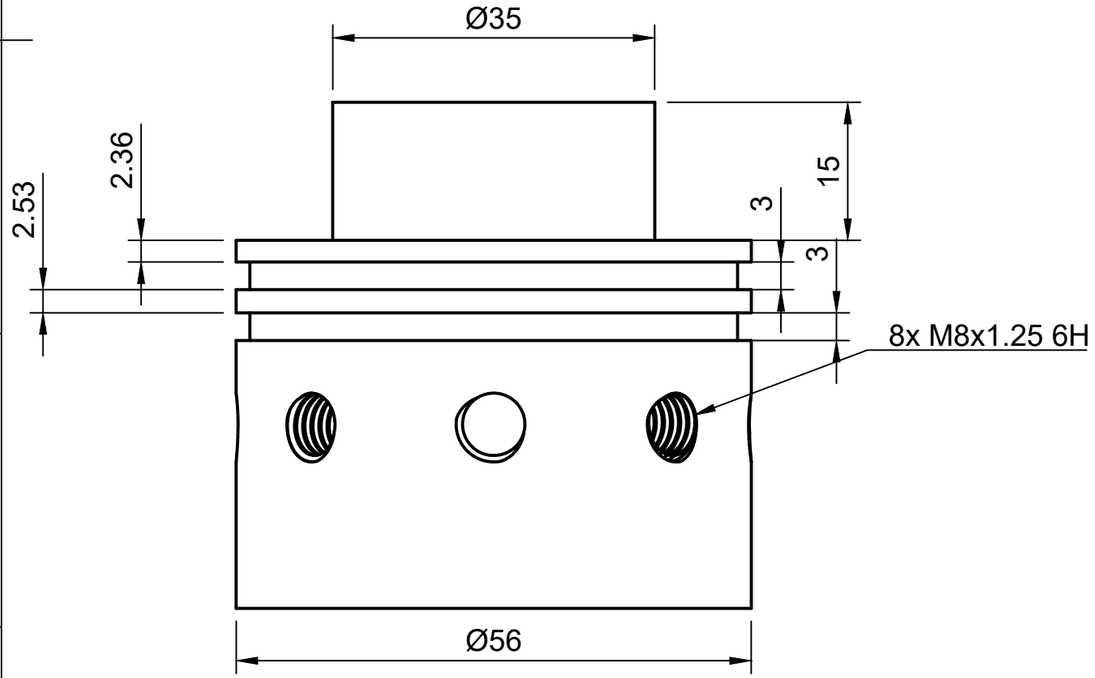

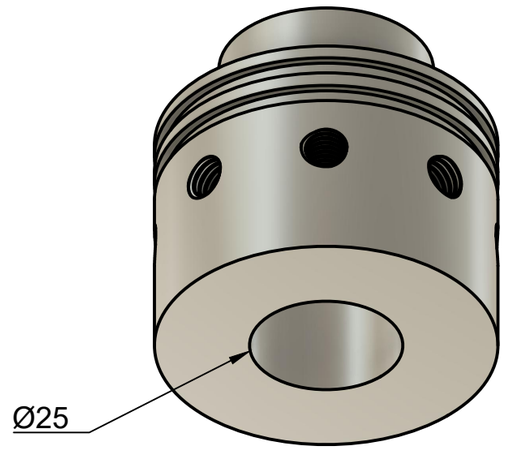

Dept.	Technical reference	Created by Prashant Patil	Approved by
All dimensions are in mm		Document type	Document status
		Title Forward Clouser	DWG No. 12
		Rev.	Date of issue	Sheet 1/1

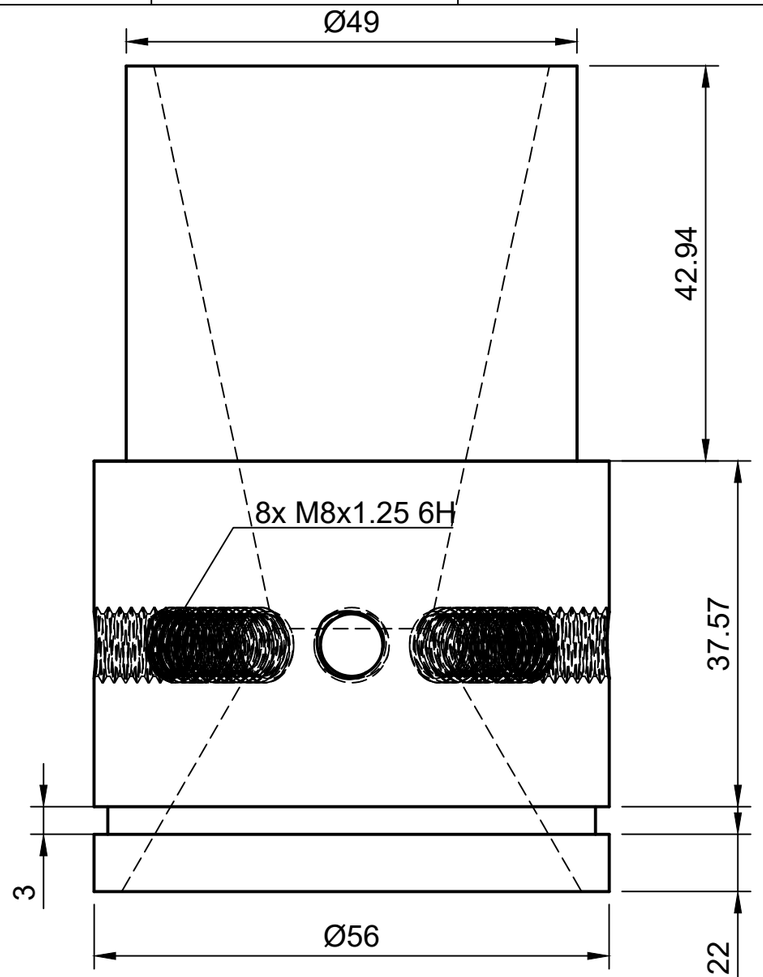

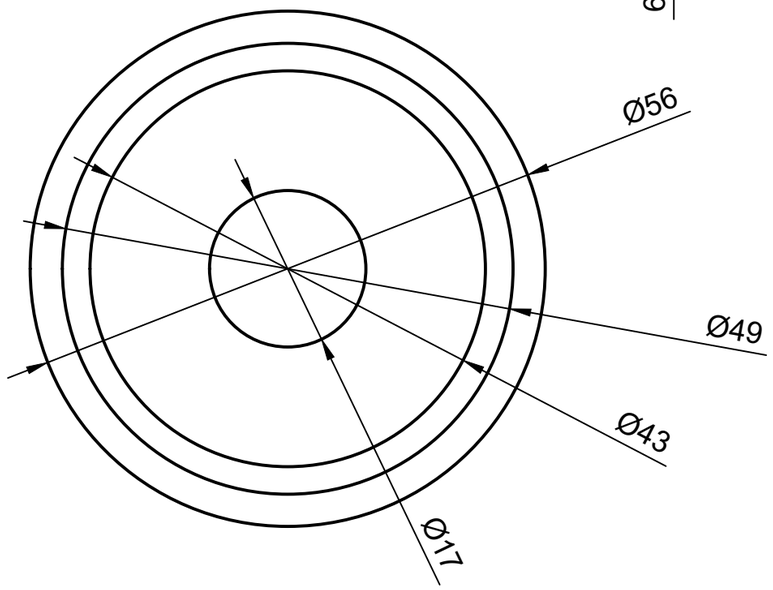

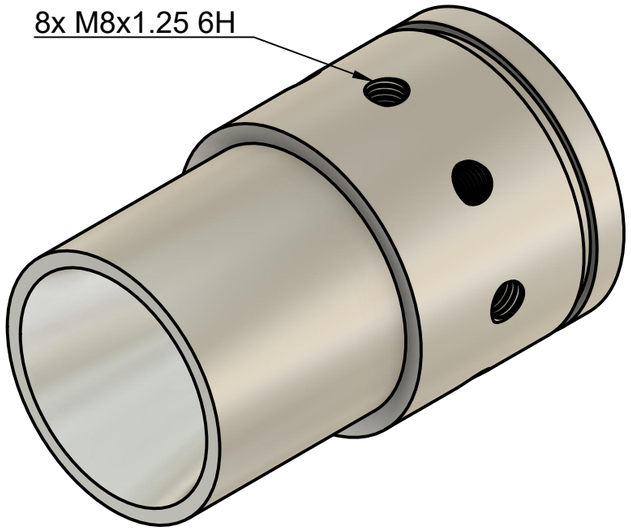

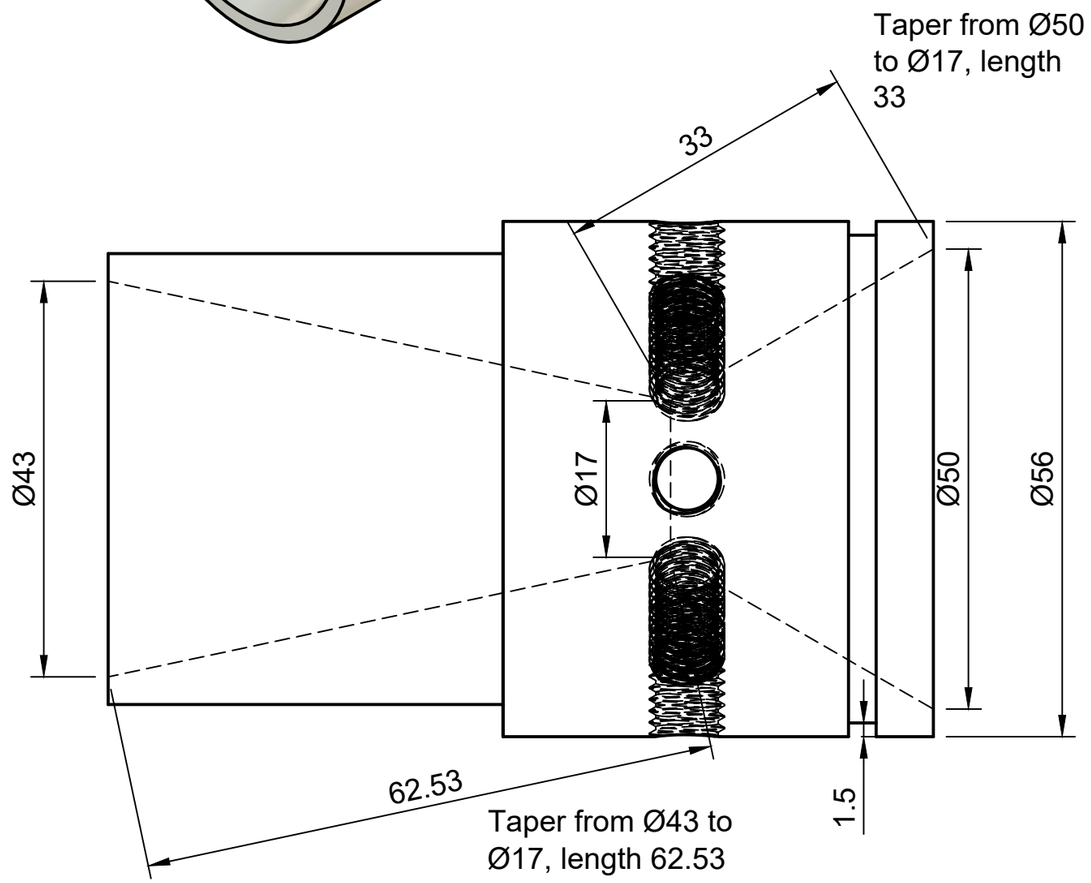

Dept.	Technical reference	Created by	Approved by
		Prashant Patil	
All dimensions are in mm		Document type	Document status
		Title: Nozzel	DWG No. 13
			Rev. / Date of issue / Sheet 1/1

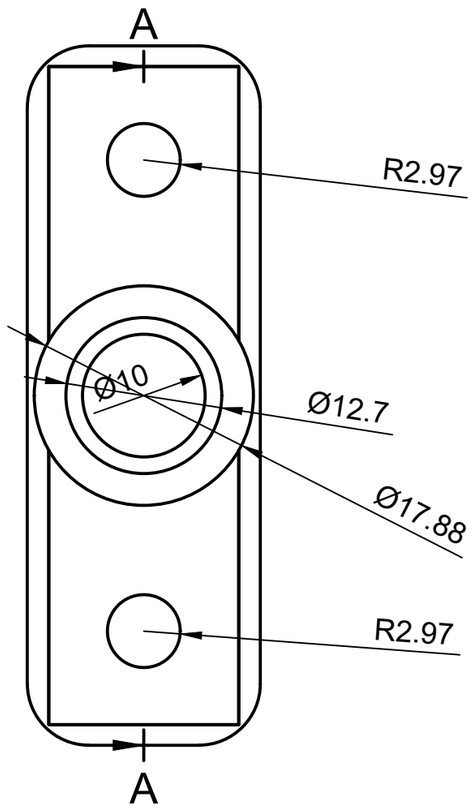

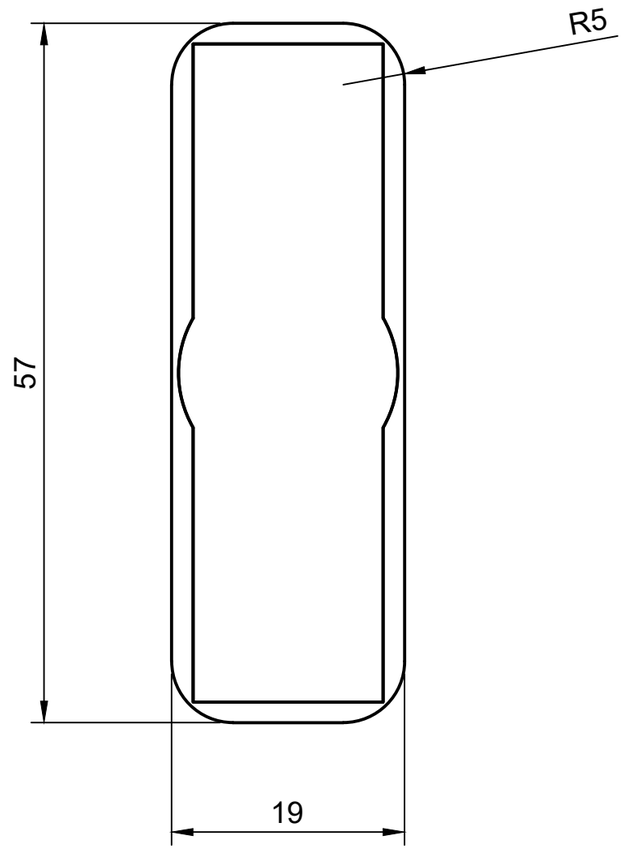

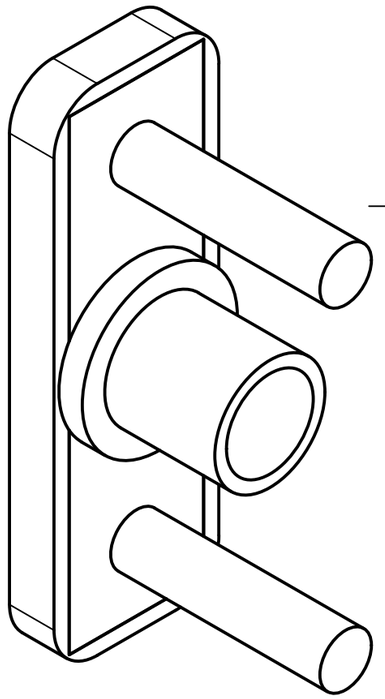

A-A (2:1)

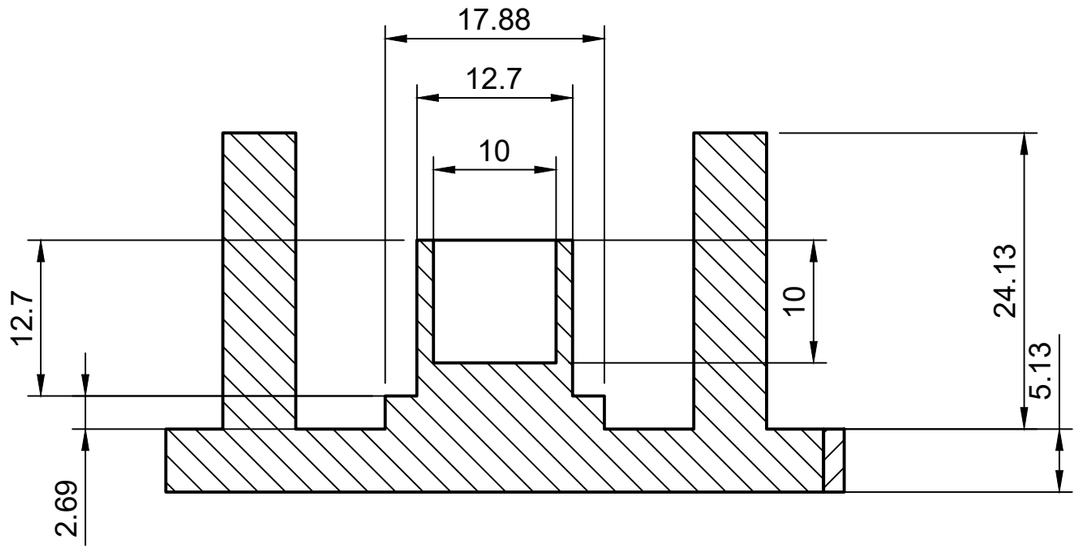

Dept.	Technical reference	Created by Aasit Vora 08-07-2022	Approved by
All dimensions are in mm		Document type	Document status
		Title TD Piston_and_Rods	DWG No. 14
			Rev. / Date of issue / Sheet 1/1

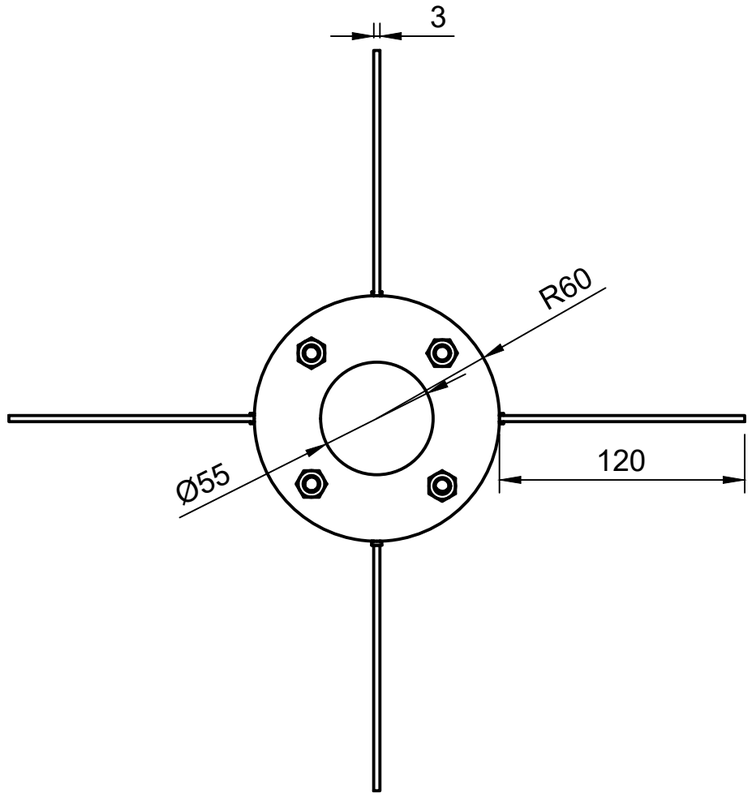

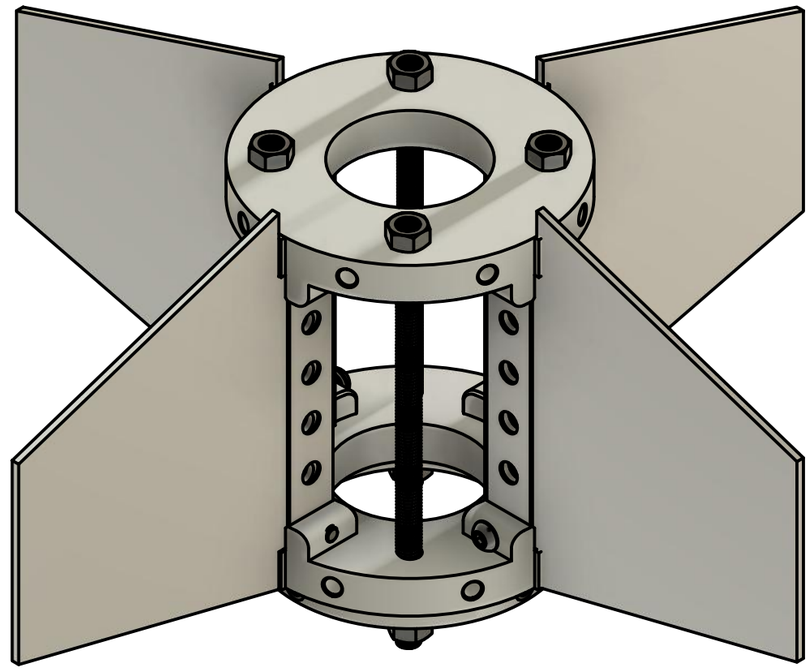

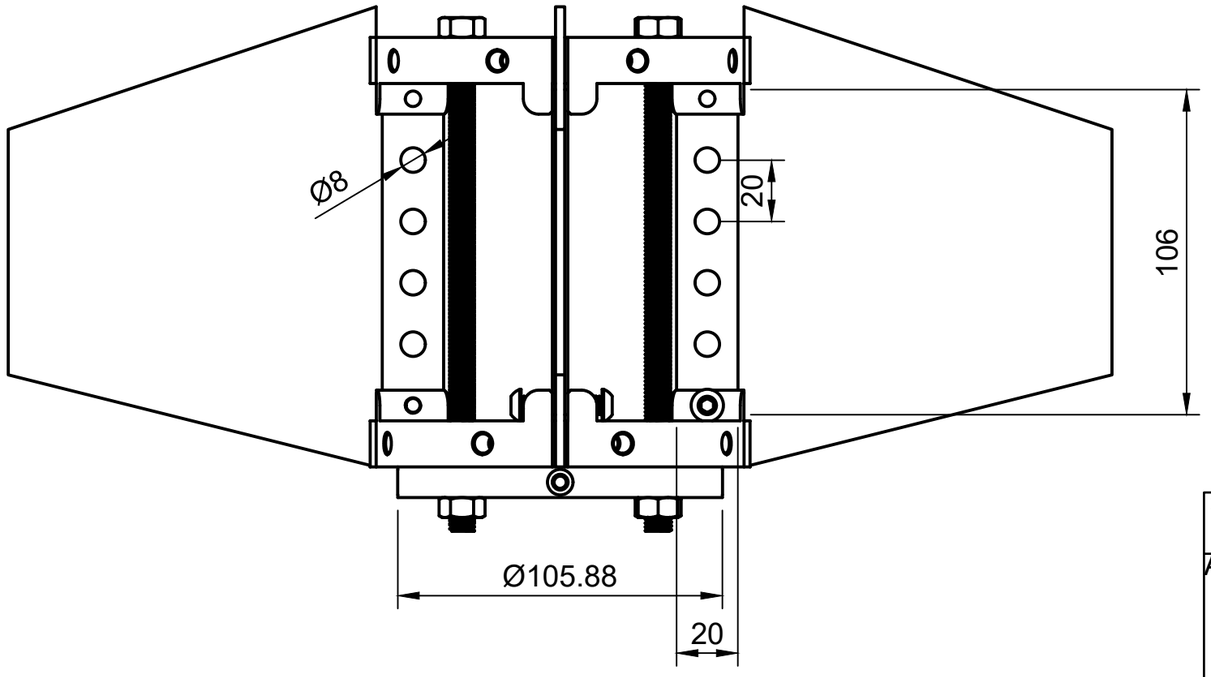

Dept.	Technical reference	Created by Aasit Vora	Approved by
All dimensions are in mm		Document type	Document status
		Title Fins Assembly	DWG No. 15
			Rev. / Date of issue / Sheet 1/1

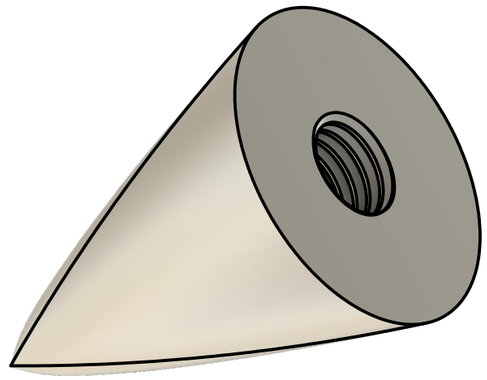

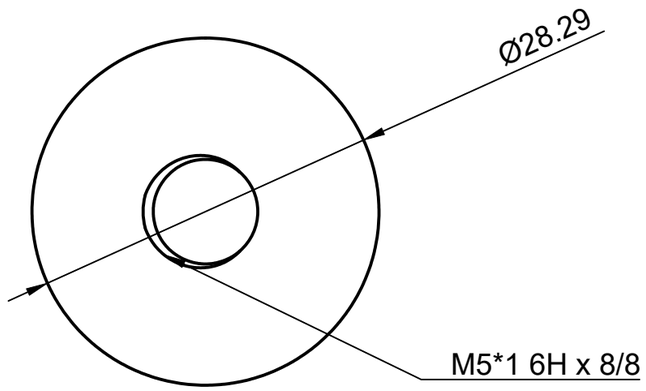

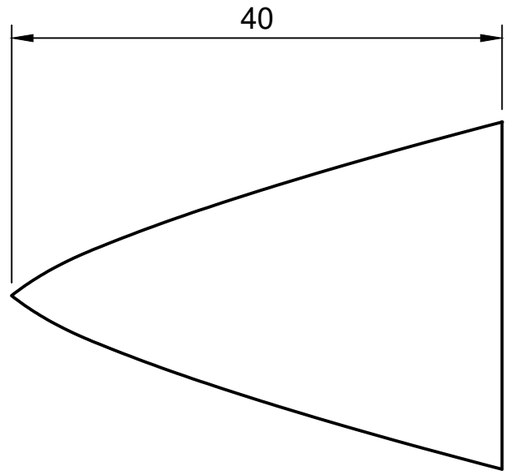

Dept.	Technical reference	Created by Aasit Vora 7/10/2022	Approved by
All dimensions are in mm		Document type	Document status
		Title Nosetip	DWG No. 16
			Rev. / Date of issue / Sheet 1/1

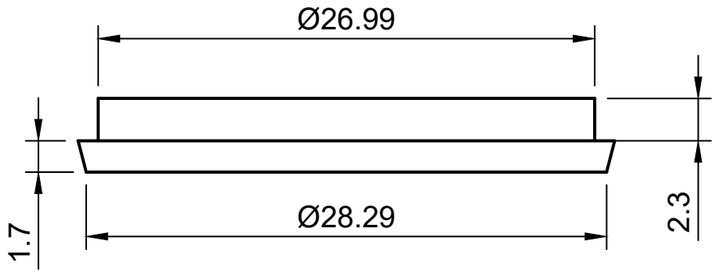

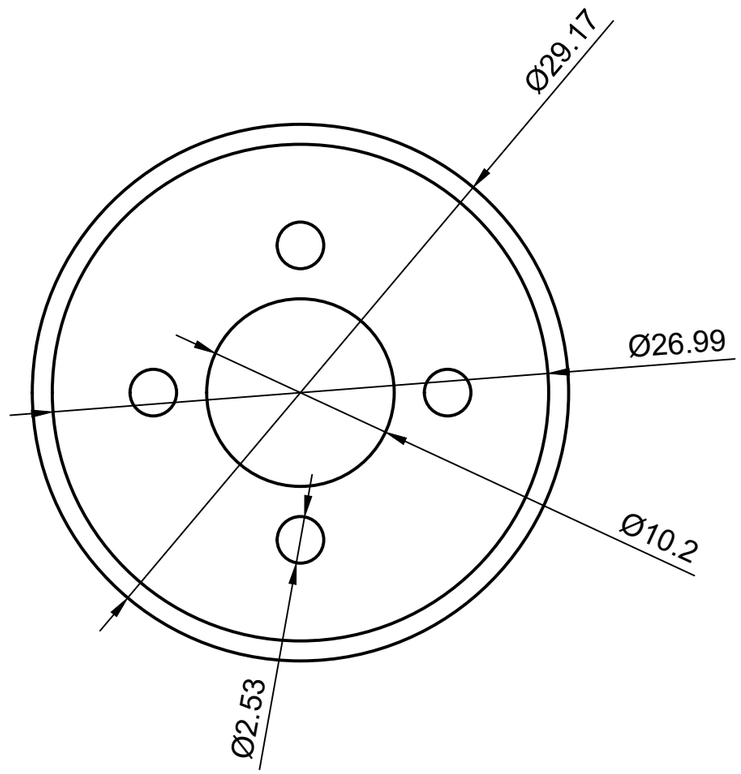

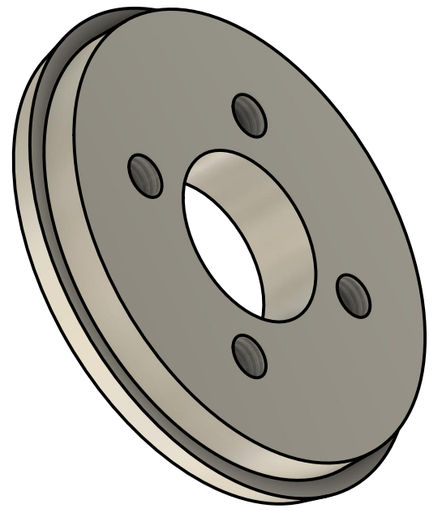

Dept.	Technical reference	Created by Aasit Vora	Approved by
All dimensions are in mm		Document type	Document status
		Title Nosetip Plate	DWG No. 17
			Rev. / Date of issue / Sheet 1/1

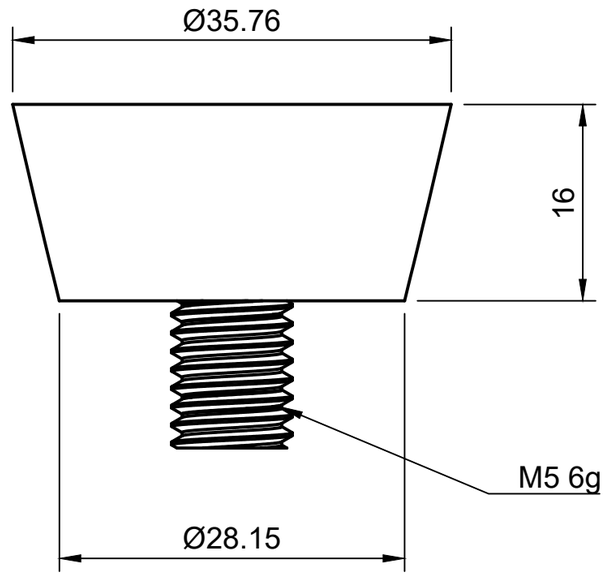

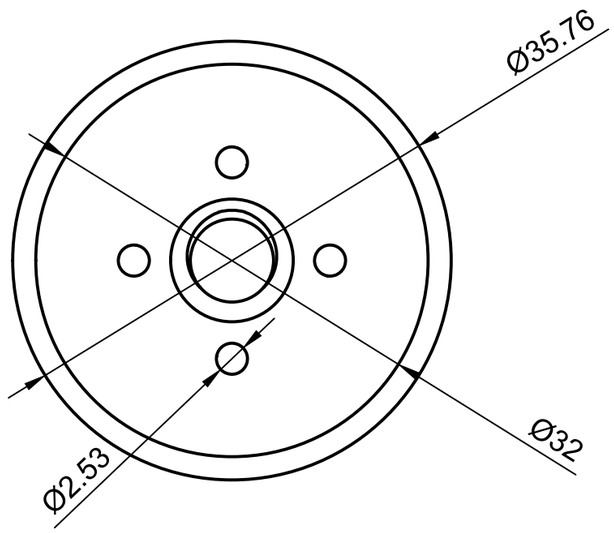

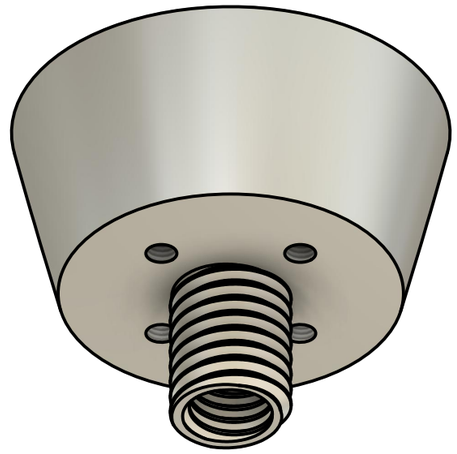

Dept.	Technical reference	Created by Aasit Vora	Approved by
All dimensions are in mm		Document type	Document status
		Title Nosetip Retainer	DWG No. 17
			Rev. / Date of issue / Sheet 1/1

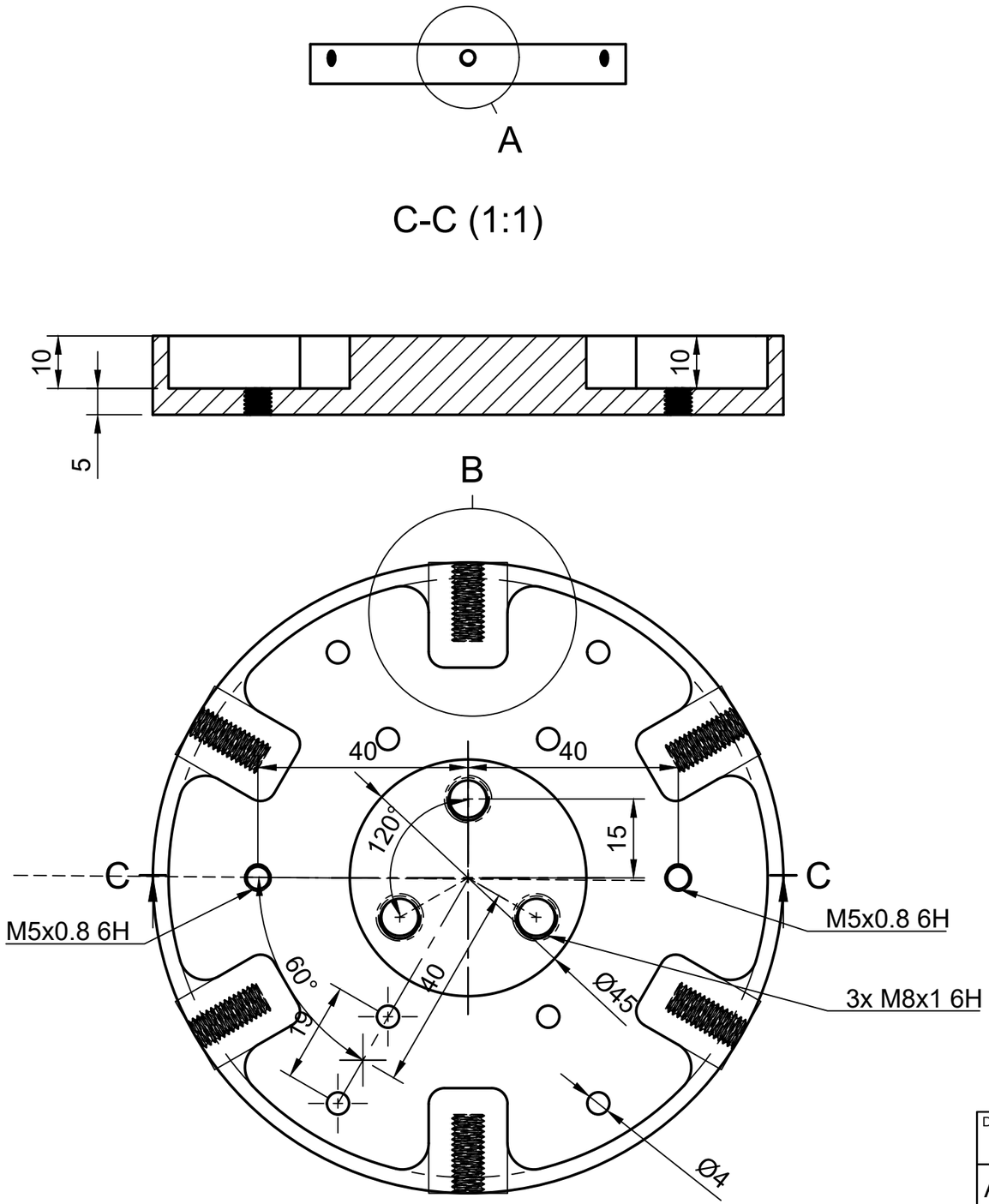

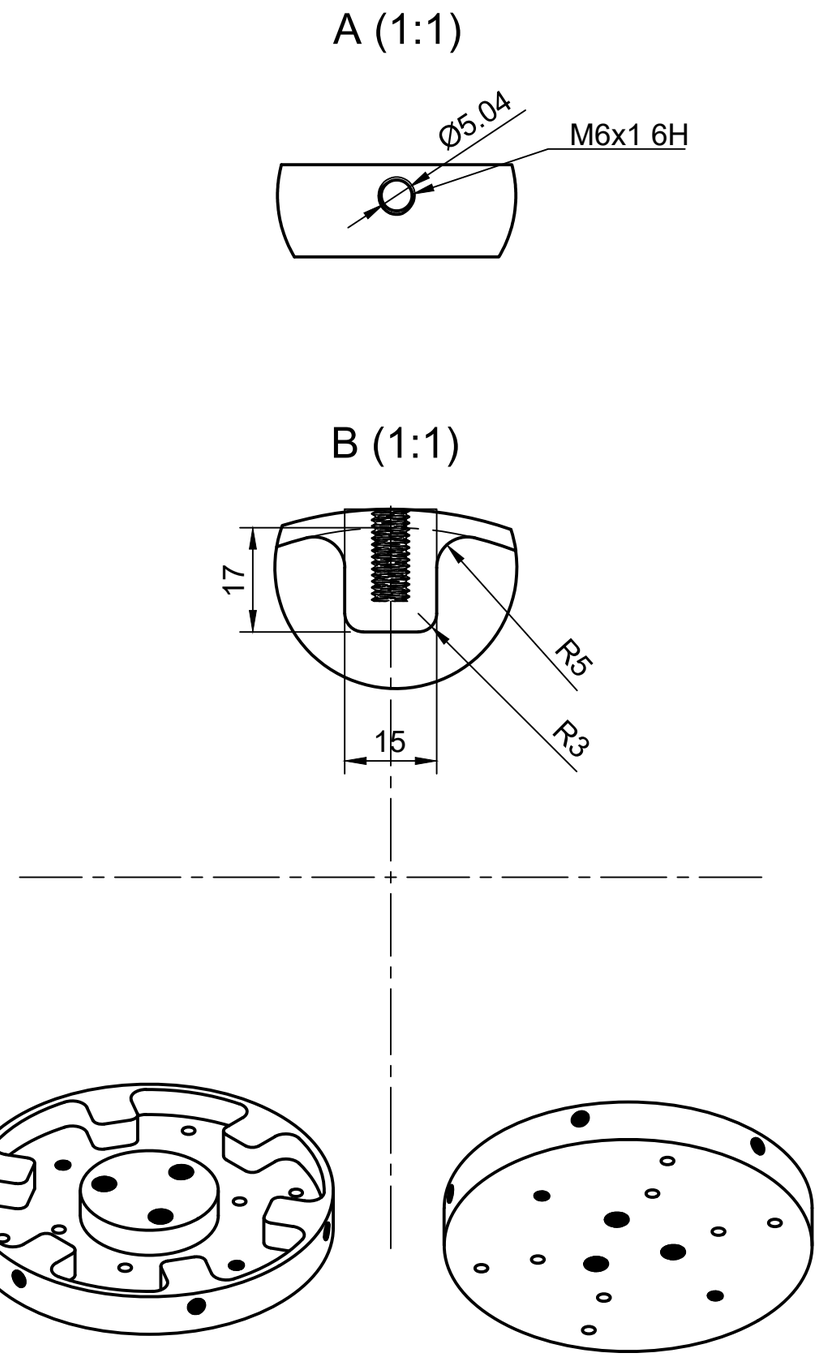

Dept.	Technical reference	Created by Aasit Vora	Approved by
All dimensions are in mm		Document type	Document status
		Title Recovery Bulkhead	DWG No.
			Rev. / Date of issue / Sheet 1/1

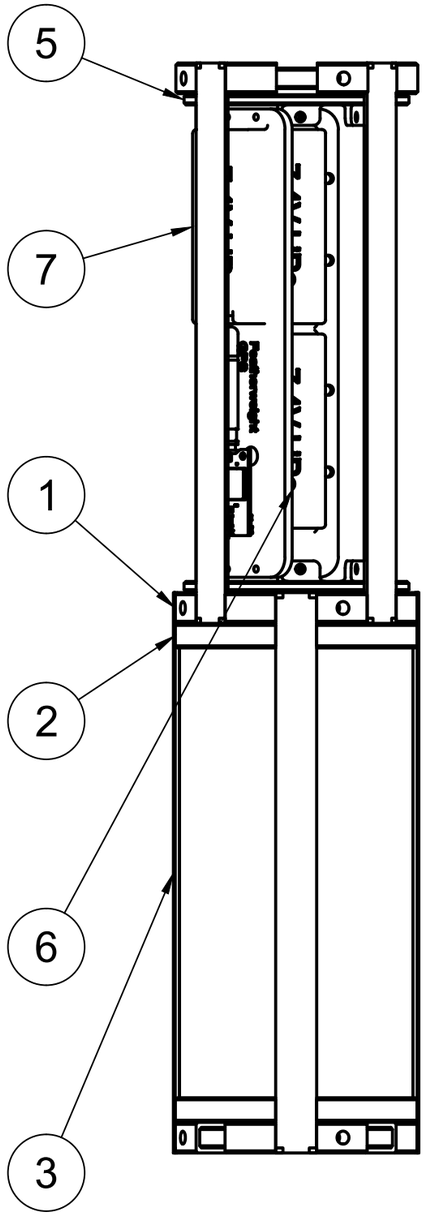

Parts List				
Item	Qty	Part Number	Description	Material
1	3	Electronics Stack Retention		ABS Plastic
2	1	Payload Assembly		Steel
3	8	3D printed Slits		ABS Plastic
5	2	Avionics Mounting Bracket		ABS Plastic
6	1	COTS Altimeter board		
7	1	GPS Sled		

Dept.	Technical reference	Created by Tanmay Kanmahale 7/10/2022	Approved by
		Document type	Document status
		Title Electronics stack assembly	DWG No.
			Rev. / Date of issue / Sheet 1/1

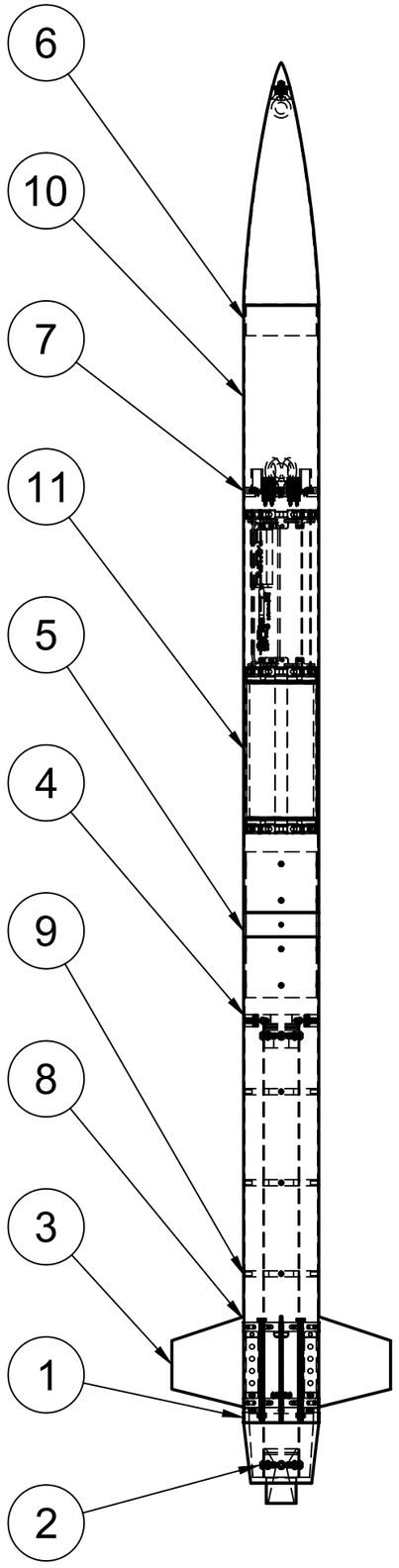

Parts List				
Item	Qty	Part Number	Description	Material
1	1	1 Boattail v17		ABS Plastic
2	1	Motor Casing		
3	1	Fins Assembly		
4	1	Thrust Bulkhead		Aluminum 6061
5	1	4 - COUPLER		Aluminum 6061
6	1	Nosecone assembly		
7	1	Recovery Bulkhead		
8	1	Booster Tube		GFRP
9	3	2 Centering Rings		ABS Plastic
10	1	Upper Airframe		GFRP
11	1	Electronics stack assembly		

Dept.	Technical reference	Created by Tanmay Kanmahale 7/10/2022	Approved by
		Document type	Document status
		Title Final Assembly	DWG No.
			Rev. / Date of issue / Sheet 1/1

Acknowledgments

The authors would like to thank the following for their contributions to the project:

KK Varsha Enterprise for helping the team with monetary funds when they needed the most

Madhu Enterprise for machining all metal parts associated with the project

Bliss 3D printing service for 3D printing PETG parts of the rocket

Carbonblack Composites for providing materials for composite manufacturing and safety equipments

Sinhgad College of Engineering for providing a workspace to work on the rocket and motor.

Engineering Bazaar for CNC machining the Nosetip and Tender Descender

Prof. Dhananjay Khankal for his technical and operational guidance in the project

Flomic Logistics for their assistance with shipping the rocket to Brazil

Organizers at Latin American Space Challenge for letting us participate in the competition and guiding the members with their technical expertise

PCBPower for their assistance in fabrication of PCBs for Avionics and Payload.

And lastly, **the Rocketeers at STES Rocketry**, to actively participate in an academically rigorous project and completing it in time

References

Periodicals

[1]Tim Van Milligan., "What is the best fin shape for model rockets," *Peak Of Flight*, ISSUE 442, May 2nd 2017.

[2]Zachary Howard ., "How to calculate fin flutter speed," *Peak Of Flight*, ISSUE 291, July 19th 2011.

[3]Tim Van Milligan., "What is an overstable rocket," *Peak Of Flight*, ISSUE 5.

[4]Ashley Van Milligan, "How to calculate fin flutter speed," *Peak Of Flight*, ISSUE 346,August 27th 2013.

[5]Tim Van Milligan., "Selecting rocket motors for your modelst," *Peak Of Flight*, ISSUE 40.

Books

[6]V.B Bhandari., *Design of Machine Elements*, 2nd ed.,Tata McGraw Hill, 2007, Chaps. 2, 7.

[7]Knacke, T.W., 1991, Parachute recovery systems design manual. Naval Weapons Center China Lake CA, Defense Technical Information Center.

Reports, Theses, and Individual Papers

[12]E. Brunner, H. Boross, E. Mingard, L. Amez-Droz, C. Nussbaumer, Q. Talon, N. Appfle, J. Triomph, M. Eckstein, M.Goury du Roslan, G.Herment, G.Locher, L. Giezendanner Swiss Federal Institute of Technology, EPFL, Lausanne, Switzerland, 2018, EPFL Rocket Team – MATTERHORN Project Team 35 Project Technical Report to the 2018 Spaceport America Cup.

[14]Pepermans, L., Menting, E., Rozemeijer, M., Koops, B., Dahl, N.S., Suard, N., Khurana, S., van Marion, F., Kuhnert, F. and Serman, M., 2017. Comparison of Various Parachute Deployment Systems for Full Rocket Recovery of Sounding Rockets, Comparison of Various Parachute Deployment Systems for Full Rocket Recovery of Sounding Rockets

[15]Rick Newlands, Martin Heywood, Andy Lee, 2016, "Rocket vehicle loads and airframe design," Aspirepace technical papers.

[16]Barrowman. J.S. and Barrowman J.A,1966, "The Theoretical prediction of the centre of pressure," NARAM.

[17]Dr. Gerald M. Gregorek., "Aerodynamic drag of model rockets," TR-11 Model Rocket Technical Report,

[18]Newlands, R., "Rocketry aerodynamics - Aspirespace technical papers," , 2016. URL http://www.aspirespace.org.uk/downloads/Rocketry%20aerodynamics.pdf.

Electronic Publications.

[19]Lostoski, Michael R. Mr; Szucs, Jeff; and Schwenning, Matt., "Structural Design and Fabrication of a Rocket," *Honors Research Projects. 387,* [online journal], URL: "Structural Design and Fabrication of a Rocket" by Michael R. Lostoski Mr, Jeff Szucs et al. .

[20]Tom Benson., "Rocket Stability," *Beginners Guide to Rockets* [online database], URL: NASA: Rocket Stability .

[21]Ricard Nakka., "Fins for Rocket Stability," *Richard Nakka's Experimental Rocketry Website* [online database], URL: Nakka's Experimental Rocketry Site .

[22]Tom Benson., "Area Formula," *Beginners Guide to Rockets* [online database], URL: Area .

[23]Tom Benson., "Shape Effects of Drag," *Beginners Guide to Rockets* [online database], URL: Shape Effects on Drag .

[24]"U.S. Standard Atmosphere," *The Engineering Toolbox* [online database], URL: US Standard Atmosphere Air Properties - Imperial (BG) Units .

[25]Tom Benson., "Rocket Principles," *Beginners Guide to Rockets* [online database], URL: Rocket Principles - Nasa .

[26]Tom Benson., "Rocket Thrust," *Beginners Guide to Rockets* [online database], URL: Rocket Thrust .

[27]Tom Benson., "Four Forces on a Rocket," *Beginners Guide to Rockets* [online database], URL: Four Forces on a Rocket .

[28]"Table of design properties for metric hexagonal bolts M5 to M39" *EurocodeApplied.com.* [online database], URL: Table of design properties for metric steel bolts M5 to M39 - Eurocode 3 .

[29]"Metric steel bolts, screws and studs - proof and tensile strength," *The Engineering Toolbox* [online database], URL: Metric Steel Bolts - Grades and Property Classes .

[30]Daniel Cavender, "NASA High Power Rocketry Video Series Counterpart Documents, [online database], URL: High Powered Video Series Counterpart Documents .

[31]PerfectFlight, "StratoLogger SL100 USer Manual," [online database], URL: SL100 manual version final .

Computer Software

[32]Ansys, Ver Ansys Student, 2021, John Swanson Developer

[33]Open Rocket designing and simulation, Ver OpenRocket 15.03, 2021, Sampo Niskanen Developer

[34]Solidworks, Modelling, Assemblies and Drawing, Ver Solidworks 2020, Dassault Systems Developer

[35]EAGLE, Printed Circuit Board PCB Design, Ver Fusion 360, 2020, Cad-Soft Computer GmbH Developer

[36]Fusion360, Modelling, Assemblies and Drawing, Ver Fusion 360, 2020, Cad-Soft Computer GmbH Developer