Load Save

Team 90 Project Technical Report for the 2023 IREC

Tanmay Kanmahale[1], Girija Wale[2], Prashant Patil[3], Sahil Phule[4], Mukta Bahulekar[5], Swayam Sonar[6], Atharva Pingale[7], Atharva Jadhav[8], Dipesh Sonawane[9], Chitrarth Kadel[10]
Sinhgad Technical Education Society, Pune, Maharashtra, 411041

and

Dr. Dhananjay Khankal[11]
Sinhgad Technical Education Society, Pune, Maharashtra, 411041

Load Save is a rocket developed by STES Rocketry for entry in the 10,000 ft height target category with a solid propulsion system at the 2023 Intercollegiate Rocket Engineering Competition. Load Save is a 2.7m tall high-power rocket that features an M class CTI 2150-P solid motor and has a dual event reefing recovery system. Load Save carries a team-designed and built acoustic levitator payload "Levi" to study the doppler effect in a high-G environment.

[1] Student, Mission Supervisor, kanmahaletanmay@gmail.com
[2] Student, Project Manager, girijawale432@gmail.com
[3] Student, Systems Engineer, prashantamarsihpatil@gmail.com
[4] Student, Recovery, sahilphule2003@gmail.com
[5] Student, Avionics, mukta.vrwyu21@sinhgad.edu
[6] Student, Payload, swayam.yvupw21@sinhgad.edu
[7] Student, Aerostructures, atharva99pingale123@gmail.com
[8] Student, Analysis, atharvajadhav611@gmail.com
[9] Student, Operations, dipeshsonawane2212@gmail.com
[10] Student, Ground Station, chitrarth.kadel2003@gmail.com
[11] Faculty Advisor, Department of Production Engineering,dhananjay.khankal@sinhgad.edu

Nomenclature

Ai	=	*burn area of the propellant*
a	=	*cylinder diameter*
AR	=	*aspect ratio*
Br	=	*regression rate*
CD	=	*drag coefficient*
Cp	=	*pressure coefficient*
Cx	=	*opening force coefficient*
c	=	*chord*
cf	=	*thrust coefficient*
cr	=	*root chord*
$COTS$	=	*Commercial Off the Shelf*
c^*	=	*exhaust velocity*
d	=	*grain density*
DO	=	*parachute nominal diameter*
dt	=	*time step*
F	=	*thrust*
FD	=	*drag force*
F_{max}	=	*maximum thrust*
F_O	=	*parachute opening force*
F_x	=	*X component of the resultant pressure force acting on the vehicle*
F_y	=	*Y component of the resultant pressure force acting on the vehicle*
f, g	=	*generic functions*
g	=	*gravity*
G	=	*fin material shear modulus*
h	=	*grain height*
I_{sp}	=	*specific impulse*
It	=	*total impulse*
i	=	*variable index*
K	=	*trailing-edge (TE) dimensionless angular deflection rate*
Kn	=	*ratio of the burn area of the propellant to the area of the nozzle throat*
Kn_{max}	=	*maximum Kn value obtained*
K_p	=	*empirical constant*
l_e	=	*suspension lines length*
m	=	*rocket's mass without propellant*
m_p	=	*propellant mass*
n	=	*number of grains*
P	=	*pressure*
p_c	=	*average combustion chamber pressure*
p_{ext}	=	*external pressure*
R	=	*external radius of the grain*
r	=	*internal radius of the grain*
r_e	=	*nozzle exit radius*
r^*	=	*throat radius*
S	=	*parachute area*
$SRAD$	=	*Student Research and Developed*
$STES$	=	*Sinhgad Technical Education Society*
t	=	*fin thickness*
t_b	=	*burn time*
V	=	*terminal speed*
V_X	=	*opening relative velocity*
V_f	=	*maximum Mach number*
W	=	*weight*
ρ	=	*air density*
η_{cf}	=	*efficiency of the thrust coefficient*

I. Introduction

STES Rocketry is a team of passionate students from the Sinhgad Institutes in Pune, India, who are committed to advancing the field of rocketry. The team was founded with a clear objective of providing practical opportunities for students to learn about rocketry and gain experience in the design, production, and testing of engineering projects. The team is composed of students from a diverse range of fields, including computer science, electronics and communication, mechanical, chemical, and production engineering. This diverse mix of backgrounds has enabled the team to approach challenges with a multidisciplinary perspective, which has helped them develop innovative solutions to complex problems. The STES Rocketry team has made remarkable progress since its inception, with a range of impressive achievements to their name. Their focus on practical learning has enabled them to develop a wide range of skills, from the design and production of rocket components to the testing and optimization of rocket engines. Their passion for rocketry has also led them to participate in various national and international competitions, where they have showcased their skills and expertise. The team's primary goal is to compete in the Intercollegiate Rocketry Engineering Competition (IREC) at the Spaceport America Cup in 2023. This is a highly prestigious competition that attracts some of the best rocketry teams from around the world. STES Rocketry will participate in the 10,000ft COTS solid motor category with their Load Save rocket. To prepare for the competition, the team has spent countless hours in research, design, and testing. They have also worked closely with their mentors and industry experts to refine their design and ensure that their rocket meets the rigorous competition standards. Their Load Save rocket is a testament to their hard work and dedication, with a range of innovative features that are designed to maximize performance and ensure safe operation.

A. Motivation

The STES Rocketry team has achieved lot’s of experience in their past competitions, and now are preparing to compete for the third time in the 10,000 ft Commercial of the shelf motor category at the Spaceport America Cup. This is a challenging competition that requires exceptional skills and dedication to succeed. However, the STES Rocketry team is more than ready for the challenge. Team’s previous experiences have taught them valuable lessons and allowed them to refine their techniques, ensuring that they are better prepared than ever before. With each competition, they have continued to push the limits of what they can achieve, and this year will be no different. Their motivation to compete is driven by their passion for rocketry and the desire to continue improving and pushing the boundaries of what is possible. They are a team of individuals who are dedicated to achieving success, and they understand that success is not just about winning but about the journey to get there. As they prepare for this year's competition, they are driven by the excitement of what lies ahead and the opportunity to showcase their skills and abilities. They are motivated by the challenge of taking on the best of the best and proving that they are worthy competitors. The STES Rocketry team's motivation for this year's Spaceport America Cup competition is fueled by their passion for rocketry, their drive for continuous improvement, and their desire to take on the challenge of competing at the highest level. They are a team that is ready to give their all and make their mark in the world of rocketry.

B. Team Structure

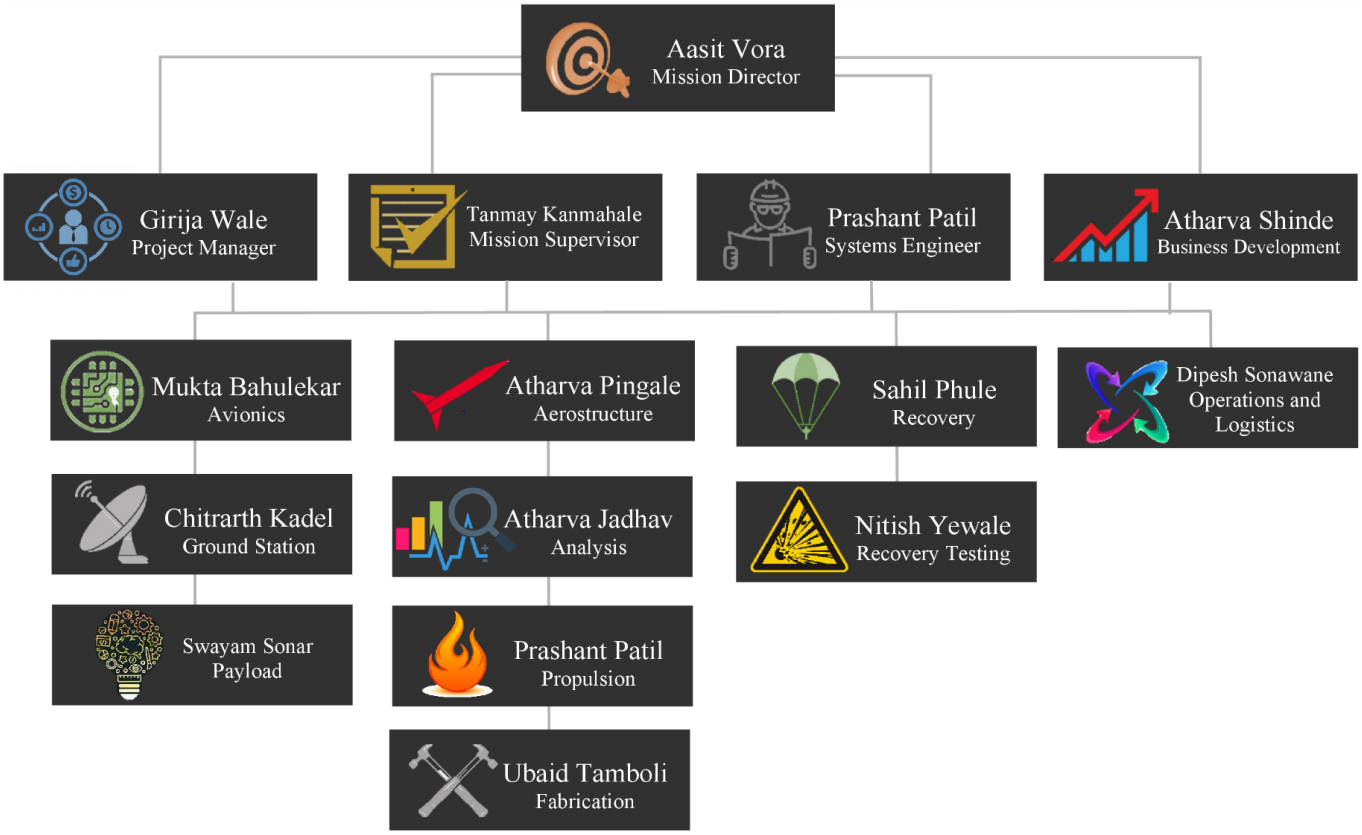

Figure 1: Team Structure

The team structure of STES Rocketry is meticulously planned and organized to ensure the successful completion of projects. To optimize accountability and efficiency, the team is led by a Project Manager and a Mission Director, who collaborate closely to supervise the team's overall mission and ensure the project stays on track to achieve its goals. Additionally, the team is broken down into technical subsystems, including Avionics, Aerostructures, Recovery, Ground Station, Analysis, Payload, Propulsion, and Fabrication. Each subsystem is led by a subsystem manager who is responsible for overseeing their respective technical areas. The Avionics subsystem is responsible for designing and integrating the electronic systems in the rocket, including telemetry, communication, and control systems. The Aerostructures subsystem focuses on the structural design and analysis of the rocket, including the airframe and fins. The Recovery subsystem is responsible for designing and testing the parachute recovery system that brings the rocket safely back after launch. The Ground Station subsystem designs and operates the ground-based systems that track and communicate with the rocket during flight. The Analysis subsystem performs simulations and analysis to ensure the rocket's design meets the project's requirements, while the Propulsion subsystem is responsible for designing and testing the rocket's propulsion system. The Payload subsystem designs and integrates the scientific and experimental equipment that the rocket will carry during its flight. Finally, the Fabrication subsystem is responsible for manufacturing the various components and subsystems of the rocket. In addition to these technical subsystems, STES Rocketry also has a Business Development team that plays a crucial role in managing the team's outreach and communication efforts. The business team identifies potential collaborators, sponsors, and stakeholders and establishes relationships with them to obtain resources, funding, and support for the project. To raise awareness of STES Rocketry's operations among the general public, the business team also oversees the team's social media and marketing campaigns. One of the strengths of STES Rocketry's team structure is its emphasis on collaboration and cross-functional communication. Each subsystem is responsible for their technical area, but they work closely with other subsystems to ensure that all aspects of the rocket's design are integrated and optimized. For example, the

Propulsion subsystem works closely with the Aerostructures subsystem to ensure that the rocket's structure can withstand the forces generated by the propulsion system. Similarly, the Avionics subsystem works closely with the Ground Station subsystem to ensure that the rocket's telemetry and communication systems can effectively transmit data to the ground. Another strength of STES Rocketry's team structure is its emphasis on project management and accountability. The Project Manager and Mission Director provide overall leadership and direction for the team, while the subsystem managers are responsible for ensuring that their subsystems meet their technical requirements and deadlines. Regular meetings and progress reports help ensure that the project stays on track and that any issues are addressed in a timely manner. Overall, the team structure of STES Rocketry is well-organized and precisely developed to guarantee the project's successful completion. The emphasis on collaboration, cross-functional communication, and project management ensures that the team can effectively design, build, and launch a rocket that meets its technical requirements and achieves its goals.

II. System Architecture Overview

The main systems of the project are described in this section of the Design Report. The following paragraphs provide information about the propulsion, aerostructures, recovery and analysis as well as the electronics and payload. Emphasis is given on the Special Design Features of Load Save that require more careful planning and vigorous testing to ensure safety during launch operations. Additional information is presented in the Appendices section.

Figure 2: Rocket Render Loadsave

A. Propulsion

The primary goal of propulsion is to have rigorous and dependable procedures for planning our projects and to introduce new methodology to rocket science in motor choices. This section of the study describes the approach used to choose a COTS solid rocket motor for our rocket LOADSAVE to accurately attain 10,000ft apogee.The selection method includes sensitivity analysis to improve knowledge of the correlations between rocket variables such as total mass, rocket motor total impulse, and apogee, which is the output variable. Following that, a trade-off analysis is performed between the propulsion, aerodynamics, and structural subsystems, and the final motor is chosen. As a result, this strategy presented various valuable alternatives during the design process, allowing us to switch to a motor refill kit as needed.

Team has decided to go with the CTI-M2150 Motor with the hardware from Aerotech which is Aerotech 75/7680. Team had to go with the cross loading due to unavailability of the CTI 75mm 6G hardware.

a. Motor Selection

Numerous motors were evaluated when choosing the ones for LoadSave, with a particular emphasis placed on those that use either CTI 75mm 6G hardware or AeroTech 75/7680 hardware. For each of these motors, the stability, rod clearance speed, maximum speed, and thrust to weight ratio were computed along with the approximate altitude

of the initial design. A comparison spreadsheet was used to assess the motor's price, weight, and size as well as other important factors. Many of the motors that were taken into consideration were eliminated because they couldn't give the necessary height of 11,000 ft, which will provide for enough wiggle room for errors in the motor's thrust curve and subsequent operations.The CTI M2150, which fits in the Aerotech 75/7680 and was chosen as the motor for full competition size launches because it offered a number of advantages over other motors that could launch to the requisite height. This motor offers the greatest thrust to weight ratio, enough stability, and fast enough rod clearance. Additionally, it has a smaller form factor than comparable M class motors, which frees up more space within the rocket for other internal parts like the payload despite its identical length. While it uses CTI Pro 75mm 6 grains, it can also be operated with Aerotech 75/7680 hardware by adding two spacers, allowing for airframe testing with the same hardware as the CTI M2150. This motor enables for a flying altitude of up to 10,600 feet.

Three primary steps are involved in selecting an effective solid rocket motor for a LoadSave. The first step is to establish the rocket's mission, which specifies the dependencies and needs of the subsystems. The COTS Rocket Motor Selection Flow Diagram (in Fig. 4) can aid in the design process for subsystems, however it does not represent the design phases. The following phase is to gather primary data on rocket mass, dimensions, and aerodynamic properties in order to determine a range of probable rocket weights, airframe diameters, and aerodynamic drag coefficients. Thrust-to-weight ratio, maximum velocity, maximum thrust, motor size, and burn time must all be evaluated while determining the best COTS rocket engine for the mission.. The second phase calculates the effect of different rocket motors on altitude for a given range of rocket masses. The total impulse, burn time, average thrust, propellant mass, and total motor mass of the motor are the independent variables. This entails doing a trade-off analysis to determine the best motor that fits all parameters and limits. The OpenRocket programme is used to do trajectory simulations with several COTS motors at the same time. The final and third step is selecting a motor that fulfills all of the parameters and results from the trade-off analysis. The propulsion engineer must check with the manufacturer and supplier to confirm that the motor is still accessible. In the case of the Spaceport America Cup, the propulsion engineer must also verify that the vendor in the United States can get the motor to the competition area on time.

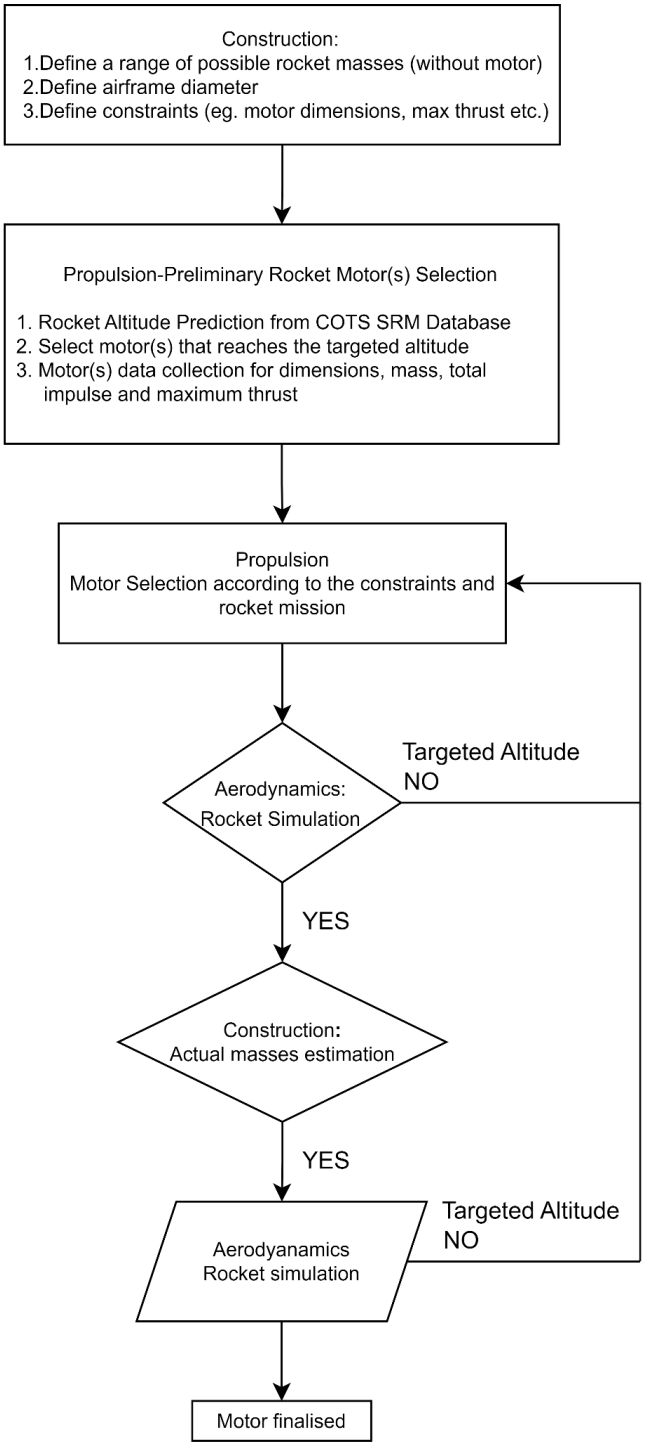

Figure 3: Motor Selection Methodology

b. Motor Overview

The thrust curves for the two motors that were initially chosen for Project LoadSave are included in Fig. 4, with CTI-M2150 being finalized for the launch at Spaceport America Cup 2023. Table 1 shows the average and maximum thrust of each motor, as well as the total impulse.

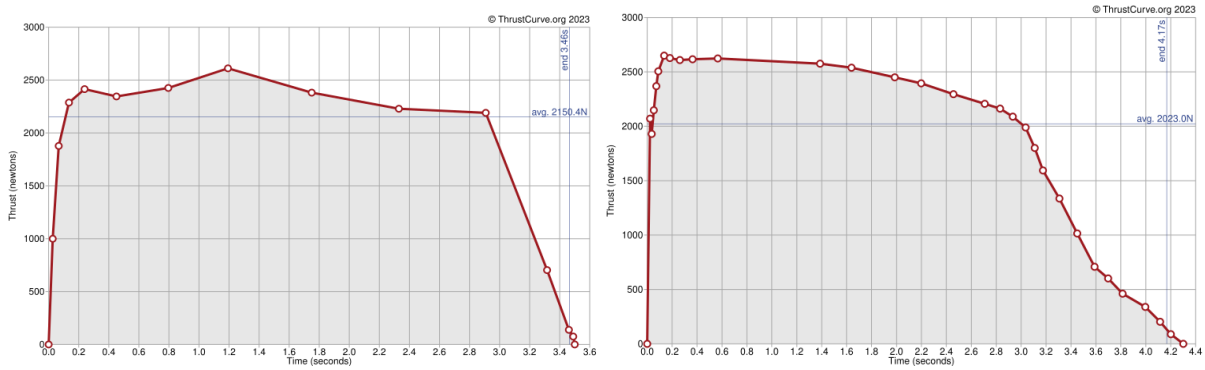

Figure 4: CTI-M2150 and CTI-M2020 (from left to right)

Table 1: Key Motor Parameters

Motor	Average Thrust (N)	Peak Thrust (N)	Burntime (sec)	Total Impulse (Ns)
CTI-M2150	2,147	2,614	3.5	7,455
CTI-M2020	2,021	2,680	4.2	8,429

B. Aerostructures

a. Design Abstract

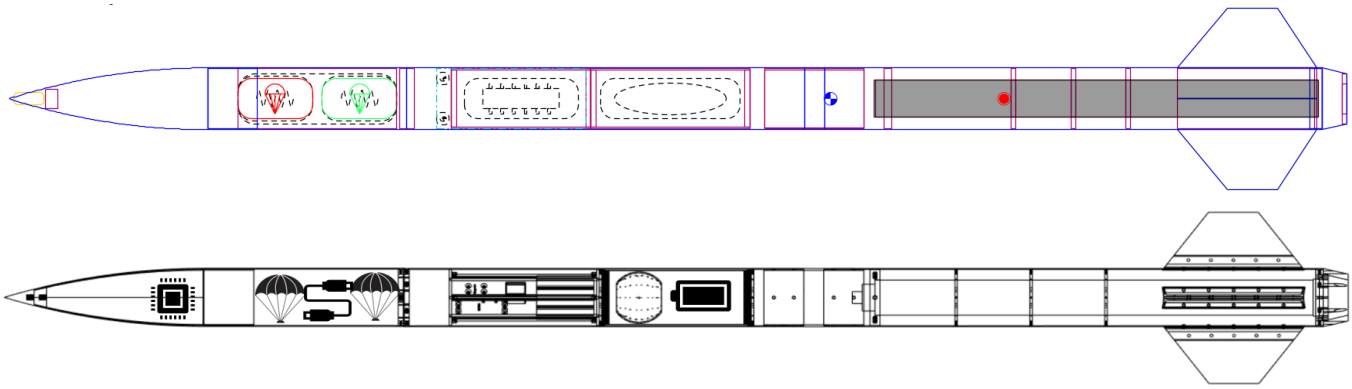

Figure 5: ORK and Wireframe Model of LoadSave

LoadSave is a 2.7 m tall rocket with an aspect ratio of 21.7:1, built from E-type fiberglass material on a cylindrical mandrel. The rocket's body is joined using two coupling mechanisms and a tail cone at the aft part of the rocket. The rocket is designed to provide a stable and efficient flight while carrying a payload to a predetermined altitude. The fiberglass construction provides durability and light weight, while the cylindrical shape and tail cone aid in aerodynamic stability. The coupling mechanisms ensure a secure attachment of the body components and allow for easy access to the interior of the rocket for maintenance and payload installation.

b. Couplers

This year, the team is using two types of couplers to connect the different parts of the rocket. A bulkhead coupler (which also acts as a recovery bulkhead) inspired by our 2019 model, the APJ-2, will be used to join the nosecone-parachute bay with the upper airframe and a tube coupler to join the upper airframe with the booster tube.

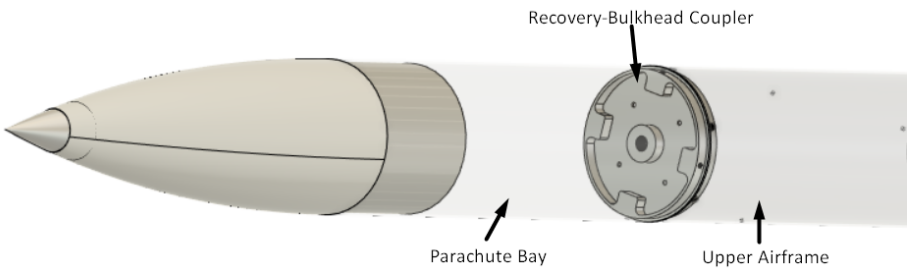

Figure 6: Bulkhead Coupling

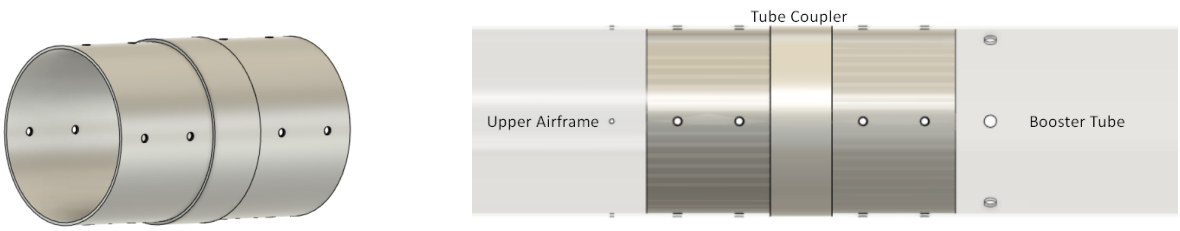

Figure 7: Tube Coupler and Tube Coupler Assembly

c. Bulkheads

The Load Save rocket features several bulkheads, including the Recovery-Coupler bulkhead, aft bulkhead, and thrust bulkhead, all of which are machined from aluminum 6061 material. These bulkheads play critical roles in the rocket's operation, separating different sections and withstanding high pressures and forces generated during launches. The aluminum 6061 material is chosen for its lightweight and high-strength properties, making it suitable for use in rocketry application.

- *Recovery-Coupling Bulkhead*

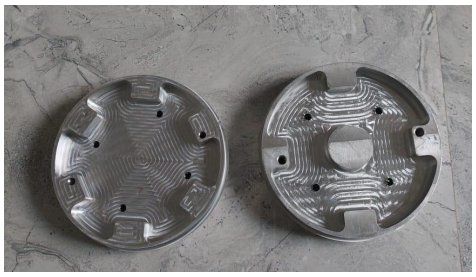

Figure 8: Recovery-Coupling Bulkhead

The Recovery-Coupling Bulkhead is a critical component that plays a dual role, acting as a recovery bulkhead and a coupler. The Recovery-Coupling Bulkhead is designed to withstand high pressures and forces generated during rocket launches. It is made of aluminum 6061 material, which is known for its lightweight and high-strength properties. The bulkhead is machined on a VMC, which allows for precise and accurate machining of complex shapes. The Recovery-Coupling Bulkhead offers several advantages over traditional bulkheads. It serves multiple functions, reducing the number of components required in the launch vehicle. This feature can reduce the weight and improve design optimization.

- *Thrust Bulkhead*

Figure 9: Thrust Bulkhead

The thrust bulkhead is a structural component of the rocket that is used to transfer the thrust produced by the rocket motor to the rest of the rocket. The design of the thrust bulkhead is critical to the success of the rocket propulsion system. The thrust bulkhead consists of a grove that is designed to fit the forward closure of the rocket motor. This ensures that the thrust produced by the rocket motor is transferred efficiently to the rocket. The thrust bulkhead plays a crucial role in the propulsion of the rocket. It ensures that the thrust produced by the rocket motor is transferred to the rocket structure without causing any damage. The thrust bulkhead is designed to withstand the high pressure and temperature that is generated by the rocket motor.

- Aft Bulkhead

Figure 10: Aft Bulkhead

The aft bulkhead is a structural component located above the boat tail of the rocket. It serves several important functions in the propulsion system. Firstly, the aft bulkhead is used to transfer load from the bottom of the rocket up to the thrust bulkhead and then rest of the fuselage through thrust bulkhead. This ensures that the rocket structure is able to withstand the forces generated by the rocket motor during launch. Secondly, the aft bulkhead is designed to support the motor during the recovery using an aeropack retainer. The aeropack retainer is a component that retains the motor during recovery. The aft bulkhead ensures that the motor is securely held in place and that it does not fall down during flight.

d. Nosecone

Figure 11: Load Save Ogive nose cone

Load Save consists of an ogive-shaped nosecone with a 3.22:1 fineness ratio and is manufactured using a 3D printed female mold and 240 GSM fiberglass. The ogive shape is a popular choice for nosecones due to its aerodynamic properties, which result in low drag and stable flight characteristics. The manufacturing process involved creating a female mold using the 3D printer and applying layers of 200 GSM fiberglass. The layers of fiberglass were allowed to cure before being removed from the mold. The finished nosecone was connected to the body tube using a shoulder, which helps to ensure a tight fit between the nosecone and parachute bay. The use of fiberglass and the 3D printing process allowed for a high degree of precision and repeatability in the manufacturing process, resulting in a nosecone that meets the desired specifications. Overall, the use of an ogive shape and the 3.22:1 fineness ratio, combined with the manufacturing process using a 3D printed mold and fiberglass, result in a high-performance nosecone suitable for use for this year's project.

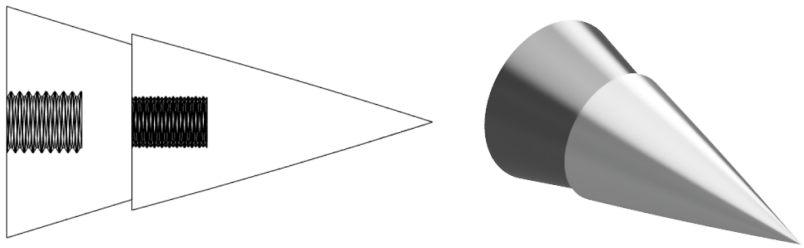

Figure 12: Nosetip Assembly Wireframe and Render CAD

An Aluminum 6061 Nosetip is used at the top of the nosecone of a rocket. Its primary function is to provide heat resistance and maintain a precise profile for aerodynamic efficiency. The 6061 aluminum alloy is commonly used for this purpose due to its high strength, good machinability, and excellent resistance to heat and corrosion. The nosetip is typically held in place by a nosetip retainer, which is designed to fit securely onto the nosecone. This retainer holds on to the nosecone by friction fit, and it also have a locking mechanism to prevent the nosetip from separating during flight. To connect the parachute, an M8 threaded rod is passed through the nosetip retainer, and an eyenut is attached to the end of the rod. The eyenut provides a secure attachment point for the parachute's quick links. The tip and retainer is CNC manufactured.

e. Fins

Load save's trapezoidal fins are an essential part of this year's rocket design which is use to provide stability and control during flight. These fins are made from 3mm thick aluminum sheets of 6061 grade and are manufactured

using laser cutting technology. These fin's are designed to fit snugly onto the rocket's body and are secured in place using M6 Countersunk bolts and screws. These trapezoidal fins are carefully engineered to withstand the high stresses and temperatures experienced during launch and flight. Therefore, they are made from high-grade aluminum, which offers excellent strength and durability while remaining lightweight.

i. Fin Attachment

For the fin attachment, aluminum brackets are used. To attach the fins to both the aluminum brackets and the fuselage, M6 countersunk screws are utilized. Careful consideration for the thickness of the brackets was made to ensure that the screws can be easily threaded into them. After much consideration, the team has settled on a thickness of 4 mm. This thickness strikes a balance between ensuring that the brackets are robust enough to securely hold the fins and allowing for easy threading of the screws. For the manufacturing of aluminum brackets, a vertical machining center (VMC) is used.

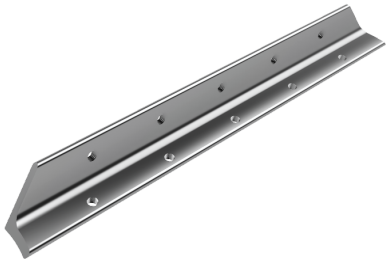

Figure 13: Aluminum Fin Bracket CAD

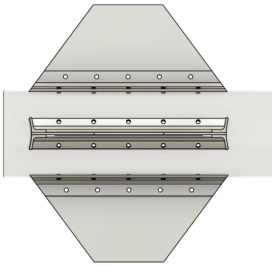

Figure 14: Fin Assembly

These brackets have been designed in such a way that they promote even flow separation, which is crucial for improving the aerodynamic performance of the launch vehicle. The use of M6 Countersunk screws provides the strength that is needed while also offering aerodynamic benefits. Additionally, this design simplifies the assembly process, which is essential for this year's project.

ii. Fin Flutter

Team utilized Aero FINSIM software to analyze the behavior of the fins during the flight of our rocket. The dimensions of the fins (refer table x for dimensions) were taken into consideration, and the software was able to calculate the flutter and divergence velocities. It was determined that the flutter velocity was 1.65 MACH, and the divergence velocity was 1.05 MACH. These values are critical to ensuring the safe operation of the rocket. During the flight of our rocket, the Mach number experienced did not exceed 0.83. As a result, the safety factor for flutter was calculated to be 1.98, and the safety factor for divergence was calculated to be 1.26. These safety factors provide an additional level of assurance that the fins will not experience any issues during the flight, which is of utmost importance for the success and safety of the mission.

Table 2:. Fin's Dimensions

Number of Fins	Root Chord	Tip Chord	Height	Sweep Length	Sweep Angle	Thickness	Fin Cross Section	Units
4	20	10	12	10	39.8	0.3	Square	Metric (mm)
4	11.02	3.93	4.72	3.93	0.69	0.11	Square	Imperial (inches,rad)

A fin can twist due to aerodynamic forces, but its elasticity resists it. At a certain speed, called the divergence speed, the elasticity can't resist enough, and the fin twists uncontrollably. Hence this year's Fin design is optimum and does not exceed the divergence and flutter speed. The additional results from software are shown in the table below.

Table 3: Aero-FinSim Software Additional Results

Divergence MACH	Flutter MACH	Lift Slop CN-α	G (psi)	Poisson Ratios	Density (lb/in^3)	f_bending (HZ)	f_torsion (HZ)
1.05	1.65	11.8614	3759398.3	0.33	0.098	169.876	202.404

f. Tailcone

The aft part of a rocket, also known as the boat tail or tail cone, is a conical structure located at the base of the rocket. It is designed to reduce base and pressure drag, which is the force generated at the rear of the rocket as it moves through the air. The boat tail is typically made from lightweight materials to reduce the overall weight of the rocket.

Figure 15: Tailcone CAD

In this case, the boat tail is 3D printed from PLA+ material. PLA+ is a type of thermoplastic that is commonly used in 3D printing due to its strength, durability, and resistance to heat. Using 3D printing technology allows for precise and complex shapes to be produced with minimal waste material, making it an efficient and cost-effective manufacturing process.

g. Component Analysis (FEA)

For component analysis, Autodesk Fusion 360 simulations were utilized to perform static structural analysis on the coupler and bulkheads. The aim was to evaluate their strength, deformation, and stress distribution under static loading conditions. The simulations were carried out using the Finite Element Analysis (FEA) approach, with a focus on identifying any weak points in the components and proposing suitable modifications to enhance their performance. The results obtained from the simulation revealed that the coupler and bulkheads were capable of withstanding the expected loads, with stress levels remaining within safe limits.

i. Environment Setup

Table 4: FEA Environment Setup Information Rubric

Environment Setup	Description
Hardware	A high-performance computer is used with a powerful processor, large RAM, and high-end graphics card.

Software	Autodesk Fusion 360 Simulation
Material Properties (For Aluminum 6061 as per software)	Density: 2.7E-06 kg/mm^3, Young's Modulus: 68.9 GPa, Poisson's Ratio: 0.33, Yield Strength: 275 MPa, Ultimate Tensile Strength: 310 MPa, Thermal Conductivity: 0.167 W/(mm C), Thermal Expansion Coefficient: 2.36E-05 /C, Specific Heat: 897 J (kg C).
Boundary Conditions	u = v = w = 0 is set for the component which has the bolted connections, where u, v, and w represent the displacements of the component in the x, y, and z directions, respectively. The zero displacement condition in all directions ensures that the component is fixed and does not move or rotate at the joint area.
Mesh Generation	Average Element Size: 10%, Element Order: Parabolic, Max Turn angle on curved mesh: 60, Minimum Element Size: 20%
Structural Loads	Structural Load is applied to selected geometry.
Post-Processing	Once the analysis is complete, post-processing is performed for changes made as per results.

ii. Coupler

a. Bulkhead Coupler

Von Mises

[MPa] 0.01 13.92

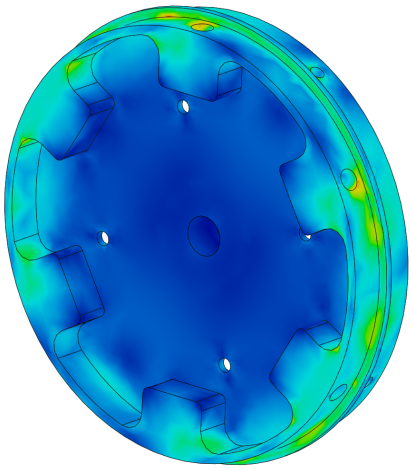

Total Displacement

[mm] 0 0.006009

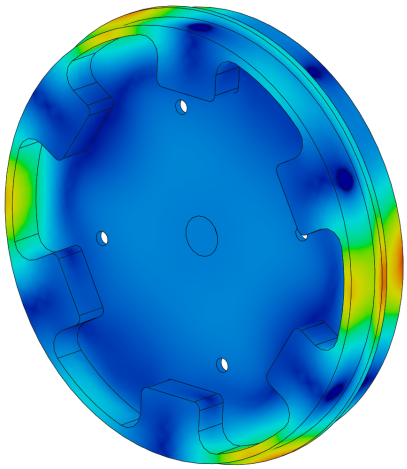

The FEA results indicate that the bulkhead coupler has a maximum stress of 13.92 MPa and a maximum displacement of 0.006 mm when subjected to a force of 3000 N. The stress is well below the yield stress of the material, indicating that the component is safe to use under this loading condition. The maximum stress of 13.92 MPa is well within the allowable stress limit for the material used in the bulkhead coupler. Therefore, the component will not experience any permanent deformation or failure due to this loading condition. Similarly, the maximum displacement of 0.006 mm is well within the acceptable limit and will not cause any significant change in the operation.

b. *Tube Coupler*

Von Mises

[MPa] 0.08 19.91

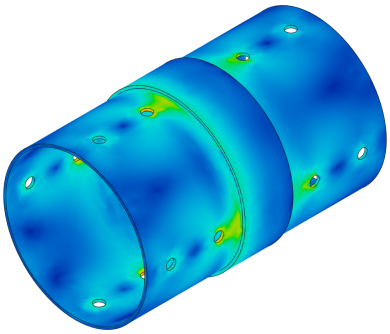

Total Displacement

[mm] 0 0.005797

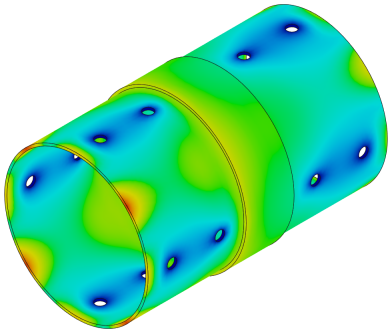

Based on the results of the static structural analysis, it is concluded that the coupler is capable of withstanding twice the force of the rocket motor (around 6 KN) without compromising the structural integrity. The safety factor of 13.81 indicates a significant margin of safety, providing additional confidence in the design. The maximum stress of 19.91 MPa and total displacement of 0.005797 mm are well within acceptable limits, indicating that the coupler will perform as intended during operation.

iii. Bulkheads

a. Recovery Bulkhead

Von Mises

[MPa] 0.1 100.8

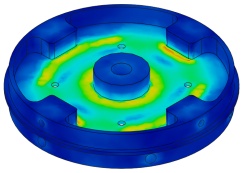

Total Displacement

[mm] 0 0.1973

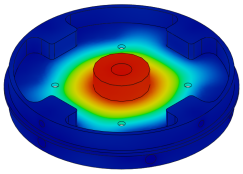

The recovery is designed to withstand the forces and stresses experienced during a parachute recovery system deployment. In order to ensure its structural integrity, the bulkhead has been subjected to a snatch force of 3 KN. The FEA results have shown that the recovery recovery has a safety factor of 2.729, indicating that the component can safely support 2.729 times the maximum expected load. This safety factor is well above the industry-standard safety factor of 1.5, ensuring that the component will not fail during deployment. It has also been revealed that the maximum stress experienced by the recovery bulkhead during the 3KN snatch force is 100.8 MPa. Additionally, the FEA results have shown that the displacement of the recovery bulkhead during the 3KN snatch force is 0.1973 mm. This small amount of displacement indicates that the component is able to maintain its shape and structural integrity even under high stress.

b. Thrust Bulkhead

Von Mises

[MPa] 0.1 17.37

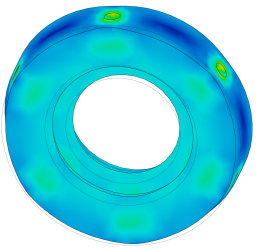

Total Displacement

[mm] 0 0.006483

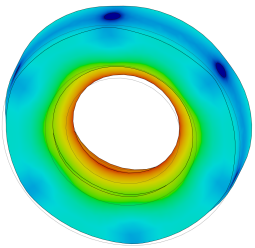

The maximum stress of 17.37 MPa is well within the allowable stress limit for the material used in the thrust bulkhead. Therefore, the component will not experience any permanent deformation or failure due to this loading condition. Similarly, the maximum displacement of 0.0064 mm is well within the acceptable limit. The FEA analysis shows that the thrust bulkhead is safe to use under a force of 6000N, which is almost double the maximum thrust generated by an M-class motor. The maximum stress and displacement are well within the acceptable limits, indicating that the component will not experience any permanent deformation or failure.

c. Aft bulkhead

Von Mises

[MPa] 0.03 13.02

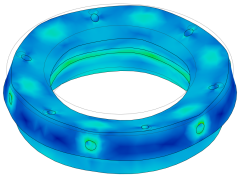

Total Displacement

[mm] 0 0.002724

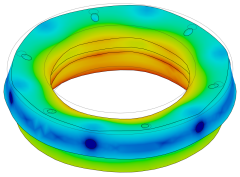

The FEA results indicate that the aft bulkhead has a maximum stress of 13.02 MPa and a maximum displacement of 0.002724 mm when subjected to the given load. The stress is well below the yield stress of the material, indicating that the component is safe to use under this loading condition.

h. Manufacturing

The manufacturing of rockets is a complex and expensive process, requiring the use of high-performance materials and advanced production techniques. The Load Save rocket is a launch vehicle designed to deliver payloads at 10.000 ft. This rocket is built using composite materials and metal alloys and additive manufacturing techniques. Even though most of the manufacturing is done in house, few of the components were machined outside due to unavailability of VMC.

i. Composites

Fiberglass is a type of reinforcement material used in composite materials, and it has several key features such as, high tensile strength, durability, lightweight, versatility, electrical insulation, and being cost-effective.

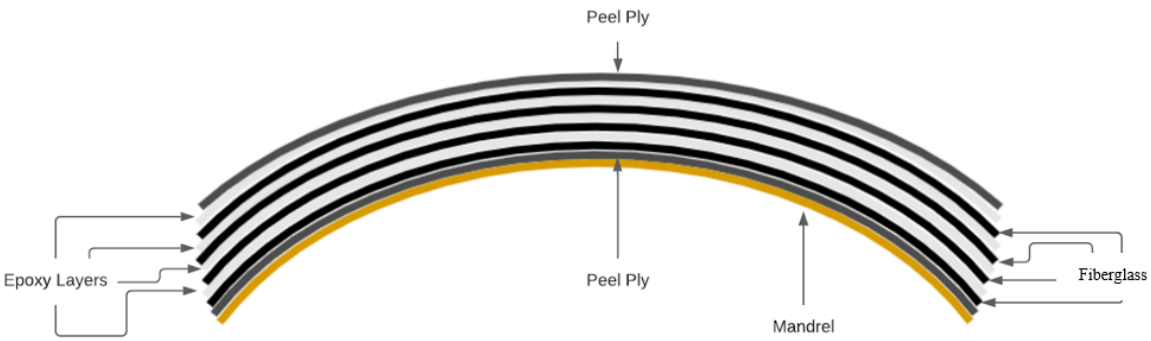

Figure 16: Fiberglass Composite Layup Process

Figure 17: Wet-Lay Up Process

Figure 18: Fiberglass Curing in Sun-Light

Figure 19: Nosecone with 3d Printed Female mold

For this year's project, the team utilized 400 gsm fiberglass for the fuselage and 240 gsm fiberglass for the nosecone, both of which were created using the wet layup technique. The fiberglass was paired with GP Epoxy laminating resin. The properties of both of the fiberglass materials used in the project are outlined in the table below.

Table 5: E Glass Fiber GSM differences

Property	400 gsm fiberglass	240 gsm fiberglass
Strength	Higher	Lower
Thickness	Thicker	Thinner
Rigidity	More rigid	More flexible
Durability	More durable	Less durable
Weight	Heavier	Lighter
Cost	More expensive	Less expensive
Heat resistance	Higher	Lower
Transparency	Lower	Higher

ii. Metals

The table below provides information on various metal components used in the manufacture of Load Save. It includes details on the manufacturing process and materials used for each component.

Table 6: Machining Techniques Information

Metal Parts	Manufacturing Process	Description	Raw Material
Nosetip	CNC Lathe	Nosetip is a conical metal component typically located at the top of a rocket. Manufactured using a CNC lathe, which is a machine tool used to produce cylindrical or conical shapes	6061 Aluminum Round Bar

		by removing material from a workpiece using a rotating tool.	
Nosetip Retainer	CNC Lathe	A metal component used to secure the nosetip in place. Manufactured using a CNC lathe	6061 Aluminum Round Bar
Aft Bulkhead	CNC Lathe	A metal component located at the rear of a rocket or missile. Manufactured using a CNC lathe	6061 Aluminum Round Bar
Tube Coupler	Lathe	Used to attach two separate bodies to the fuselage. Manufactured using a traditional lathe machine	6063 Aluminum round pipe
Recovery Bulkhead	VMC	It is a metal component used to attach parachutes and other recovery hardware to a rocket. Manufactured using a VMC, which is a machine tool used to produce a variety of shapes by removing material from a workpiece using a rotating tool.	6061 Aluminum Round Bar
Tender Descender	VMC	Line cutter device commonly used in rocketry for the recovery of rockets. Manufactured using VMC	6061 Aluminum Square Bar
Fins Attachment	VMC	Used to attach fins to a rocket. Manufactured using a VMC.	6061 Aluminum Square Bar
Fins	Laser Cutting	Fins are the metal components that are attached to the body of a rocket to provide aerodynamic stability. Manufactured using a laser cutting process, which uses a high-powered laser to cut and shape metal sheets into the desired shape.	Aluminum 6061 Sheet
Centering Rings	Laser Cutting	Centering Rings are laser cut and is used to hold motor in place.	Aluminum 6061 Sheet

Figure 20: From Left, Coupler on Lathe Machine, TD Pins on VMC, TD Pins and Base

iii. Additive Manufacturing

Additive manufacturing, also known as 3D printing, has revolutionized the manufacturing industry by allowing for the production of complex, customized, and lightweight parts with improved performance and reduced lead times. One area where additive manufacturing is gaining traction is in the production of high power rockets, which require precision-engineered components that can withstand extreme temperatures, pressures, and vibrations.

The team has produced the majority of its components for their project in-house by utilizing a 3D printer, specifically an Ender 3 model. The components were mainly printed using PLA+ material.

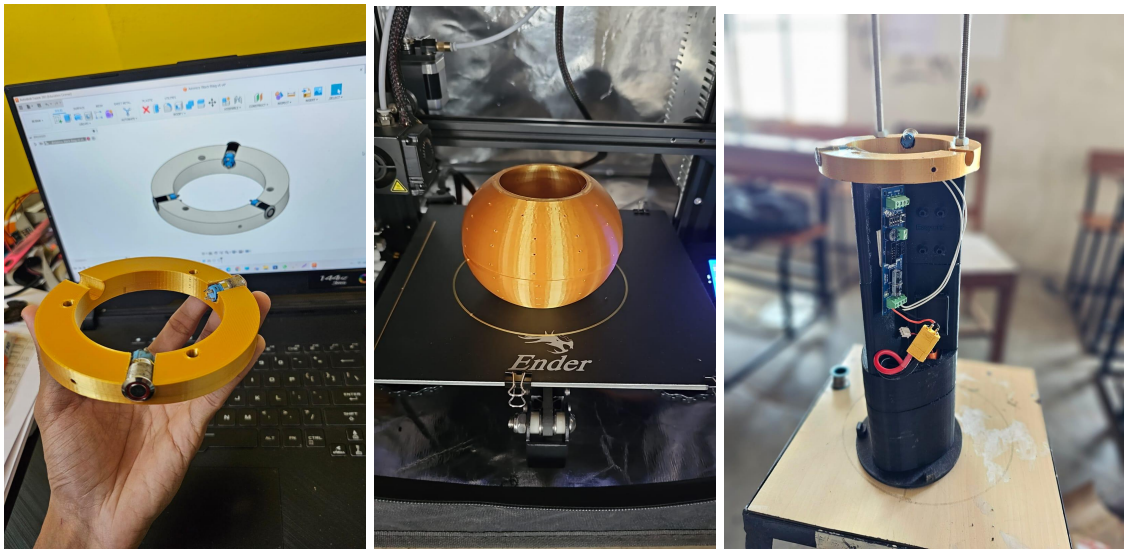

Figure 21: From Left, Avionics Bulkhead with arming switches, Payload Shell, Avionics Stack

Table 7: 3D printed parts infill information rubric

Component	Material	Print Time	Infill Percentage
Avionics Bulkhead	PLA+	3 hours	40%
SRAD Avionics Stack	PLA+	10 hours	50%
COTS Avionics Stack	PLA+	18 hours	50%
Payload Shell	PLA+	7 hours	40%
Boattail	PLA+	8 hours	40%
Nosecone Female Mold	ABS	23 hours	30%

C. Recovery

The recovery system goal is to safely land the rocket to the ground, avoiding damage to it's subsystems and guaranteeing the safety of the spectators. The required dual-stage recovery is achieved through a single-opening dual deploy system where 2 chutes get off a single opening. This configuration was chosen because it requires only one opening and one line cutter module. Additionally this technique was chosen as it was a new challenge for the team.

The ejection of the parachute is achieved through a set of primary and backup black powder charge deployed at apogee by COTS altimeters with a delay of 2 seconds. Post which comes down under drogue. At 1,500 ft, a line cutter assembly cuts the drogue line which makes it pull the main chute out of its bag, reducing the descent velocity even more.

Finally, in order to recover the rocker once it lands, the team will use both the GPS coordinates transmitted by the COTS GPS, and the dispersion of where it is expected to land, obtained by the trajectory simulation.

a. Parachutes Used

Two sets of COTS parachutes were used in this design, one elliptical drogue chute from fruity chutes deploying at apogee and has a 24" diameter with a Cd of 1.6. The drogue brings down the descent velocity to 27.1 m/s. And a main parachute from rocketman parachutes which has a 84" diameter and a Cd of 2.2 bringing the touchdown velocity to 6.13 m/s .

b. Ejection System

For drogue, 2 sets of 7g 2F black powder is used to pressurize the recovery tubes and eject the nose cone, and 1g 2F BP for the Line Cutter. This number was found experimentally by ground testing with different sized charges. For competition, additional ground tests will be performed on site with FFFFg black powder to figure out the exact size of the ejection system. For now, the team relies on online calculators to figure out the sizes, 2.12g and 0.4g respectively. For the backup charges, the nosecone charge will have an additional gram just to make redundancy slightly energetic, while keeping the line cutter charge the same.

c. Parachute Connections

The tubular nylon shock cords used in the rocket are total 11m in length used to keep the rocket sections together under descent. The connections are made such that none of the components that get ejected bump into each other.

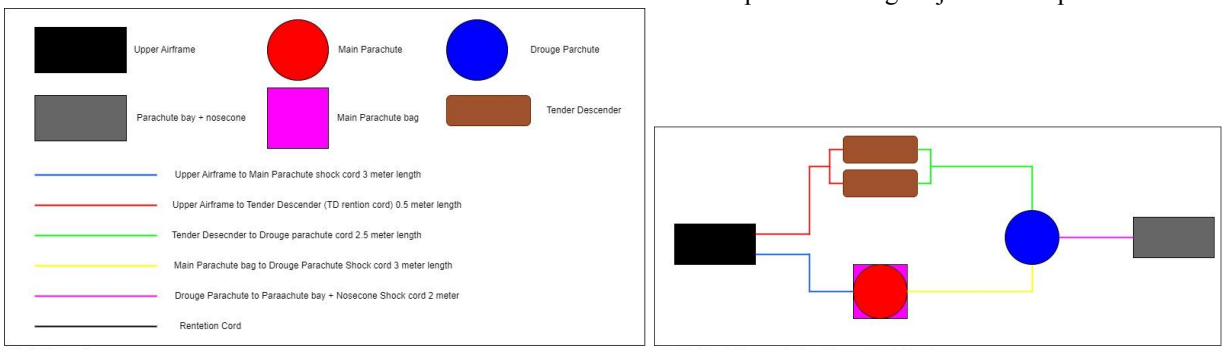

Figure 22: Recovery hardware connections and legends

The figures above explain how shock cords of different lengths connect together. Note the red line gets cut at 1,500 ft to pull open the main chute.

d. Disreefing Mechanism

At apogee, the nose ejects when the black powder triggers from the COTS altimeter's signal, all the recovery devices exit the nose section while staying tethered with the rocket by the shock cords. Under the drogue descent, the main chute stays inside the parachute bag, and stays limited by the line cutter assembly. At 1,500 ft, the 2 redundant tender descenders fire their black powder charges, with a time delay between them, and cutting the line between the drogue and the rocket. This makes the drogue pull out the main chute off its bag, bringing the touchdown velocity to a safe value.

The 2 tender descenders are connected such that either of the altimeters send the ignition signal, the charges would take off, and separate the drogue tethered with the rocket. Courtesy of Monash University for coming up with the design, the team opted to use a custom aluminium anchor connecting both the tender descenders designed in such a way that the line gets separated even if one of the charges fire, while also making sure the anchors don't slip off under the drogue descent which would create premature main deployment.

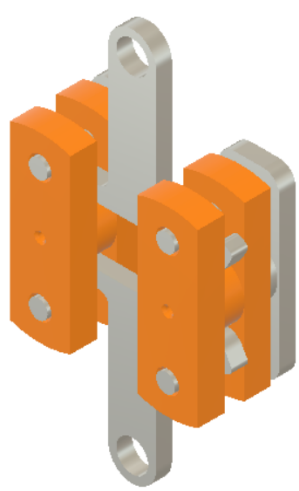

Figure 23: Parallel TD/Line Cutter assembly setup

e. Snatch Force

The snatch force was calculated with the following equation

$$F = \frac{1}{2} A C_d \rho_0 v^2$$

Where is C_d the drag-coefficient, ρ_0 is the air density, A is the reference area and v is the velocity of the rocket. Using this formula the snatch force due to the drogue chute is 61 lbs and snatch force due to the main chute is 760 lbs. Which can be easily sustained by the shock cord selected by the team.

D. Avionics and Ground Station

This subsystem plays a critical role in the control and guidance of the rocket, as well as in tracking and monitoring its performance throughout the flight. It includes a range of components such as microcontrollers, sensors, telemetry systems, power management solutions, communication systems and more. It is incharge of processing and interpreting data from various sensors, communicating with ground station.

a. COTS Hardware

Featherweight GPS (from Featherweight Altimeters) is our COTS GPS which works on a 33 cm wavelength band and 903 Mhz frequency. To ensure that the rocket is safely recovered, The team will rely on Commercial Off the Shelf (COTS) altimeters that detect the apogee and activate the drogue and main chute at the set altitudes. Specifically,the team will use the RRC3 and EasyMini altimeters from MissileWorks and AltusMetrum respectively for Load Save. The RRC3 is programmed to deploy the drogue chute at apogee, while the EasyMini triggers deployment 2 seconds after apogee. Both altimeters are placed on the Avionics Stack, and are set to deploy the main chute at a height of 1500ft for added safety.

b. SRAD Board

The Airborne Ace SRAD board is designed to provide accurate and reliable flight data to the team during rocket launch. It incorporates a range of sensors, including accelerometers, gyroscopes, and barometers, to measure various parameters such as altitude, velocity, orientation, and atmospheric pressure.Airborne Ace will only collect data for this iteration, but it also contains dedicated channels for releasing the parachute and other recovery systems, which may be used as our recovery altimeter in future launches if further testing are successful.

Figure 24: Airborne Ace

i. SRAD Board Specifications

Table 8: Specifications

Sr No	Component	Specification
1	ESP 32	Board's primary processor that manages all the operations and powers all the sensors
2	BMP280	Measures pressure, altitude and temperature
3	NEO-M8N GPS	Measures latitude, longitude and speed
4	MPU 6050	Measures acceleration and rotation
5	Mini SD Card Reader	Logs all the essential data into an SD card
6	Xbee S3b Pro	Rf module used for transmission and reception of data
7	BT-100 power amplifier	Amplifies the power to increase the gain for transmission
8	NPN transistors	Acts as a switch for main and drogue ejection
9	18650 3.7V Li-ion cells	Powers Airborne Ace

ii. DAQ

The Airborne Ace board serves as an excellent DAQ (Data Acquisition) unit that seamlessly captures crucial metrics such as pressure, altitude, temperature, latitude, longitude, and more from the diverse sensors integrated on it. The data collected is then securely stored on the onboard memory card to utilize it for future purposes. This allows the board to consistently maintain an accurate record of the various flight stages to support the respective events.

iii. Apogee Detection

The apogee detection system works by constantly monitoring the altitude of the rocket using the barometric pressure sensor. As the rocket ascends, the board keeps a vigilant eye on the altitude and compares it to the previous readings. In case the altitude starts to decrease, it triggers an algorithm that samples the next 15 values and calculates the average difference between the current altitude and the last altitude.

The reason to take average is it helps in adding an extra level of accuracy to confirm the ongoing descent stage of the rocket. If the average is smaller than zero, then the apogee is detected and though the deployment channels are not connected to any charge it swiftly springs into action and signals the deployment of the drogue chute, as it gets under 1500 ft it deploys the main chute ensuring a smooth and safe landing of the rocket.

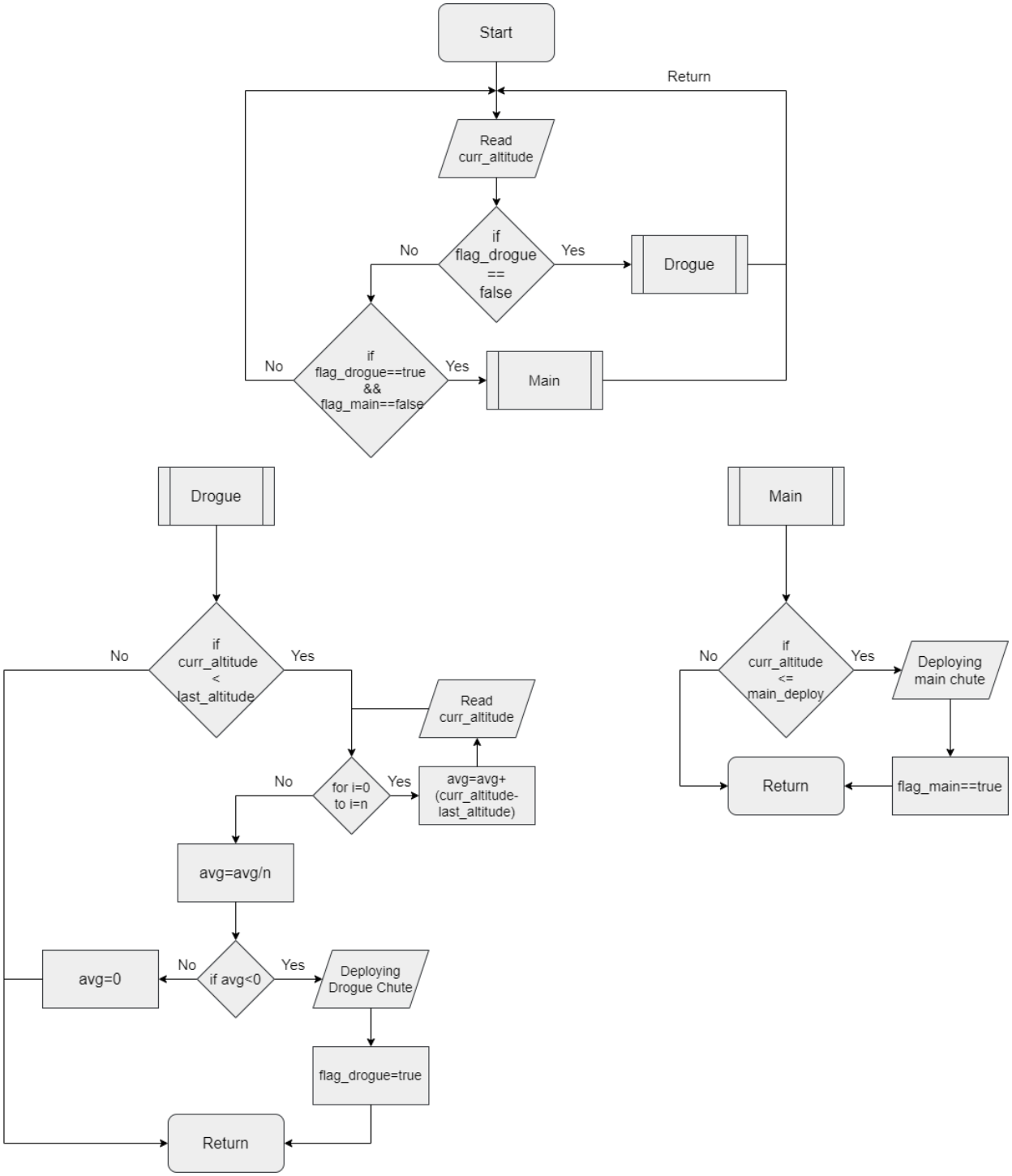

Figure 25: Apogee Detection Algorithm

iv. Hardware Narrative (about PCB)

Airborne Ace is a 2-layer Black Printed Circuit Board (PCB) with a sleek dimension of 80x70 mm. This high-quality board features two planes - the Power plane and the Ground plane - to ensure maximum performance and efficiency. With Airborne Ace, you can be assured of seamless connectivity and stable power supply in all your designs.

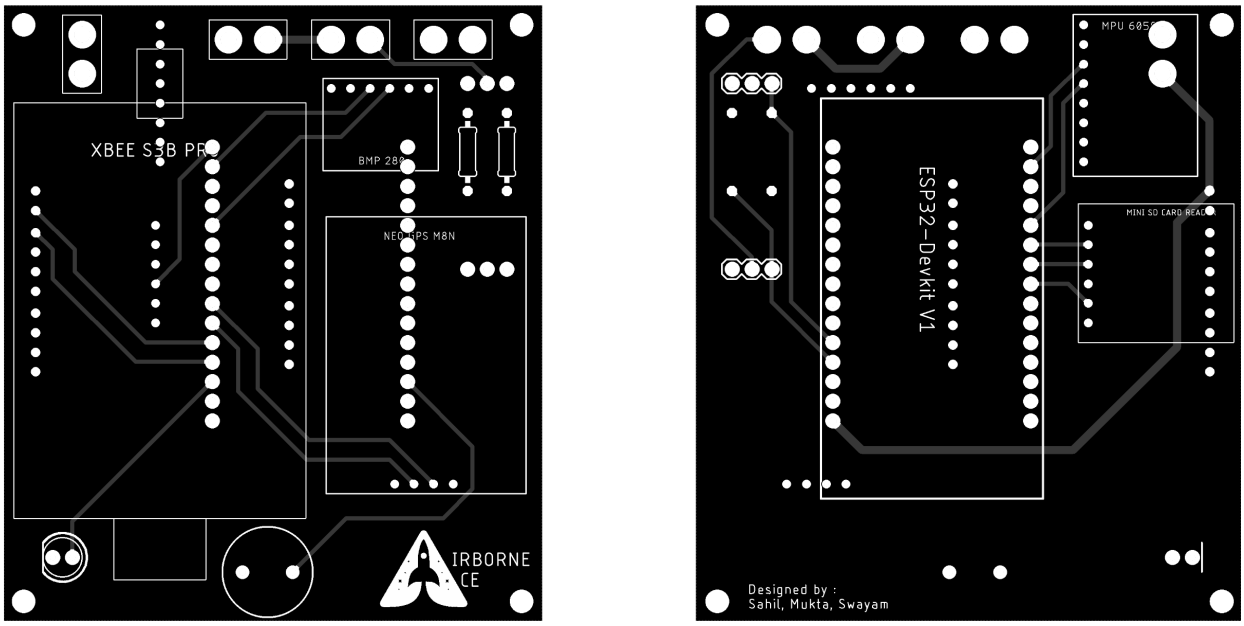

Figure 26: Airborne Ace PCB front and back

c. SRAD Telemetry

The main objective of the Ground Station subsystem is to view and analyze real-time flight data. The received data is visualized in Grafana using graphs, tables and charts. The transmission and reception are done by using the Xbee S3b Pro module. The ground station will receive data parameters such as altitude, temperature, pressure, speed, acceleration, latitude and longitude transmitted by Airborne Ace at a frequency of 900 MHz.

i. Telemetry Hardware

Acquired data is received using a 33cm Log-Periodic Dipole Array or LPDA antenna connected to an XBee Module, while the transmission is concluded using an omnidirectional antenna. This type of LPDA antennas have longer range and higher gain than standard Yagi and Omnidirectional antennas. A Nuand BT-100 bias tee power amplifier is attached in between the antenna and Xbee module for overall augmentation in the gain of transmission as well as recession. The XBee module will be connected to Airborne Ace for DAQ. Concurrently, the XBee module at ground station is set up with a handheld data processing device with the team. Even still in case of any issues with signal strength, the team also possesses a buck converter in hand which will amplify the supplied current to the antennas giving a slight augmentation to range .

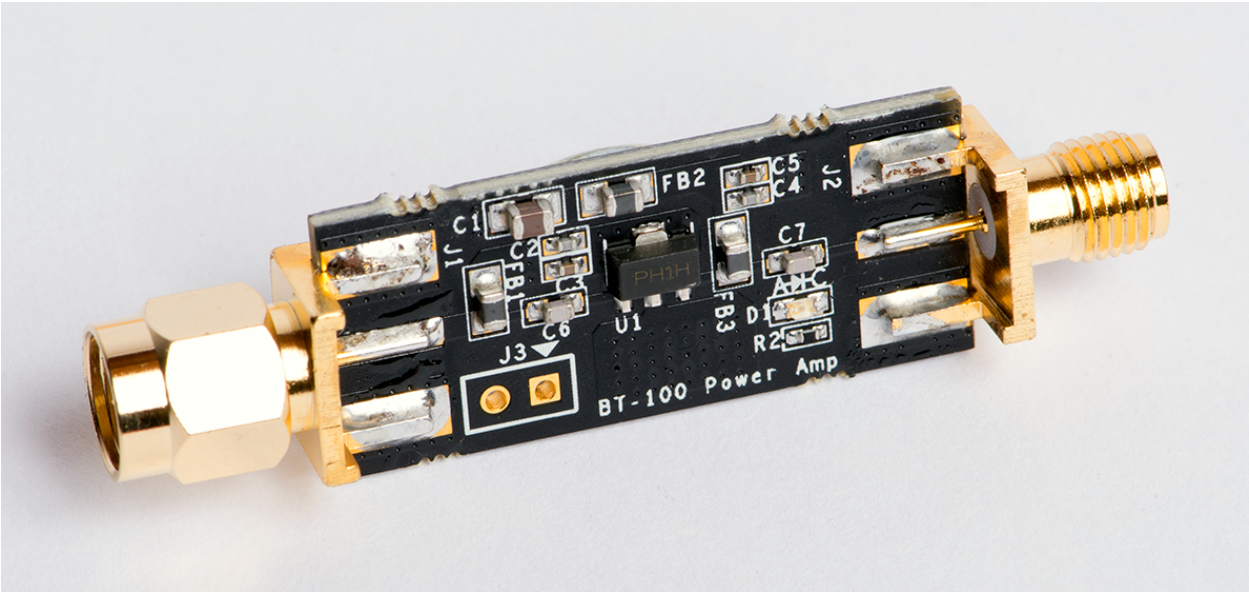

Figure 27: BT-100 Power Amp

ii. Telemetry Software

Telemetry software interfaces the team's flight computer's Xbee module and our dashboard. It works in 3 different parts:

- Conversion of raw data into variables
- Database management of those variables
- The visual interface of the collected data

For the conversion of raw data received by the XBee module into processable variables, "NODE-RED" software is used. Node-Red is an IOT interface software which allows the user to connect to IOT devices in a "No-code" manner. Similar to a flow chart where each flow is a module on its own, node-red splits the raw buffer data into separate variables and logs them into our database. This software is also responsible to convert one data into another through physical formulae as soon as the signal is received, which is done through simple coding.

For database management, the team is using "INFLUX DB" which is a database management software which works on localhost making it more secure. Influx DB separates every data variable into separate tags and is easy to integrate with our visual software "GRAFANA".Though Influx DB already can visualize the received data into graphs and charts, it lacks the GPS monitoring system which would be crucial for satellite imaging of landed rockets and its position on handheld devices.

.

Figure 28: Airborne Ace data transmission

iii. Data Usage and Application (Dashboard elements)

The ground station software comprises two integral components- Grafana and InfluxDB. InfluxDB is a highly efficient database management system that ensures reliable storage, retrieval, and management of data. Grafana, on the other hand, facilitates the visual representation of the data collected through the telemetry system in an interactive dashboard interface. The dashboard interface provided by Grafana would allow us to track the rocket system in real-time by mapping the coordinates collected by the telemetry system. This feature not only ensures quick access to critical information but also helps in the detection of any anomalies or discrepancies in real-time.

As a measure of ensuring the accuracy of the data collected, every piece of information logged by the data logger would be cross-checked through the telemetry system, which would allow for the detection of any potential issues such as a corrupted SD card that may affect data accuracy. Moreover, the dashboard interface would also display the received coordinates on a map, enabling us to track the rocket in case of a successful landing or predict its flight path in the event of a mishap. This feature would undoubtedly prove beneficial in determining the possible causes of any anomaly observed during the flight.

Overall, the combination of InfluxDB and Grafana would provide a high-end ground station solution with top-tier data management and visualization capabilities, making it an integral component of our rocket launch system.

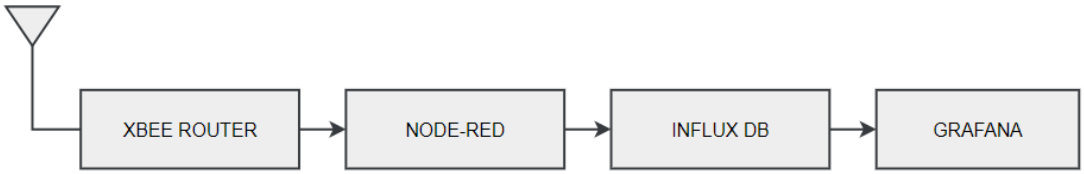

Figure 29: Ground Station setup for reception

d. Power Budget

To ensure reliable and redundant altitude measurement during flight, both the primary altimeter RRC3 and the backup altimeter EasyMini will be powered by high-performance 7.4 V 2200 mAh LiPo batteries. The SRAD board Airborne Ace, will be powered by two 18650 3.7 V Li-ion cells with a combined capacity of 4400 mAh, providing ample power for sustained operation. These carefully selected and dependable power sources will work in harmony to ensure the safety and success of the flight mission.

e. Wiring

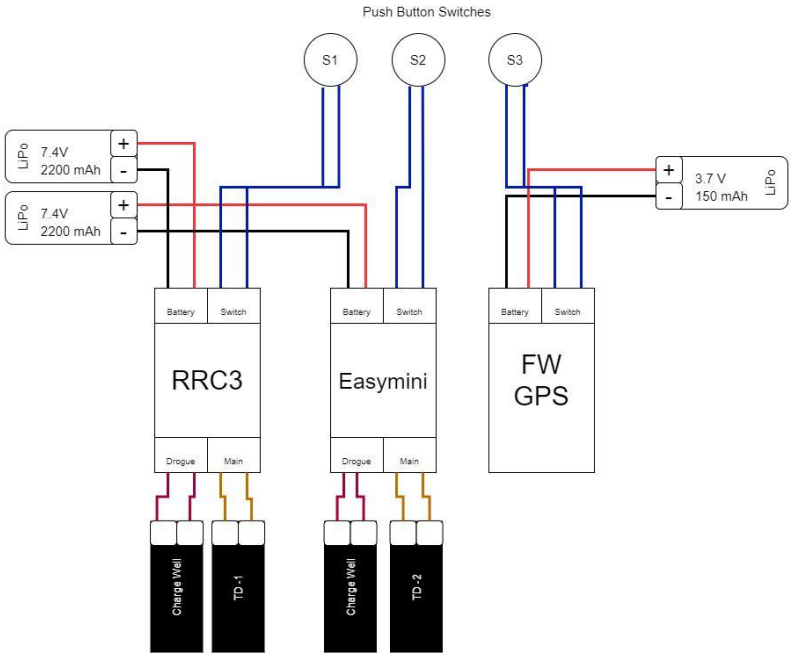

Figure 30: COTS Recovery wiring diagram

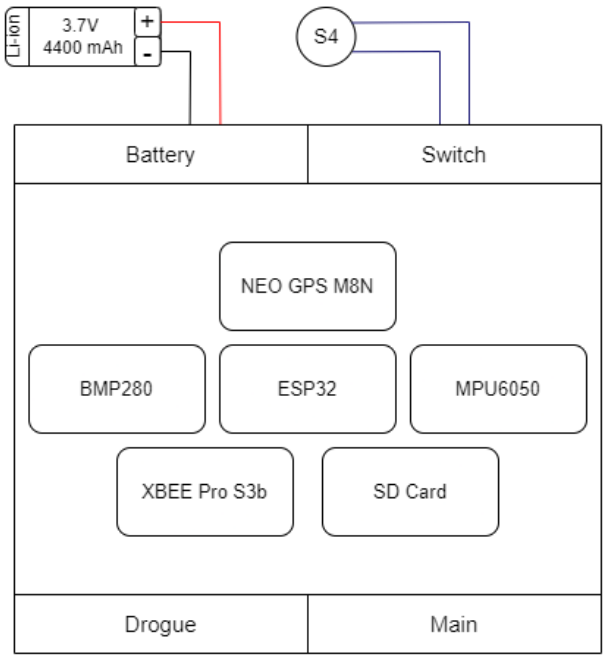

Figure 31: Airborne Ace wiring diagram

f. Hardware

The Airborne Ace board is composed of multiple sensors and other active and passive electronic components. The sensors utilized in this system are- BMP280 which measures pressure and altitude, the NEO-M8N GPS which

measures latitude and longitude, and the MPU 6050 which measures acceleration and rotation. The ESP 32 microcontroller powers and controls all of these sensors. All collected data will be stored on an SD Card using a mini SD card reader which will be used for further analysis. For telemetry purposes, the board employs an Xbee S3b Pro module. Additionally, the board features two NPN transistors for the drogue and main chute ejection.

g. Testing

COTS - The team has conducted a Vacuum chamber ejection test with an RRC3 altimeter.
SRAD - The team conducted various and variety of tests with the Airborne Ace flight altimeter which includes :

- Vacuum Chamber test.
- Static Nosecone ejection test.
- Free fall test.
- SIL simulation.

E. Payload

The function of the payload subsystem is to carry an acoustic levitator to an altitude of 10,000 feet, for studying Oobleck-like fluid (Non-Newtonian) or solid materials and acoustic levitation in an elevated environment of high thrust forces and low pressure; and its dampening properties on the object that would be levitated**.** The goal of the payload experiment includes the evaluation of performance of the levitation mechanism in order to promote future iteration and development of such scientific payloads.

a. Abstract

The **Project LEVI** is a non-Deployable Payload of an Acoustic levitator which is an array of ultrasonic transducers to generate a standing acoustic pressure field for exerting radiation force on small objects, allowing them to be trapped and relocated in three dimensional space.
With the purpose of using this knowledge to design a stable containment unit for hazardous or fragile materials that the team may put into the rocket, the appropriate data will be collected. The levitation works on the basis of standing waves and nodes-antinodes, hence and suitable ultrasonic transducer has been chosen to have frequency of 40 kHz with a gain of 112 dBm, nearly 32 such transducers are arranged in a center-oriented manner to make the pressure sufficient on the center by creating an epicenter.

As the altitude of the rocket increases, the internal air pressure will be suffering a decrease along with an instantaneous excessive increase in the thrust and hence, the structure of payload is designed in such a way that it will concentrate the entire air pressure on the center altogether to provide maximum amount of levitation on the levitating subject.

The team has planned to design a visual recording for the archival of appropriate data like vibrations in 3-dimensional space, amount of levitational strength on the object and hence the payload will be properly enclosed to make this possible with sufficient power usage. Appropriate amount of lighting is provided for better visuals along with a microcontroller connected to a motor driver for operating the power and making the overall power utilization as minimum as possible while operation.

b. Objectives

As per the goals defined by the team and design evaluation guide provided by ESRA, objectives of the payload subsystem include:

- Mass of payload does not fall below the margin of 8.8 lbs.
- The payload shall contain no hazardous materials for its operation.
- The onboard data of levitation should be recovered for post flight analysis.
- The power stack should keep the payload operational throughout the flight.

c. Design Overview

There are various kinds of levitators each with their perks and complications, the design of team's payload is inspired from "prolate spheroidal" shape which can be simply called as a "symmetrical egg" like, the reason for choosing this kind of design can be understood after comparing different kinds of design possible for the acoustic levitator. The main purpose of choosing the prolate spheroidal shaped design is to focus all the power at a single point; as the air pressure will decrease, all the power is centered at an epicenter so that the object keeps levitating, not to mention the high thrust forces it will counteract in the phase of power-on flight of the rocket.

The distance between two opposite plates of piezo-discs inside the ultrasound transducer must be a multiple of the wavelength of the sound the transducer produces. This produces a wave with stable nodes and antinodes.

Some waves can produce several usable nodes, but the ones nearest the transducer and reflector are usually not suitable for levitating objects. This is because the waves create a pressure zone close to the reflective surfaces.

In the microgravity environment the rocket will attain while power-on flight, the stable areas within the nodes must be large enough to support the floating object. Here on Earth, the high-pressure areas just below the node must be large enough as well. For this reason, the object being levitated should measure between one fourth and one third of the wavelength of the sound. Objects larger than these limits are too large to be levitated, i.e. the field is not large enough to support them. The higher the frequency of the sound, the smaller the diameter of the object which is possible to levitate. Objects that are the right size to levitate must also be of the right mass.In other words, establishing whether the sound wave can create enough pressure to counterbalance the pull of gravity on the object is required.

Considering the overall design of the levitator, a cylindrical metallic enclosure made out of Aluminum 6061 is covering the entire structure with operable lids from top and bottom where the arming system is placed at bottom lid. Two bulkheads are designed for supporting the levitator shell. The bottom bulkhead is also used for placing the electronics bay for operating the payload. The battery stack for payload is situated below the electronics bay, connected to an arming switch from bottom.

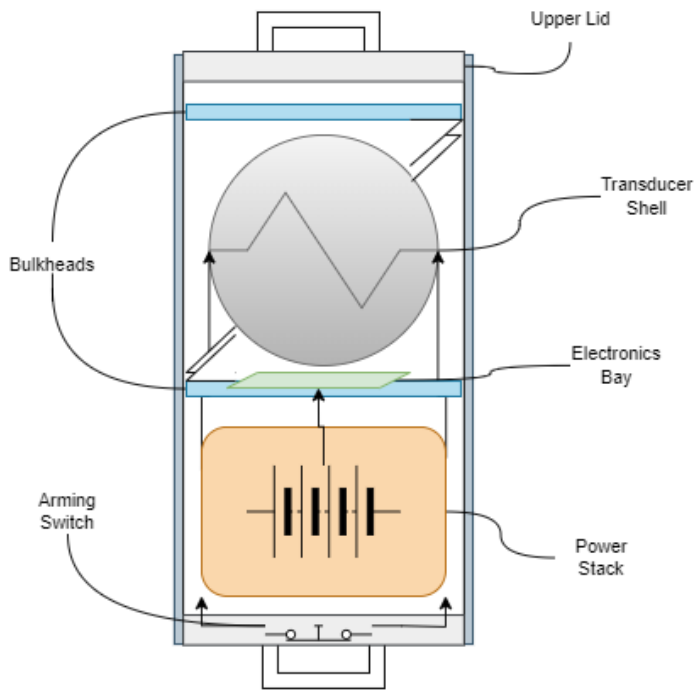

Figure 32: Structural Overview

The levitating shell and bulkheads are manufactured using PLA+ while the levitating object is concluded to be a styrofoam bead. The payload's outer casing is in charge of maintaining the project's structural integrity. Along with encasing the payload, it will also create an airtight atmosphere that will aid in solving issues as a result of a drop in air pressure.

d. Experimental setup

The overall setup consists of a Motor driver powered by battery supply which activates via arming systems. The motor driver powers Arduino Uno as well as the Transducer shell, controlled by analog operations of the onboard microcontroller. A HUSKYLENS OV2640 AI CAM module, used for data acquisition is connected to

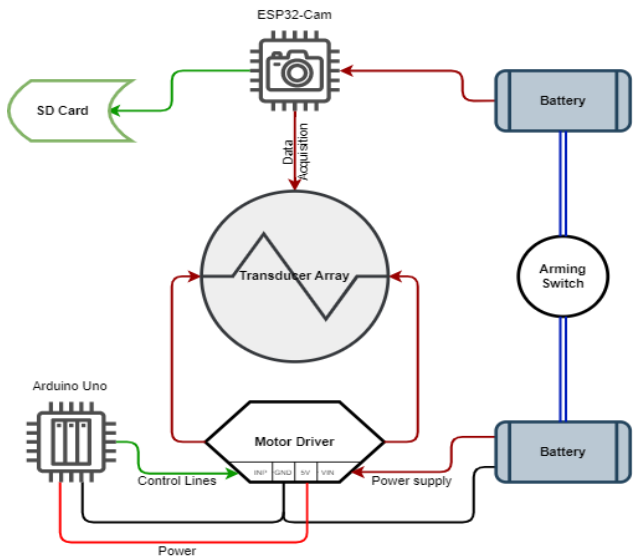

Figure 33: Experimental Setup

another battery set and is operated by the similar arming switch. Transducer arrays are connected to the output terminals of the motor driver with series connection wired as complete loop along them.

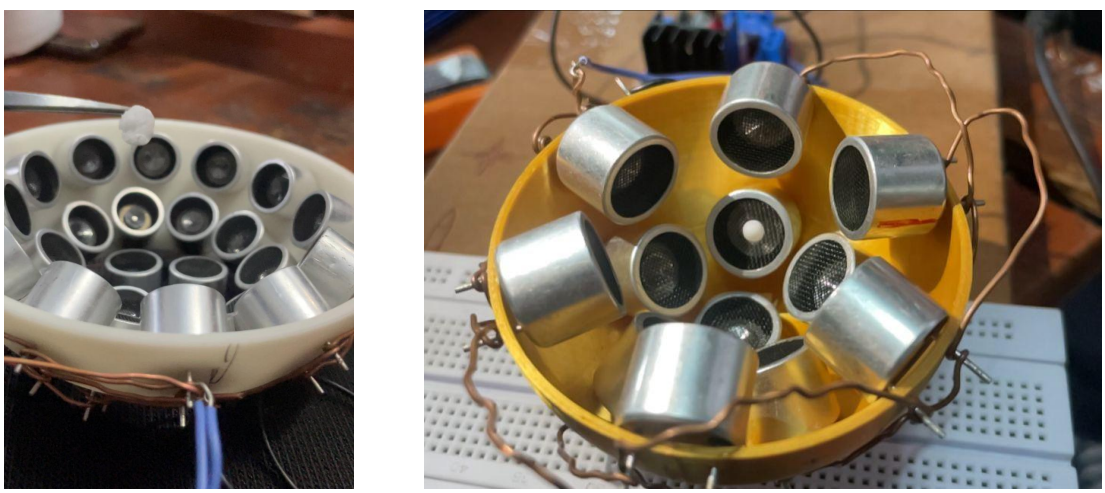

Figure 34: Testing Setup for different design iterations

e. DAQ

The DAQ is concluded with tracking of vibrations of the levitating particle using "HUSKYLENS-OV2640 AI cam module". The module has AI tracking and object training elements with which the levitating subject will be traced. The output of traced coordinates are stored in the memory stick of the onboard camera module in csv format. It will collect the majority of the data to display how the levitated object will be responding to high thrust forces and how the factors like doppler effect or variations in air pressure will affect it. A BMP280 sensor is suspended inside the shell to study the variations in air pressure due to nodes and antinodes created by ultrasound transducers.

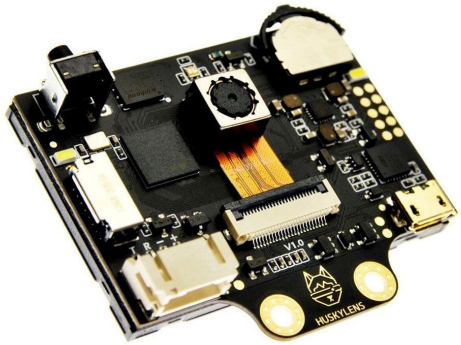

Figure 35: HUSKEYLENS OV2640 camera module

f. Power budget

For continued operation of the levitator, along with the electronics bay; Li-Po batteries with a capacity of 14.8V and 2500 mAh are connected to electronics. The DAQ module is using 5 volts at 230mA for continuous operation.The shell is expected to operate for 1 hour with peak current of 2600mA. The DC current supplied to the motor driver is converted to a psuedo AC supply by using internal flags of Arduino Uno. Thus, the motor driver is undergoing a drop in voltage by 35%. Hence, enough voltage is provided beforehand to ensure a successful payload operation throughout the flight.

F. Simulations

a. Numerical Analysis

To simulate the trajectory of the rocket, the team relied on the results of RocketPy, a 6-dof rocket simulator made by Project Jupiter. To create the simulation, multiple data sources were referred for this: OpenRocket and Fusion360 to accurately fin the CG points for the rocket and the motor. RasAero-II for drag values on the rocket when it's powered-on and powered-off. And the environment data for the launch site from ECMWF Climate data store.

After this, the motor was defined as an input for the rocket. With the motor defined, the physical and geometric parameters of the rocket were obtained using Fusion 360, where a model of the rocket was precisely created. With all the physical parameters created, the CAD optimized masses were fed to OpenRocket to calculate the overall CG of the rocket.

For the drag data, RasAero-II was used with the Rogers Modified Barrowman Equation and a x turbulence model after assessing the quality of the overall fuselage and the presence of additional buttonhead screws protruding out of the body. Feeding the data from OpenRocket and replicating that on RasAero-II, we got the power-on and off drag curve data for the simulation/

Before starting the simulation, three different scenarios were considered after assessing the possible failure modes: a nominal flight with chutes deployed at the right moment in time, a "main at apogee" scenario, and a ballistic flight. The parachutes described are the same as mentioned above. With that model, the most relevant simulation results are shown below by clubing data from RasAero-II and OpenRocket into RocketPy.

Table 9: RocketPy Simulation Results

Events	SI	Events	SI
Initial Static Margin	2.6c	Freestream speed at apogee	19
Static Margin at Burnout	3.33c	Time of disreefing	171.67
Launch Rail Departure Velocity	28.15	Altitude of disreefing	354
Time of Burnout	3.5	Freestream speed at disreefing	20.823
Altitude at Burnout	641.26	Time of impact	243
Apogee time	25.97	Impact vertical velocity	4.97
Altitude at Apogee (AGL)	3601.46		

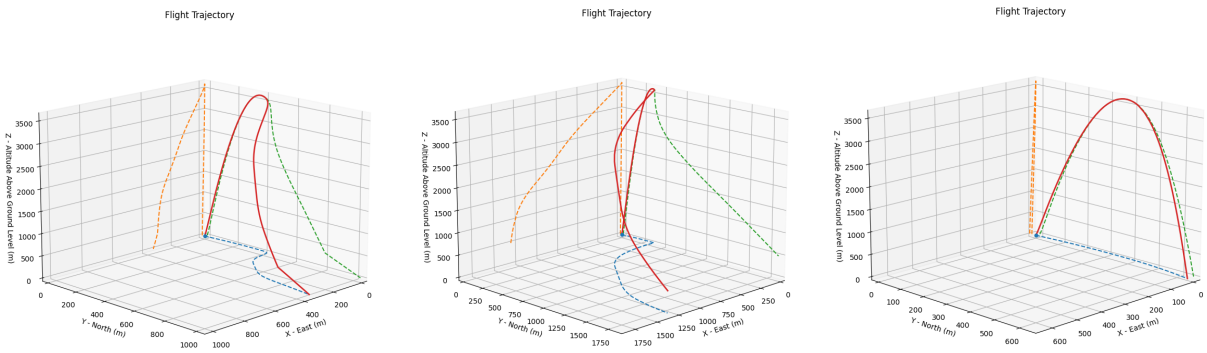

Figure 36: Load Save trajectory when (left to right) nominal, main at apogee, and ballistic

III. Mission Concept of Operations Overview

General ConOps

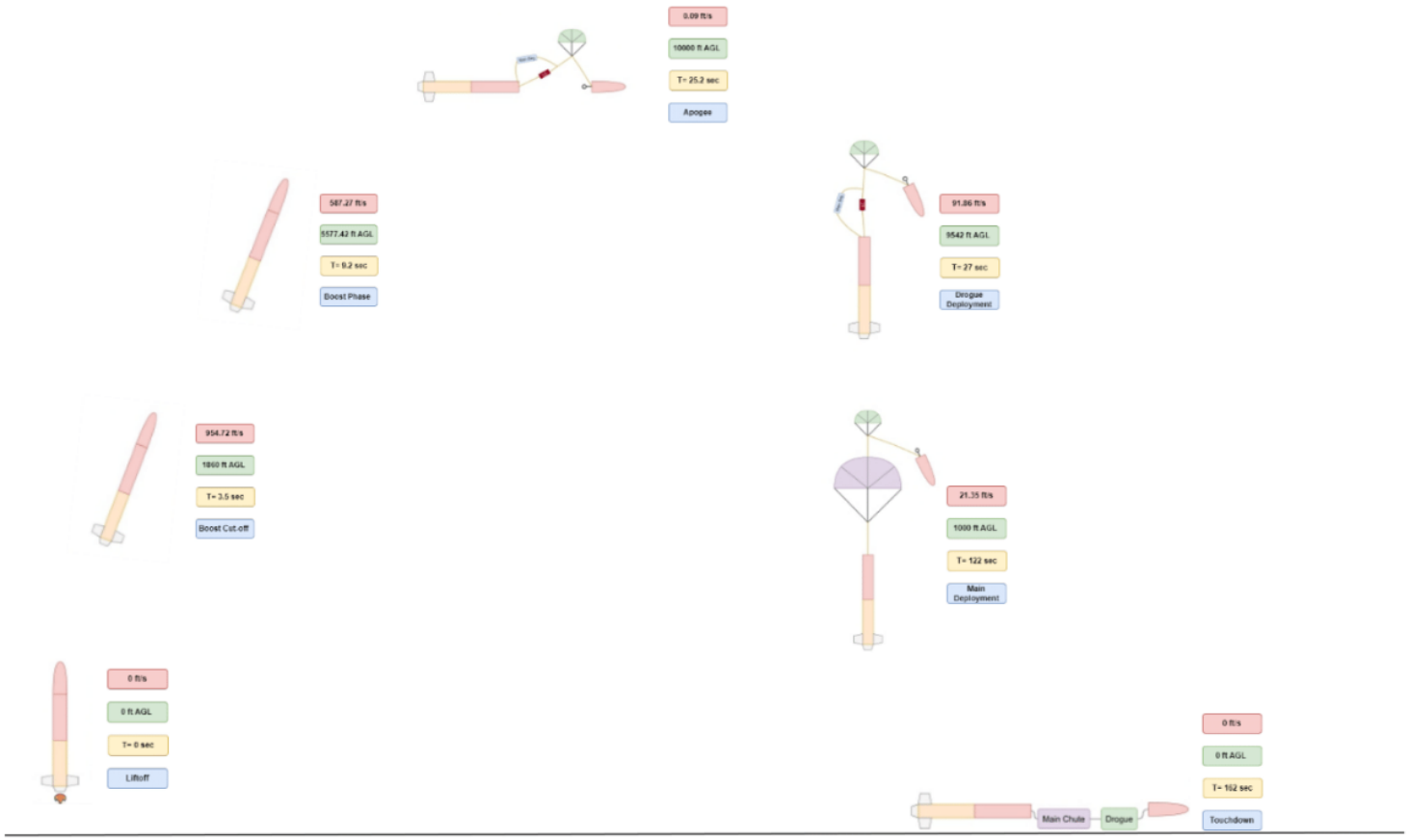

Figure 37: Mission ConOps

The operation of this rocket involves several key steps and concepts. First, before launch, the rocket is assembled in its main subsections - the fuselage, motor, and fins - at the launch preparation station, where all safety checks and inspections are completed. Once everything is ready, the rocket is launched using a suitable launch system and propulsion source. During ascent, the rocket's onboard altimeter tracks its altitude, velocity, and other key metrics. As the rocket climbs, it reaches its target apogee of 10,000 ft. At this point, the pilot chute is deployed. After the pilot chute is deployed, the rocket begins to descend towards the ground. The onboard altimeter continues to monitor the rocket's altitude, velocity, and other key metrics. At a predetermined altitude of 1500 ft, the main parachute is deployed. The main parachute is the larger of the two parachutes and is responsible for safely slowing the rocket down for landing. Once the main parachute is deployed, the rocket descends safely to the ground, slowed by the main parachute. Once it reaches the ground, it can be recovered and reused for future launches. Overall, the key concepts involved in the operation of this rocket include launch preparation, ascent, apogee, descent, and landing. The dual deployment system, with a pilot chute at apogee and a main parachute at 1500 ft, helps to ensure a safe and controlled descent for the rocket.

IV. Conclusion and Lessons Learned

Despite all the challenges, the team's mindset remained intact as each member went above and beyond to perform their tasks in order to assist the team achieve its objectives. During this time, we made significant progress both collectively and individually, gaining lessons that will help us better comprehend the enormity and complexity of creating a high-power rocket. The team recognised the mistakes made along the process and came to key insights that would be extremely useful in the future.

Firstly, it was determined that the start of the design was delayed because it began in October, and that it should begin during the late summers for convenience and efficiency.

Second, the team realized that relying solely on outside partners to manufacture some components would be inconvenient. To address this issue, it is proposed that we acquire some basic tools and equipment that will allow us to avoid relying solely on external sources, allowing us to include even more SRAD components in future projects. Aside from actual equipment, due to limited computational resources, new methods to reduce the required computational time are being considered and, in some cases, have already been developed.

The groundwork has been laid for new members to carry on and improve the experiments and integrated systems in the payload and avionics subsystems. Furthermore, due to the delays in various orders, it was determined that each subsystem should note every required component in advance and place every order as soon as possible.

Last but not least, some members are entitled to find solutions and guide the team through the bureaucracy and legislation issues regarding both test flights and recovery mechanisms tests

Appendix

Appendix A
SYSTEM WEIGHTS, MEASURES, AND PERFORMANCE DATA APPENDIX

Table 10: Rocket Parameters

Specification	Value	Target	Units
Airframe Length	2690	-	mm
Airframe Diameter	124	124	mm
Fin-span	120	-	mm
Dry Mass	14.6	-	kg
Propellant Weight	3.8	-	kg
Payload Weight	5	>4	kg
Wet Mass	20.99	-	kg
Number of Stages	1	1	-
Propulsion Manufacturer	CTI	-	-

Table 11: Flight Parameters

Specification	Value	Target	Units
Simulation Software	OpenRocket	-	-
Launch Rail Length	6	-	m
Launch Angle	3	-	degrees
Lift-Off Thrust to Weight Ratio	12.7	>5	-
Launch Rail Departure Velocity	33.4	30	m/s
Minimum Static Margin	2.61	>1.5	-
Maximum Acceleration	121	-	m/s^2
Maximum Velocity	328	-	m/s
Maximum Mach Number	0.9	-	-
Predicted Apogee	3408		m

Table 12: Propulsion Parameters

Propulsion Type	Solid
Manufacturer	CTI
Casing Size	75mm x 893mm
Class	M
Type	M2150

Total Impulse (N-sec)	7455
Peak Thrust (N)	2641
Average Thrust (N)	2147
Burn time (sec)	3.5
Propellant Weight (kg)	3.6

Table 13: Drogue Parachute Recovery Summary

Drogue Parachute Diameter (ft)	2
Drogue Parachute Drag Coefficient	1.6
Decent Velocity (ft/sec)	88.9
Deployment velocity (ft/sec)	101
Deployment acceleration (ft/sec^2)	32.18
Deployment velocity with 2 second delay (ft/sec)	63.97
Shock load (lb)	61

Table 14: Main Parachute Recovery Summary

Main Parachute Diameter (ft)	7
Main Parachute Drag Coefficient	2.2
Decent velocity (ft/sec)	19.6
Deployment velocity (ft/sec)	88.58
Deployment acceleration (ft/sec^2)	577
Shock load (lb)	416.374

Table 15: Main Parachute Shock Cord Specifications

Material	Nylon
Length (ft)	36.08
Width (in)	1

Breaking Load (lb)	4000

Table 16: Black Powder Specifications

Type	FFFF
Drogue Mass (g)	2.12
Main Mass (g)	0.4 (TD)
Drogue Backup (g)	3.12
Main Backup (g)	0.4 (TD)

Table 17: Shear Pin Specifications

Material	Size	Shear Strength
Nylon	M4	143 $\mathbf{lb_f}$

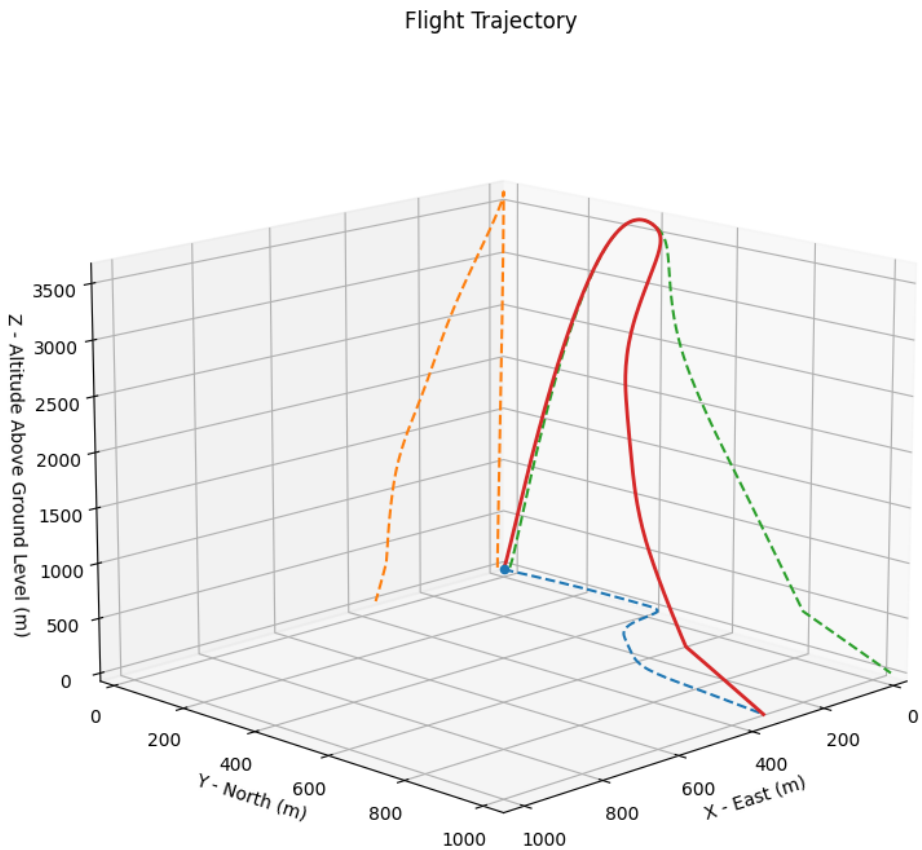

Figure 38: Flight Profile Graph

Appendix B
PROJECT TEST REPORTS APPENDIX

A. Table 18. Recovery System Testing

Test Criteria	Pass/Fail	Note
DAQ	Pass	Team was able to log the data successfully from the chamber pressure tests performed on one of our testing SRAD altimeter
Telemetry	Fail	Team faced some difficulties and noise in receiving data in the terrain plain due to uneven surfaces, trees and bushes. Along with that we didn't have the desired RF module due to unavailability of them.
Black powder ejection	Pass	BP ejection tests were successfully conducted by the team, however while performing the test we encountered some failures due to leaking caused by some ambiguity of the manufacturing of the composite and bulkhead which was later solved by the team.
Drogue chute deployment	Pass	After the BP ejection team carried out the test to check if the drudge parachute was lured out of the upper airframe. Team is currently relying on the ground test and haven't performed the drop test but as nomex blanket will be used to protect the drudge chute from the BP charge inflation of the drudge is not concerned.
Main chute deployment	Pass	Following the drogue, the main chute is deployed using the parallel tender-descender line cutter assembly. For testing, this team performed ground recovery testing by providing sufficient height on one end to hang the recovery system, allowing our shock cord to open freely and ejecting the drogue chute and hanging the nose-cone to pull the main chute out of the main bag as the TD lights up.

B. SRAD Propulsion System Testing

THIS PAGE INTENTIONALLY LEFT BLANK

C. SRAD Pressure Vessel Testing

THIS PAGE INTENTIONALLY LEFT BLANK

D. SRAD GPS Testing

THIS PAGE INTENTIONALLY LEFT BLANK

E. Payload Recovery System Testing

THIS PAGE INTENTIONALLY LEFT BLANK

Appendix C
HAZARD ANALYSIS APPENDIX

#	Hazard	Cause(s)	Effect(s)	Probability of Occurrence (1-5) & Rationale	Personnel Severity (0-5) & Rationale	Equipment Severity (1-5) & Rationale	Personnel Risk Index (Probability * Severity)	Equipment Risk Index (Probability * Severity)	Acceptable?	Mitigation Plan	Personnel Severity (0-5) With Mitigation Plan	Equipment Severity (1-5) With Mitigation Plan
1	Solid motor ignites during transportation to the launch site	Igniter is left in the motor during transport, and igniter comes into contact with a battery; fire in the car	Motor emits hot exhaust gases and flame; risk of burning equipment and people	2 The solid motor must come into direct contact with an active ignition source in order for this event to occur. Which is unlikely in this case as the motor will be kept under sufficient protection shielding it from external ignition sources.	4 Severe burns due to exhaust gases likely; exhaust gases will expand to area around motor, so large hazard area	4 Motor exhaust gases can burn, melt, or otherwise thermally damage nearby equipment in the pickup truck bed or trailer bed	8	8	Acceptable upon completion of quality assurance review	Motor used for the rocket will be bought on-site at the launch, rather than transported by STES team members, which removes this failure mode from the team's operations. In addition, the ignitor will not be introduced inside the motor until the rocket is installed properly on the launch rod thereby mitigating any chance of accidental ignition.	0	1
2	Solid motor ignites during assembly of the rocket	Ignition sources (ex. ignitiers, batteries, flammable chemicals, lighters, live wires) present near the rocket assembly table come into contact with the motor's fuel grain	Hot, high-pressure exhaust gases from motor can damage equipment and hurt team members; if motor is loaded into rocket's motor mount, the rocket could shoot forward at high velocity and injure people downrange	2 The solid motor must come into direct contact with an active ignition source in order for this event to occur. Which is unlikely in this case as the motor will be kept under sufficient protection shielding it from external ignition sources.	5 Exhaust gas will severely injure any team members assembling the rocket; people downrange of the rocket will be severely injured if the rocket impacts them	5 The gas and flame emitted from motor could burn and deform other necessary rocket components	10	10	Acceptable upon completion of quality assurance review	All possible ignition sources will be removed from the table where the rocket is assembled; integrating the motor with the rocket's motor mount is on of the the last steps in the assembly procedure; igniter won't be inserted into the motor until the rocket is mounted on the launch rail	1	1
3	Solid motor fuel grains ignites during assembly of motor	Ignition sources (ex. ignitiers, batteries, flammable chemicals, lighters, live wires) present near the rocket assembly table come into contact with the motor's fuel grain	Hot, high-pressure exhaust gases from motor can damage equipment and hurt team members.	3 The solid motor must come into direct contact with an active ignition source in order for this event to occur. This is more likely in this case as the motor will not be shielded from any external ignition sources until it is installed properly in the rocket.	4 Exhaust gas will severely injure any team members assembling the motor	5 Motor will be unusable if the fuel grain is ignited and spent before the flight	12	15	Undesirable: Written and reviewed decision required to proceed	All possible ignition sources will be removed from the table where the motor is being assembled. In addition, the grain will be stored inside cardboard containers and away from any sources of heat to make sure that the internal temperature of the grain remain optimal and it doesn't catch fire.	1	1
4	Solid motor fuel grain damaged, cracked or crushed during assembly of motor	Heavy equipment or tools are dropped on the motor fuel grains while the motor is being assembled; motor fuel grains are dropped from a large height; motor fuel grains are damaged while being inserted into motor	Fuel grains can no longer be used in the motor; possibility of propellant fragments or powder being ejected from the motor to the assembly area, which poses a fire hazard	2 Nature of motor assembly demands direct handling of fuel grains. Therefore if carefully not handled, then the hazard could occur resulting in catastrophic failure. However, it is less likely to occur if members are trained in handling the motor and its grains properly.	3 Fragments of solid propellant are a fire risk to the team members if not immediately located and cleaned up	5 Motor will be unusable if the fuel grain is damaged	6	10	Acceptable upon completion of quality assurance review	Motor will be assembled on a table clear of any heavy objects that can damage the fuel grains; STES members will assemble the motor carefully to so the grains aren't dropped or otherwise impacted with a large force	1	1
5	Black powder ignites during transportation to launch site	Ignition sources (ex. igniters, batteries, flammable chemicals, lighters, live wires) are stored with the black powder during transportation and ignite	Black powder capsules explodes; can injure team members nearby or damage equipment being transported near the black powder container	1 Under existing safety regulations, ignition sources are never stored with the black powder during transportation. Hence, this event is less likely to occur.	4 Exploding black powder capsules will injure any team members if transported near people.	3 Black powder will be wasted before the launch; exploding black powder capsules could damage nearby equipment due to concussive force of the explosion	4	3	Acceptable without review	Black powder charges in the rocket itself won't be loaded with black powder until the final assembly; black powder is transported to the launch site in small, separate, sealed capsules to minimize the chance and magnitude of an accidental explosion; these capsules will be attached to the site of a vented container so an accidental explosion can be safely controlled	1	1

#	Hazard	Cause(s)	Effect(s)	Probability of Occurrence (1-5) & Rationale	Personnel Severity (0-5) & Rationale	Equipment Severity (1-5) & Rationale	Personnel Risk Index (Probability * Severity)	Equipment Risk Index (Probability * Severity)	Acceptable?	Mitigation Plan	Personnel Severity (0-5) With Mitigation Plan	Equipment Severity (1-5) With Mitigation Plan
				1	4	4						
6	Altimeters trigger ignition of the black powder charges during assembly of the rocket	Altimeters are prematurely attached to the wire leads of the black powder charges; altimeters are turned on and a sudden pressure decrease or an altimeter malfunction causes the ignition signal to be sent pre-flight	Black powder capsules explodes; force and hot gases from explosion will injure team members assembling the rocket; explosion could launch a segment of the airframe or a coupler away from the rocket at high speed injuring anyone downrange	Pre-launch procedures dictate that the rocket's avionics systems won't be turned on until the rocket is mounted on the launch rail reducing the probability likelihood of this event occuring.	Exploding recovery charges will eject hot gas, airframe segments and coupler at high speeds will injure any team members in the way.	Recovery system charges will have to be replaced; possible damage to parachutes, shock cords, avionics bay and payload.	4	4	Acceptable without review	All avionics switches will be turned off until the rocket is mounted on the launch pad to stop any false ignition signals due to electronics malfunctions. In addition, wire leads leading to the black powder charge will not be connected to any electronics systems thereby mitigating any chance of accidental ignition.	1	1
				2	5	4						
7	Black powder used for recovery system charges ignites while being loaded into the charge capsules on the rocket	Ignition sources (ex. igniters, batteries, flammable chemicals, lighters, live wires) are stored black powder charges during rocket assembly	Black powder ignites fuel grains, resulting in the rocket firing prematurely which could cause damage to the members and other equipment	Assembly procedures require that all ignition sources are removed from the assembly area when the black powder is poured into the charge capsules thereby reducing the probability of occurence.	Black powder container will be in the hands of any team members while loading so accidental ignition will cause severe bums or tissue damage to fingers and hands.	Black powder explosion will release hot gas that could damage the airframe, parachutes, shock cords, avionics bay or payload of the rocket	10	8	Acceptable upon completion of quality assurance review	Loading black powder into the recovery system's capsules will be the last step of the assembly procedure; black powder will be loaded on a table clear of any possible ignition sources by a trained STES member	2	1
				2	3	5						
8	Rocket airframe crushed by other equipment during transportation to launch site	Equipment not secured properly within rocket or truck bed, rough terrain during transportation	Unable to use airframe, resulting in inability to participate in competition	Rocket airframe will be secured in-place inside the transportation vehicle and will be packed away from any heavy equipment that could damage it to reduce any accidental damage.	Crushed or cracked carbon fiber composite tubes will expose raw carbon fiber and release microfibers into the air, which can irritate skin and respiratory passage without proper protective equipment	Rocket airframe would be unusable and the rocket could not be launched at the competition	6	10	Acceptable upon completion of quality assurance review	The rocket airframe and all other fragile components will be stored with utmost security so as to ensure that no accidental damage happens to any such parts. Preferably, all such parts will be transported seperately in a different vehicle with trained members for avoiding any kind of mishap	0	2
				2	0	4						
9	Forgetting necessary equipment	Lack of preparation	Unable to participate in competition	Equipment checklists will be prepared pre-departure to verify that all parts and equipments are accounted for to reduce the probability of such an event occuring.	Lack of equipments does not pose a direct hazard to the health and safety of any team members	Missing equipment will render the rocket unusable unless replacement tools or components can be found	0	8	Acceptable upon completion of quality assurance review	An extremely detailed SOP with the list of materials will be followed. It will be checked at least two times i.e. before and after every loading/unloading. This will also ensure that any missing parts or equipment is taken into account so the required actions can be carried out as soon as possible.	0	1
				1	0	5						
10	Equipment falls out of vehicle while under way to launch site	Equipment not properly secured to truck bed	Unable to participate in competition	Equipment will be restrained with ratchet straps or placed in secured container, so these security measures will have to fail for anything to fall out	Equipment falling out of the vehicle does not pose a direct hazard to the health and safety of any team members.	Any equipment that falls out of the vehicle will likely be damaged beyond repair and could damage other vehicles on the road	0	5	Acceptable without review	Any and all equipments stored will be strapped firmly to the transportation vehicle and checked for any loose ends by "tugging". Any and all loose ends will be secured before transportation as well as a trained team member will be in close contact with the equipment ensuring no failures during transportation occurs.	0	1
				1	1	5						

#	Hazard	Cause(s)	Effect(s)	Probability of Occurrence (1-5) & Rationale	Personnel Severity (0-5) & Rationale	Equipment Severity (1-5) & Rationale	Personnel Risk Index (Probability * Severity)	Equipment Risk Index (Probability * Severity)	Acceptable?	Mitigation Plan	Personnel Severity (0-5) With Mitigation Plan	Equipment Severity (1-5) With Mitigation Plan
11	Theft of equipment	Equipment not properly secured and locked in truck bed and rocket trunk	Unable to participate in competition due to lack of necessary equipment	Equipment and the vehicle will be secured against theft; vehicles will only stop at predetermined safe rest locations	Equipment theft does not pose a direct hazard to the health and safety of any team members.	Necessary equipment will be missing, which will prevent participation in the competition unless it is replaced	1	5	Acceptable without review	All of the equipment whether expensive or cheap will be stored securely under trunks with locks on them which will be known only to the team members. All team members will be advised to put away any used or unused equipment safely in the storage devices. And finally, the containers will be covered and kept an eye on constantly to make sure no theft or any such unfortunate events occur.	1	3
				5	4	1						
12	Dehydration while team searches for rocket after launch or while assembling the rocket	Not bringing sufficient quantity of water, extended exposure to extreme heat	Discomfort of team members	Extreme desert temperatures mean dehydration is likely, though sun safety measures and adequate hydration will act as safeguards (see Mitigation plan)	Dehydration can cause long-term health problems for any team members if it left untreated and prevent them from participating in the competition	Dehydration does not pose a direct hazard to any equipment however, the team members efficiency maybe reduced and misuse of equipment can occur.	20	3	Unacceptable: Needs to be mitigated compulsorily	Team members will bring hats, sunglasses and sunscreen. They will also assemble two pop-up canopies at the launch site to provide shade and bring two 10-gallon coolers filled with bottled water to ensure hydration	2	1
				5	5	1						
13	Heat stroke while team searches for rocket after launch	Not bringing sufficient quantity of water, extended exposure to extreme heat	Possible illness or death of team members	Extreme desert temperatures make heat stroke likely, though less likely than dehydration; sun safety measures and adequate hydration will act as safeguards (see Mitigation plan)	Heat stroke severely injure any team members if left untreated, and will prevent them from participating in the competition	Heat strokes do not pose a direct hazard to any equipment however, the team members efficiency maybe reduced and misuse of equipment can occur.	25	2	Unacceptable: Needs to be mitigated compulsorily	Team members will bring hats, sunglasses and sunscreen. They will also assemble two pop-up canopies at the launch site to provide shade and bring two 10-gallon coolers filled with bottled water to ensure hydration	3	1

HAZARD INDEXING MATRIX	
	PROBABILITY OF OCCURENCE

#	Hazard	Cause(s)	Effect(s)	Probability of Occurrence (1-5) & Rationale	Personnel Severity (0-5) & Rationale	Equipment Severity (1-5) & Rationale	Personnel Risk Index (Probability * Severity)	Equipment Risk Index (Probability * Severity)	Acceptable?	Mitigation Plan	Personnel Severity (0-5) With Mitigation Plan	Equipment Severity (1-5) With Mitigation Plan
				1	2	3	4	5				
			1	1	2	3	4	5				
			2	2	4	6	8	10				
			3	3	6	9	12	15				
			4	4	8	12	16	20				
		SEVERITY	5	5	10	15	20	25				

KEY:	
19-25	Unacceptable: Needs to be mitigated compulsorily
14-18	Undesirable: Written and reviewed decision required to proceed
6-13	Acceptable upon completion of quality assurance review
1-5	Acceptable without review

Appendix D
RISK ASSESSMENT APPENDIX

ID	Phase	Risk	Causes	Probability	Consequences	Severity	Mitigation
1	Pre Competition	Failure to complete tasks due to time conflicts with other tasks relating to university & works etc.	Lack of communication between team-leads and between general members and team leads. The task might also be too ambitions	4	5	20	Communicate with everyone and take in consideration the available time of each member of the team; clearly split the tasks and assign the hard deadlines; constantly verify that the task is being performed; try to find additional skillful people to help if needed; asses the difficulty of the task and consider spending time on finding an easier solution.
2	Pre Competition	Mistakes on subsystem level due to miscommunication	Inadequate leadership of the team-leader. Sub-team members are either divided by a geographical or language barrier.	4	4	16	During the weekly lead-meetings discuss and verify the work on subsystems; have one responsible person for each issue. Peer review as much as possible. Insure that most of the team members speak english and are located on the university grounds most of the week.
3	Assembling	Loose wires prevent smooth assembly	Many wires have to be connected internally and space is limited	4	4	16	Wires can get tangled with other parts -> proper assembly checklist needed; make additional incisions for easier removal and wiring; inspect wiring upon every usage, and before storing. Taylor design to avoid such problems. Use good quality connectors.
4	Pre Competition	Team split between tasks	Team members ambition to achieve the perfect rocket.	3	4	12	Prioritize the tasks; assign the team members to focus completely on the highest priority ones; terminate infeasible objective; discuss compromised objectives at team meetings.
5	Pre Competition	Mistakes at interface due to miscommunication	Inadequate leadership of the system engineering team.	3	4	12	Interface are under the responsibility of a single members of the system engineering team. Critical interfaces are discussed weekly with the team leaders.
6	Global	Team conflicts due to the organisation decisions	Chain of command not well established. Decisions were taken without considering all stakeholders. Lack of good leadership.	4	3	12	Clear structure; identify and communicate the priority tasks clearly; Tasks that concern competition rocket receive the highest priority; the team's primary focus is to make a successful rocket for the competition
7	Pre Competition	Lack of money to complete the objectives	Too little effort put into publicizing the project or too little interest on the industry's side in our activities	2	5	10	Concentrate more efforts in sponsoring and PR by establishing a strong sponsoring team with reliable members. Profit from EVE's help in this domain.
8	Pre Competition	Person injuries during fabrication, launch, testing	Lack of adequate procedures and non-compliance with local legislations or safety regulations.	2	5	10	Ensure compliance with safety regulations, keeping safe distance, having checklist to prevent improper handling.
9	Pre Competition	Unexpected environmental conditions affect simulation results	Wind, temperature or atmospheric pressure exceed the range of expected values in the simulations	3	3	9	Determine the apogee for large range of values; Experiment with different trim weights to compensate. Determine range of atmospheric values that insure apogee can be reached with adequate control.
10	Pre Competition	Exceeding the mass margin for the selected engine	Another engine has to be used than the one initially selected.	3	3	9	Weighing each component to precisely determine its mass; Take a system and subsystems level margins to account for uncertainty, Have a plan where a mass could be decreased if necessary
11	Launch	Instability due to asymmetric mass distribution	Inner systems were designed asymmetrically to accommodate heavy/bulky elements (eg. Batteries).	3	3	9	Design such that the weight distribution is as symmetrical as possible. Design an interchangeable fin system so the stability margin can be tailored late in the rocket construction. Check stability through simulation.
12	Pre Competition	People having unexpected projects	Personal lack of time or lack of interest.	2	4	8	Clearly identify reliable members based on their availabilities, demonstration of personal investment and initiative. Exclude unreliable people.
13	Pre Competition	Inadequate working force (in any SS)	Too little effort was invested into finding the adequate peoples. The objectives are too ambitious. Team member's experience is inadequate.	2	4	8	Clearly prioritize the tasks and make sure that mission critical ones have enough peoples working on them; Try to recruit additional working force for the remaining (second-order) tasks; identify the feasible objectives and terminate or relax them.
14	Pre Competition	Exceeding the budget contingencies taken on subsystem level	Unexpected system features in multiple systems were implemented after the budget were established. Some features were much more complex than	2	4	8	Designing the subsystems with allocated with allocated weight and power consumption in mind; Weighing nd verifying the weight for an many components as possible as well as maintaining rigorous budgets for mass, power and money.

ID	Phase	Risk	Causes	Probability	Consequences	Severity	Mitigation
15	Pre Competition	Minor damage on a test launch	Rocket behaves differently than expected (eg. Descent speed). Some functions didn't work properly (eg. Un-	4	2	8	Analyze and identify most probable things that can fail, plan the repairment accordingly. Fins and boattail are the most likely to fail, make them interchangeable.
16	Pre Competition	Stability: Bad CP from simulation	Error in rocket definition in commercial rocket simulation program (OR or RS).	1	5	5	Check by hand using Barrowman method.
17	Pre Competition	Stability: Bad CM from simulation	Error in rocket definition in commercial rocket simulation program (OR or RS) or because of incomplete CAD	1	5	5	If weight margins allow for it, plan locations for trim weights.

Operation Risks

ID	Phase	Risk	Causes	Probability	Consequences	Severity	Mitigation
1	Assembly	Not enough time	A part is broken shortly before the assembly period. Team members aren't coordinated. Stress induces errors.	4	5	20	Assembly checklists; assign duties for each for each team members to avoid confusion.
2	Recovery	Parachute entangles	The folding of the parachute wasn't done according to procedure. Shock cords and lines get tangles in the rocket.	4	5	20	Write standard folding procedure. Always have parachute folded by the same person. Put parachute in deployment bag.
3	Seperation	No separation	Cone is too tightly fitted to airframe. Ejection charge is not strong enough or pressure leaks through recovery bulkhead.	4	5	20	Several separation tests in different rocket positions, including shake test and test flight.
4	Seperation	No deployment of parachute	Parachute is struck in the rocket by protruding structural elements. It is tangled with it's own cord or other parts of the rocket.	4	5	20	Use an ejection ConOps which reduces the risk of entanglement to a minimum. Do ejection tests with payload.
5	Flight	Signal lost- Rocket untraceable	Rocket runs of power during flight, lands behind a terrain feature which obstructs the signal or crashes.	3	4	12	Design choice: use of redundant signals (900 MHz and 433 MHz), Also secondary system (Beacons). Implement easy integration of rocket attitude in simulator to predict landing location and have GPS data logging to have the latest registered position of the rocket.
6	Arming	Not enough battery power to launch after wait time on pad.	Weather is not optimal. Electrical issues with igniters. Another rocket has problems which delay the countdown.	2	5	10	Dedicate more mass budget to batteries in order to last for 3(+) hours. Implement standby or hibernation modes in sub-systems such that they drain less power before launch.

ID	Phase	Risk	Causes	Probability	Consequences	Severity	Mitigation
7	Flight	Unusable flight	The stability margin is smaller than expected. Elements detach in rocket (Bouncing).	2	4	8	Check CP/CM through different calculations + people
8	Recovery	Pre-deployment on the ground	Eyebolt and bulkhead damage. Damage to body tube.	2	4	8	Shunt charges until they're attached to recovery electronics. Do not move rocket with armed electronics.
9	Recovery	TD too tight to separate	Thermal Expansion, weather too warm	2	4	8	Have multiple redundancies for TD on site to mix and match different pins and bases.
10	Recovery	TD does not separate	Continuity issues, packed too tight to not allow air.	2	4	8	Use thinner gauge wires for connections to allow some air to go throught the base, Check for continuity when you insert the ingitors
11	Recovery	Ground test fails to eject recovery devices	Poor quality black powder, gases vent out from the holes too quickly, unburnt residue after test.	3	5	15	Ask local rocketeers/mentors/L3s to find you good quality black powder, pack the charges and ensure they don't dangle around the pouch, check for continuity before tests
12	Disassembly	Impossible due to jammed subsystems	Following a rocket crash, parts are deformed or temperature variations warp the parts such that they get stuck.	2	3	6	Bring adapted (incl destructive) tools for this case. Design such that assembly and disassembly are easy and not influenced by temperature variations.
13	Ground arrival	Damage on landing	Non nominal operation of parachute and recovery or underestimated parachute size.	3	2	6	Design choice of parachute size, also avoid to have fragile parts exposed.
14	Recovery	Main chute deploys at/near apogee	Shear pins, body tube or bulkhead failure. Chances of drifting more than expected.	3	2	6	Ensure integrity of parts and assembly before launch
15	Firing	Misfire	It happens....	3	1	3	Use two igniters from the beginning, (ask for) recycle.

Appendix E
ASSEMBLY, PREFLIGHT, LAUNCH, RECOVERY, AND OFF-NOMINAL CHECKLISTS APPENDIX

Assembly, Preflight, Launch, Recovery, And Off-Nominal Checklists Appendix

Title:	
Aim:	
Testing Team:	
Approved By:	
Location:	
Status:	!

Motor Assembly		
Step	**Action**	**Check**
1	Fill the liner with all the grains	
2	Grease the top and bottom grains	
3	Insert the liner into the case carefully	
4	Grease the oring for forward closure and insert it	
5	Grease the forward seal disk and add it to the top of the grain in the case	
6	Add the delay grain into the forward closure	
7	Insert the forward closure into the top of the case and tighten it firmly	
8	Apply grease to the oring for nozzle and insert it	
9	Insert the nozzle into the aft end of the case, ensure all orings get packed inside	
10	Tighten the aft closure and ensure all threads get engaged tightly	

Booster Section Assembly		
Step	**Action**	**Check**
1	Add the Coupler at the top of the booster tube, secure it using bolts.	
2	Inserts the centering ring inside the fuselage at given position and bolt it	
3	Inserts the thrust bulkhead at the top of the tube and bolt it.	
4	Add Aft bulkhead and mount aeropack retainer on it.	
5	Insert the casing gently and let it press fit through thrust bulkhead and screw the retainer cap	
6	Complete the fin assembly	
7	Add Boattail at the end of fuselage	
Upperairframe Section Assembly		
Step	**Action**	**Check**
1	Add the coupler at the bottom of the upperairframe and secure it using bolts.	
2	Ingress the payload with whole stack and retain it using centering rings.	
3	Insert the Avionics Stack at the desired location making sure it is properly aligned and secured	
4	Install recovery-coupling bulkhead at the top of the upper airframe	
Recovery Checklist		
Step	**Action**	**Check**
1	Use a multimeter to check continuity	
2	Prepare the recovery bulkhead, add eyebolts and terminal blocks to it.	
2	Prepare the ejection charge gloves, fill them with the required quantity of blackpoweder	
3	Add a small amount of butyl tape next to holes to give the bulkhead an airtight seal	
4	Fold the parachutes and put them in their deployment bags.	
5	Connect the parachutes with swivel links on one end and another end with quick links and TD.	
6	Install the parachute gently inside parachute bay	
7	Attached the recovery bulkhead to upperairframe using shear pins and complete the recovery assembly	
Nosecone Assembly Checklist		
Step	**Action**	**Check**
1	Add the nosetip and nosetip retainer	
2	Pass the M12 threaded rod throughout nosecone upto nosetip retainer	
3	Attached the M12 washer eyenut	
Rocket Assembly Checklist		

Step	Action	Check
1	Insert the recovery hardware and chutes inside the nosecone and close it up	
2	Connect 4 M4 Nylon bolts on nosecone sholder	
3	Connect the booster and upper airframe with the aluminium coupler	
On Pad Checklist		
Step	**Action**	**Check**
1	Creafully slide the rocket onto the launch rail	
2	Raise the rocket to the desired launch angle	
3	Arm the altimeters and GPS by turning ON the arming switch	
4	Arm payload with the wifi switch using any mobile device	
5	Clear the pad of all non-essential personnel	
6	Get permission from the range manager to install ignitors	
7	Strip the leads of the igniters and attach them to the launch control leads	
8	Leave launchpad and maintain a safe distance	
Rocket Recovery Checklist		
Step	**Action**	**Check**
1	Use data from featherweight GPS and RocketPy Dispersion analysis to find the rocket at the desert	
2	Click close up pictures of rocket at landing site	
3	Turn off all the electronics through their switches	
4	Cut all wires connected to pyrotechnic recovery devices	
5	Disconnect the parachutes and pack them up	
6	Have 3 people to pick the rocket up and head towards paddock for post flight analysis	
Post flight Checklist		
Step	**Action**	**Check**
1	Remove the motor from the aft section and verify if there's any unburnt fuel inside case	
2	Dispose any unused energetics safely	
3	Remove electronics from upper airframe and disconnect the batteries	
4	Send the altimeters to Operations to log flight data	
5	Inspect all components and have ample pictures	
Pad Abort Checklist		
Step	**Action**	**Check**

1	Confirm Launch abort	
2	Check launching system connection with the ignitor	
3	Disable current flow through the circut breaker	
4	Final status check	
5	Wait for green flag	
6	Begin personnel approach	
7	Remove the ignitor of the combustion chamber	
8	Turn off all recovery electronics	

Appendix F
ENGINEERING DRAWINGS APPENDIX

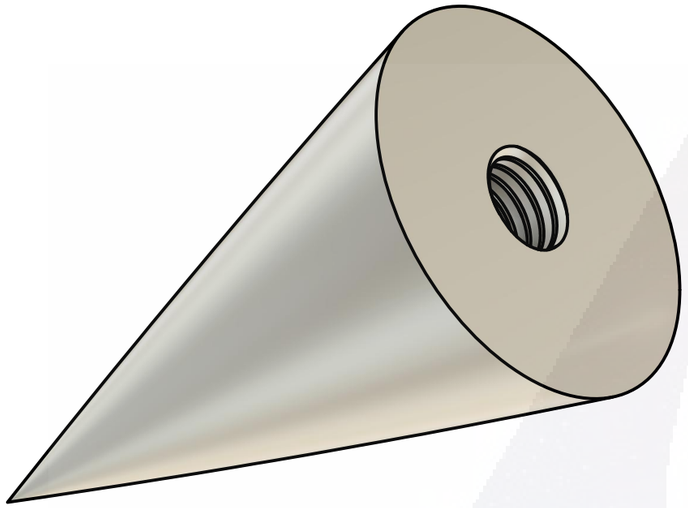

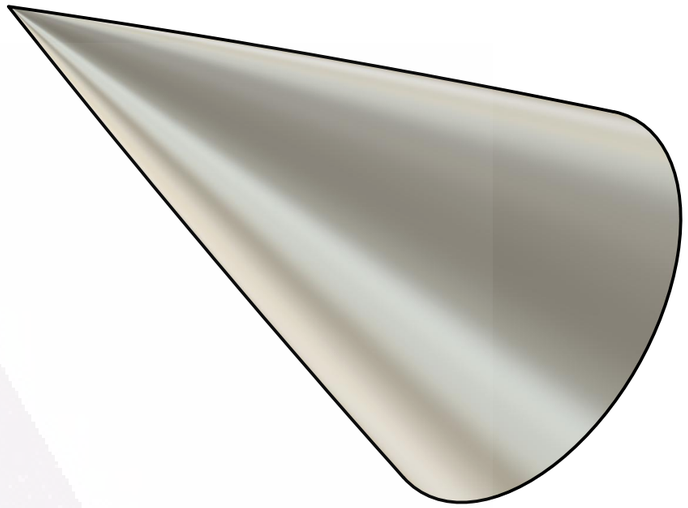

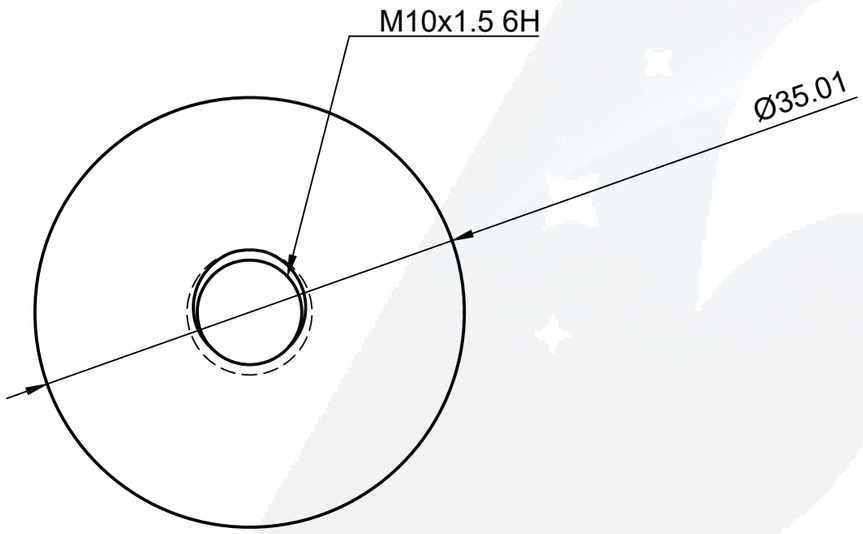

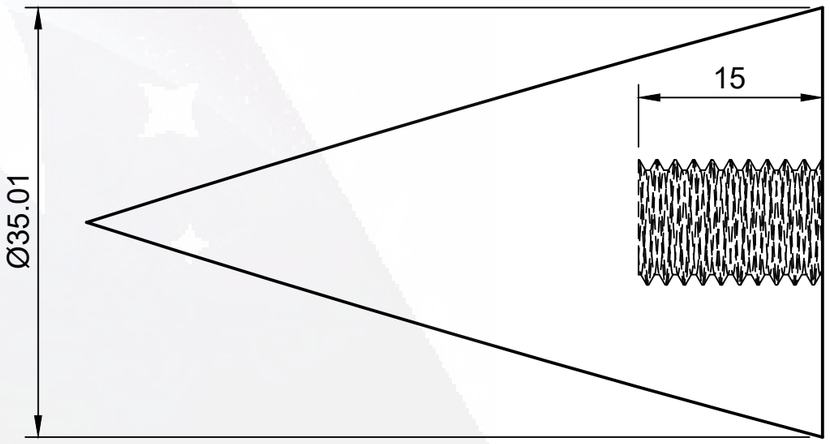

Department	Component	Material	Drawn By	Approved By
Aerostructure	NoseTip	Aluminum 6061	Tanmay Kanmahale	Aasit Vora

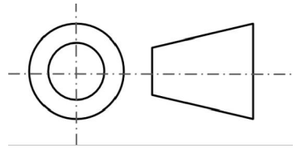

All Dimensions are in mm
Tolerances: ±0.02 mm

Drawing Scale
2:1

Sheet Size	A3	Team Logo	

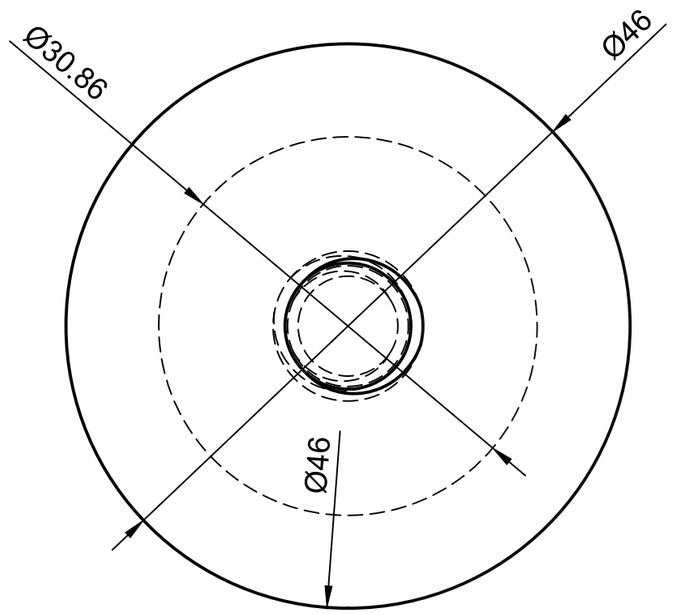

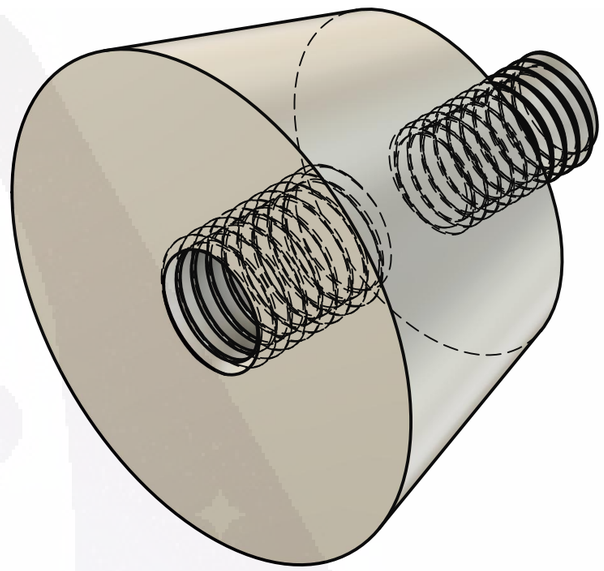

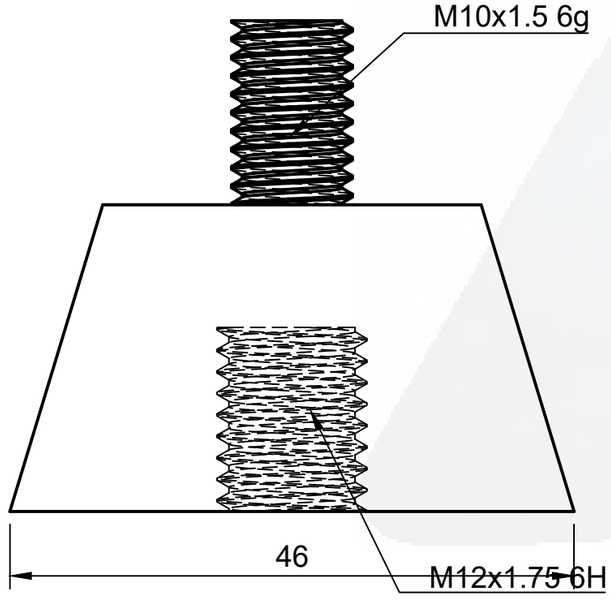

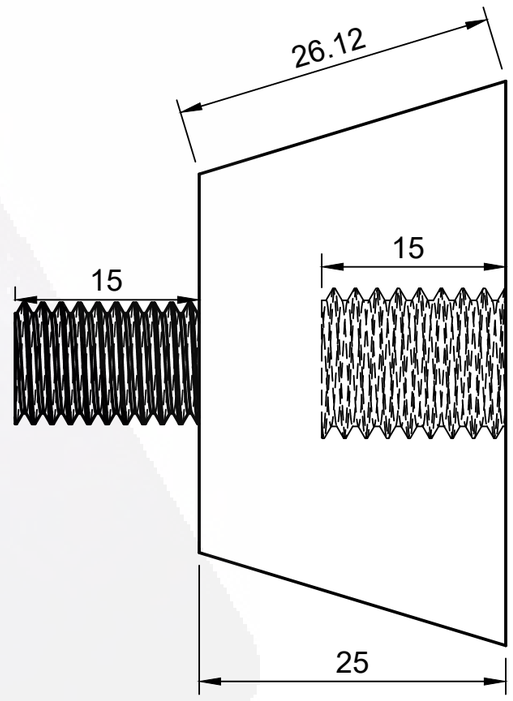

Department	Component	Material	Drawn By	Approved By
Aerostructures	Nose Tip Retainer	Aluminium	Aasit Vora	Aasit Vora

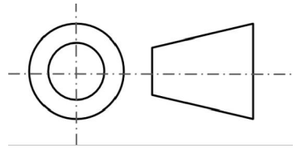

All Dimensions are in mm
Tolerances: ±0.02 mm

Drawing Scale

Sheet Size	A3	Team Logo	

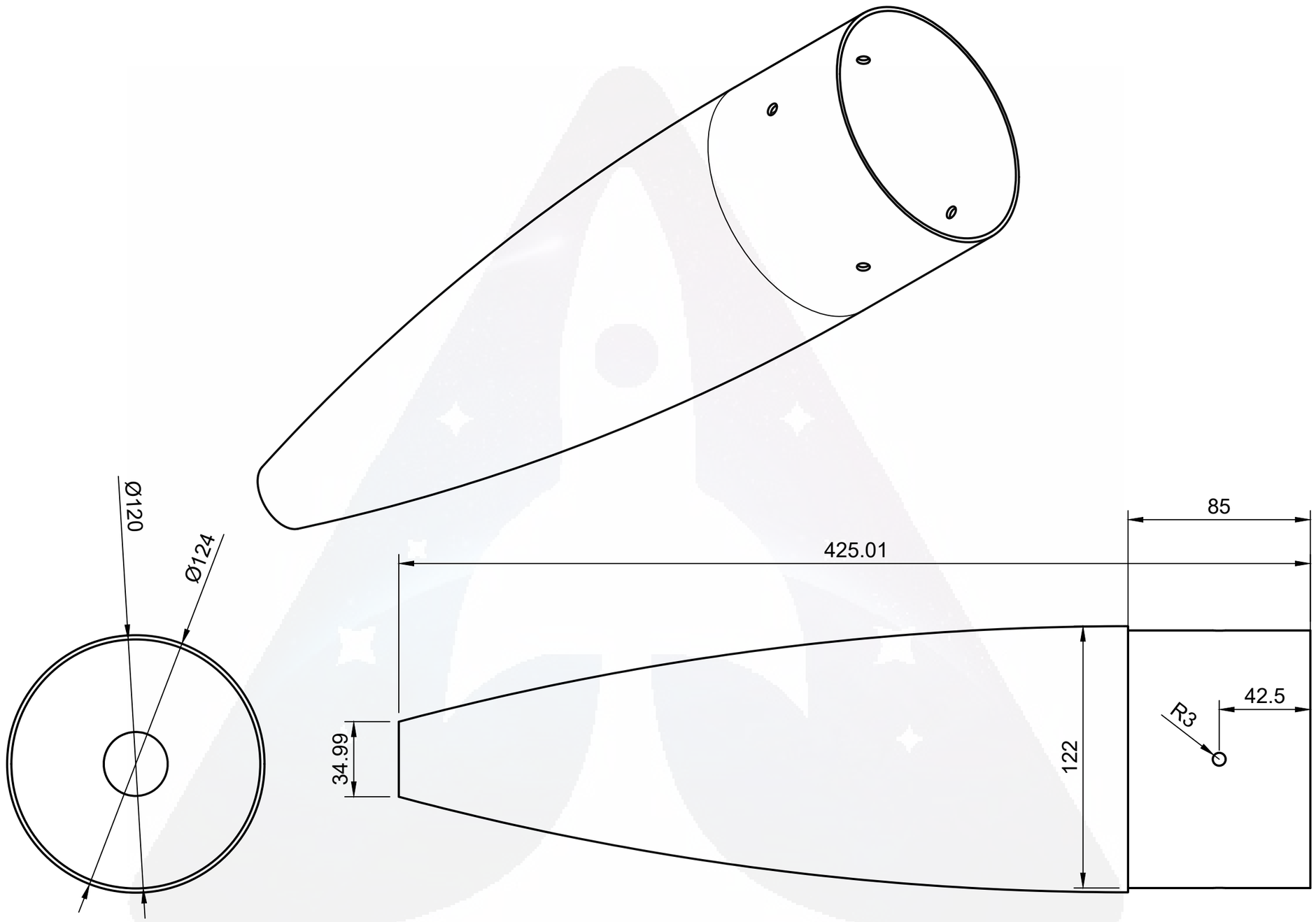

Department	Component	Material	Drawn By	Approved By
Aerostructure	Nosecone	Fiberglass	Tanmay Kanmahale	Aasit Vora

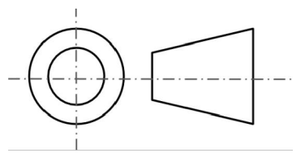

All Dimensions are in mm
Tolerances: ±0.02 mm

Drawing Scale: 1;2

Sheet Size: A3

Team Logo

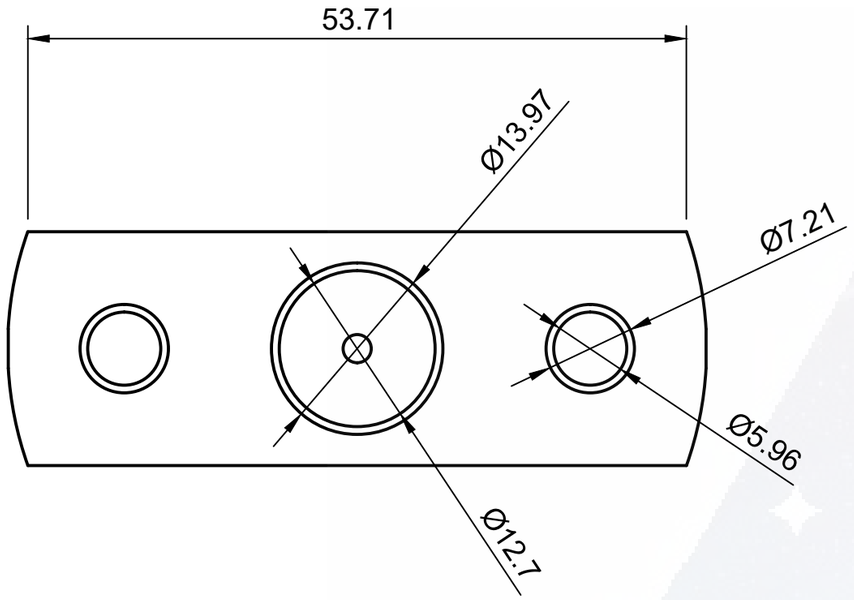

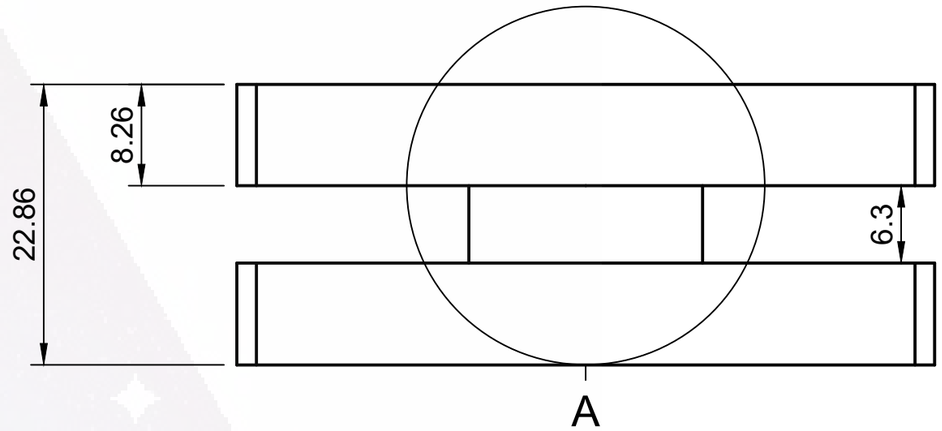

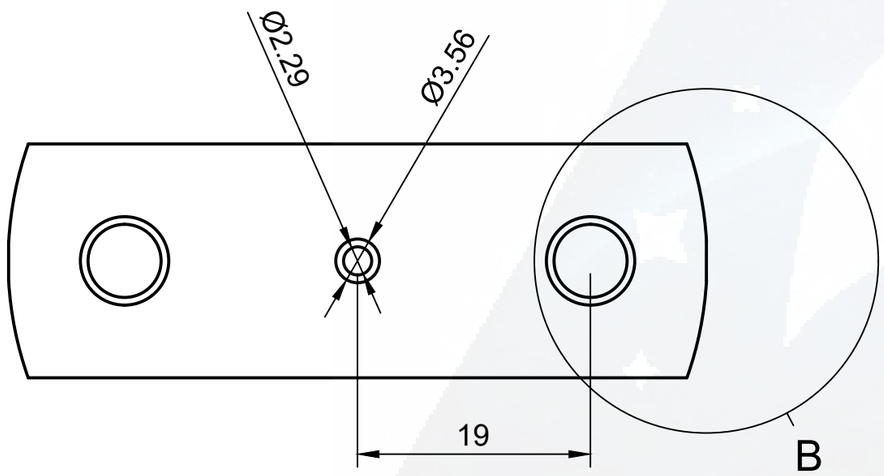

B (2)

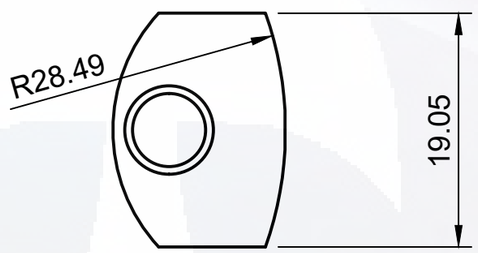

A (2)

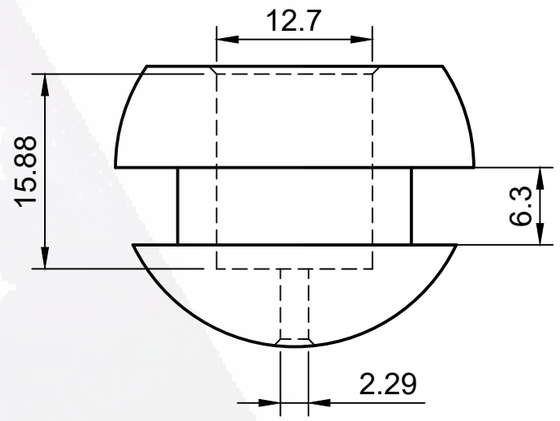

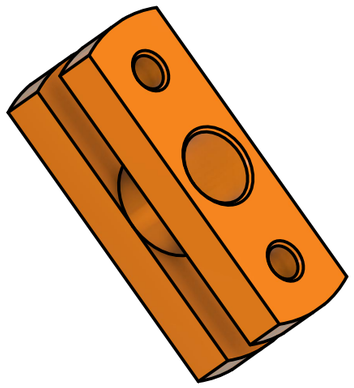

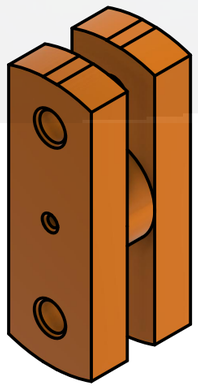

Department	Component	Material	Drawn By	Approved By
Recovery	Tender Descender Base	Aluminum 6061	Tanmay Kanmahale	Aasit Vora

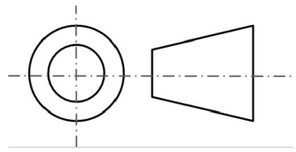

All Dimensions are in mm
Tolerances: ±0.02 mm

Drawing Scale
2:1

Sheet Size	A3	Team Logo	

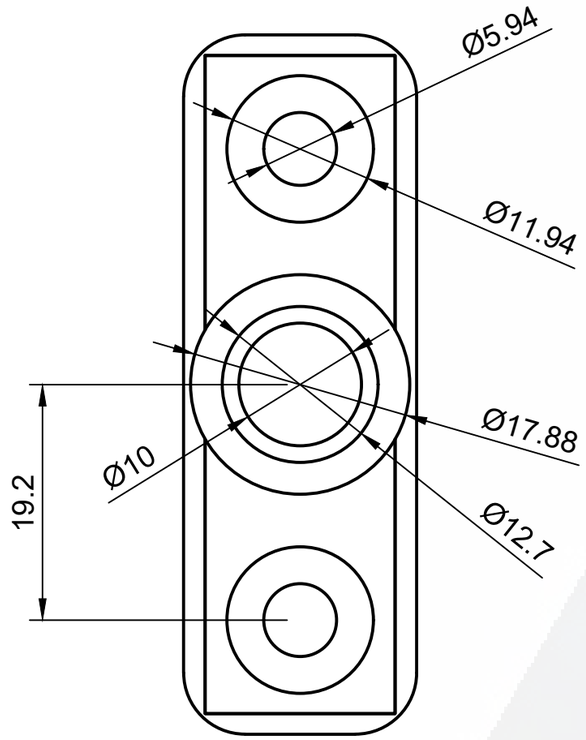

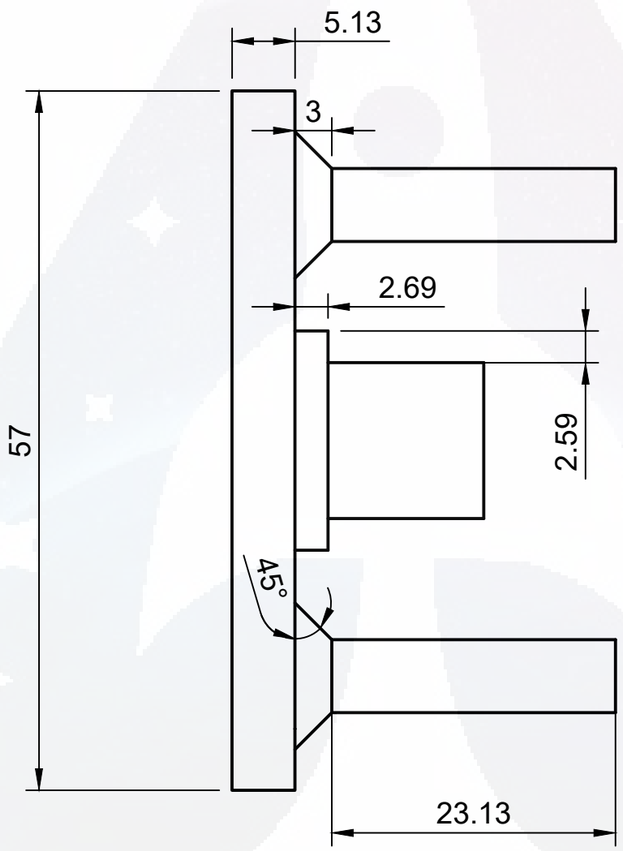

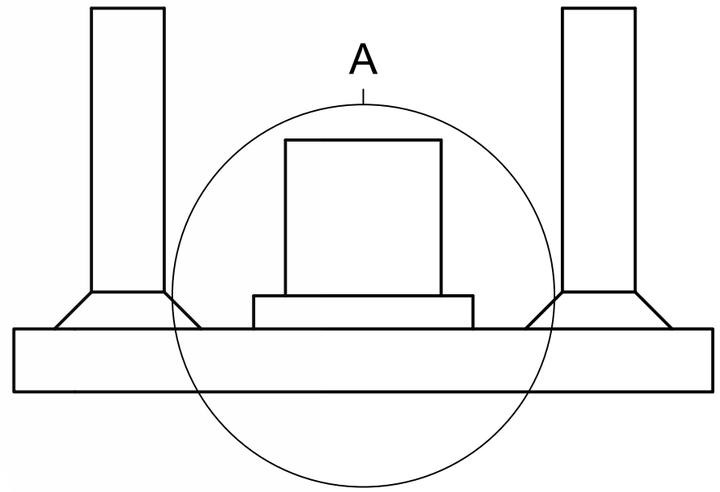

A (2)

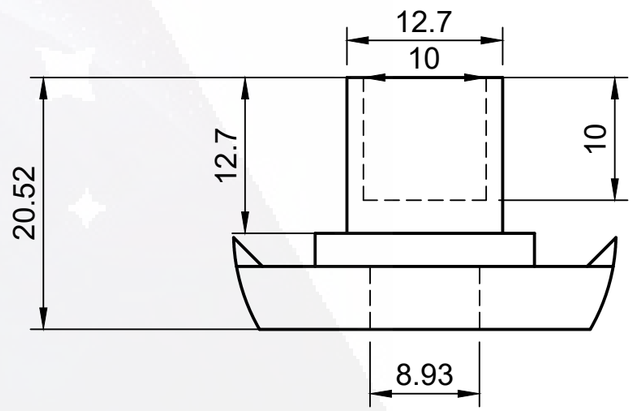

Department	Component	Material	Drawn By	Approved By
Recovery	Tender Descender Piston and Rod	Aluminum 6061	Prashant Patil	Aasit Vora

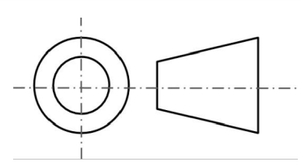

All Dimensions are in mm
Tolerances: ±0.02 mm

Drawing Scale
2:1

Sheet Size	A3	Team Logo	

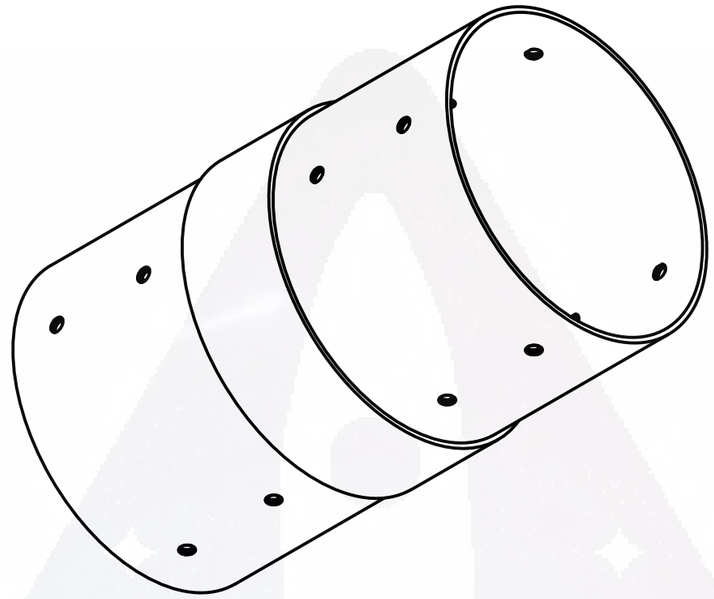

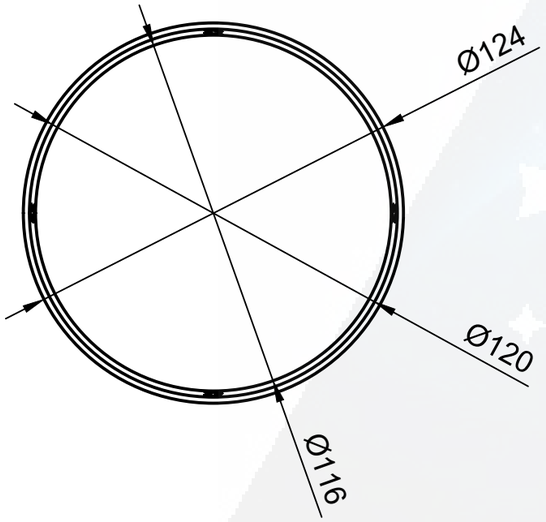

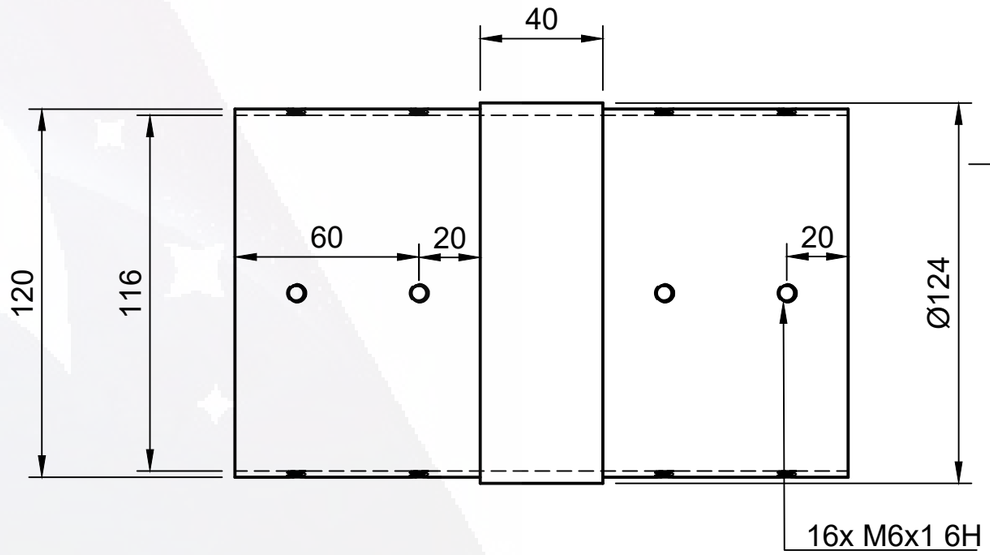

Department	Component	Material	Drawn By	Approved By
Aerostructure	Tube Coupler	Aluminum 6063	Tanmay Kanmahale	Aasit Vora

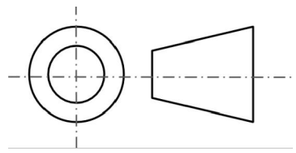

All Dimensions are in mm
Tolerances: ±0.02 mm

Drawing Scale
1:2

Sheet Size	A3	Team Logo	

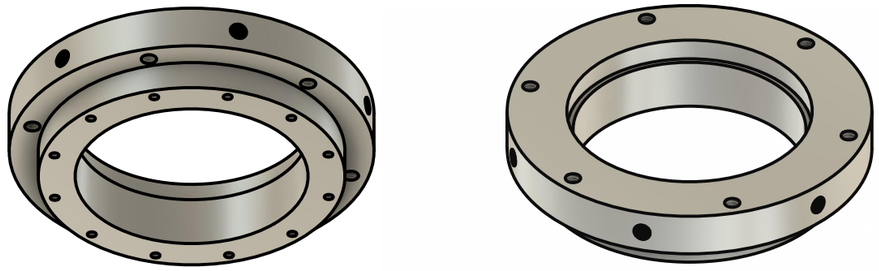

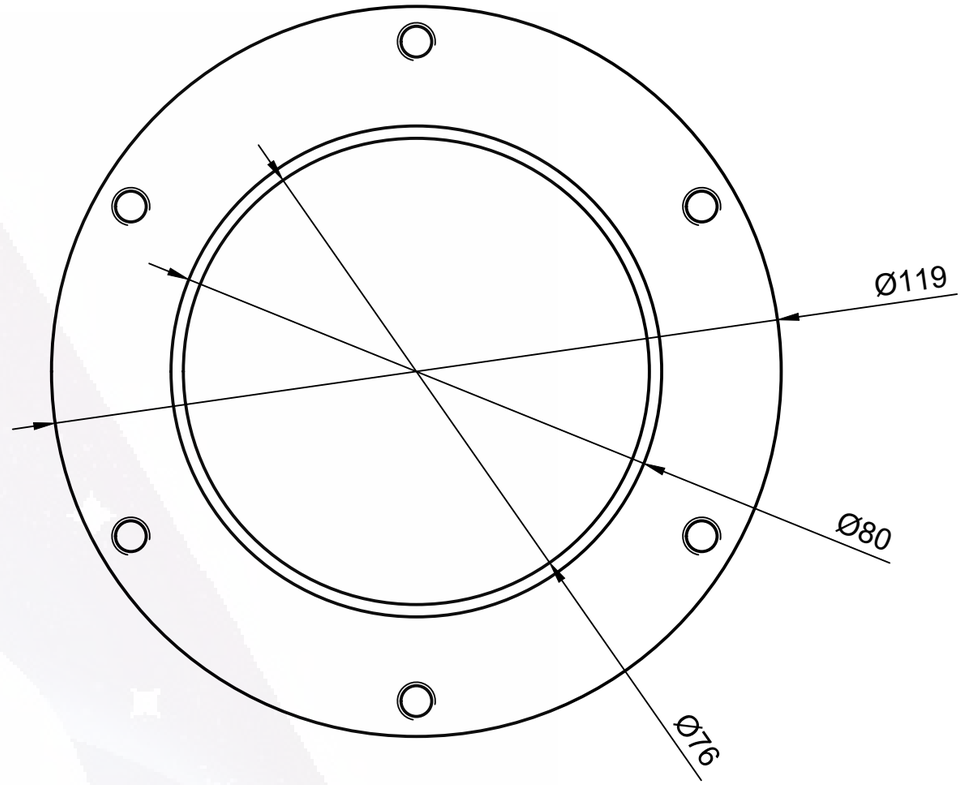

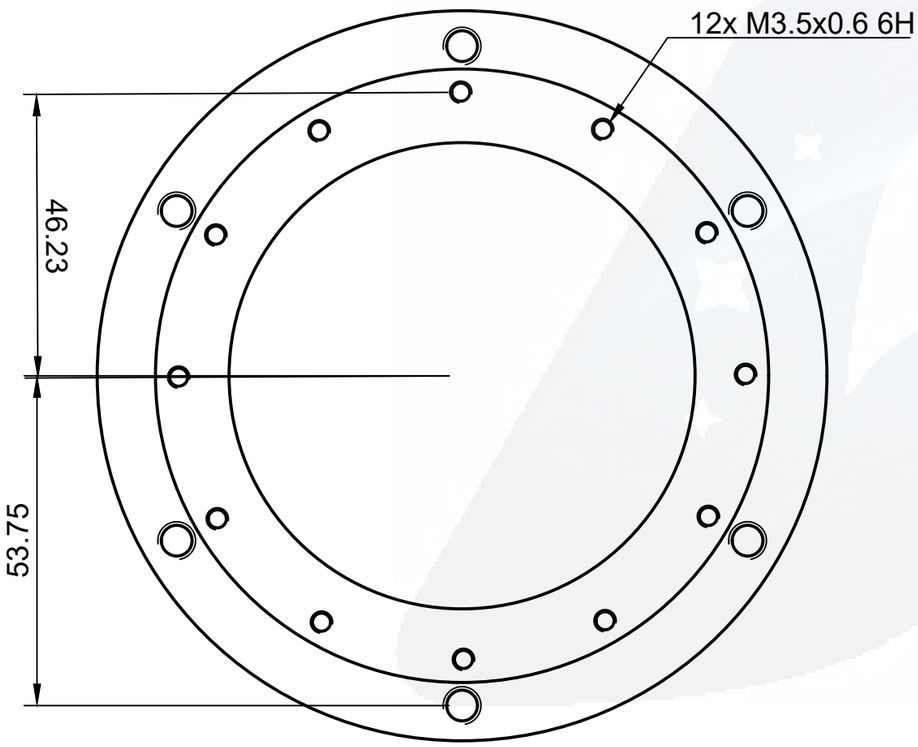

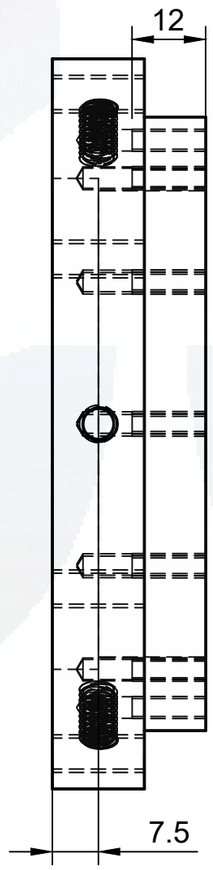

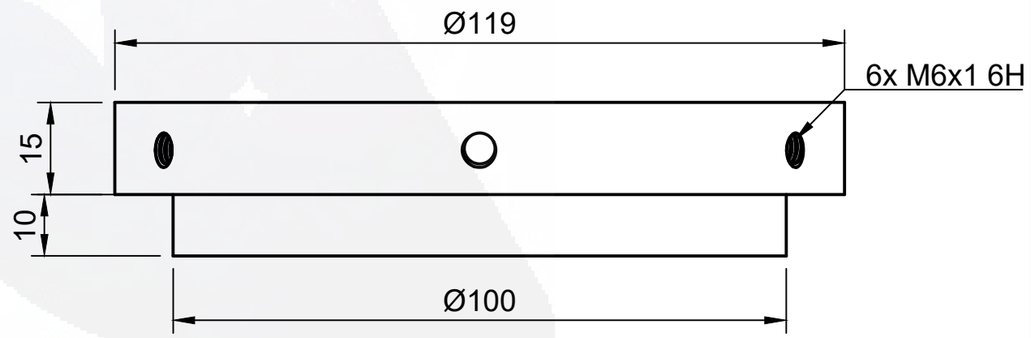

Department	Component	Material	Drawn By	Approved By
Aerostructure	Retainer Bulkhead	Aluminum blank	Tanmay Kanmahale	Aasit Vora

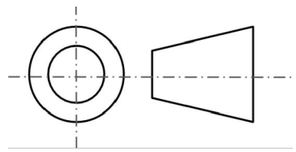

All Dimensions are in mm
Tolerances: ±0.02 mm

Drawing Scale
1:1

Sheet Size	A3	Team Logo	

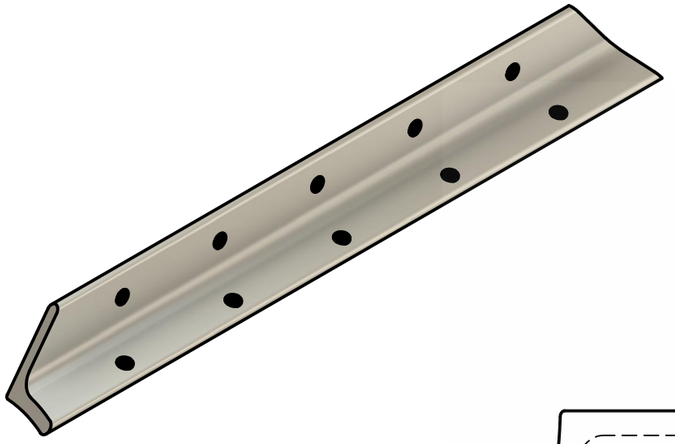

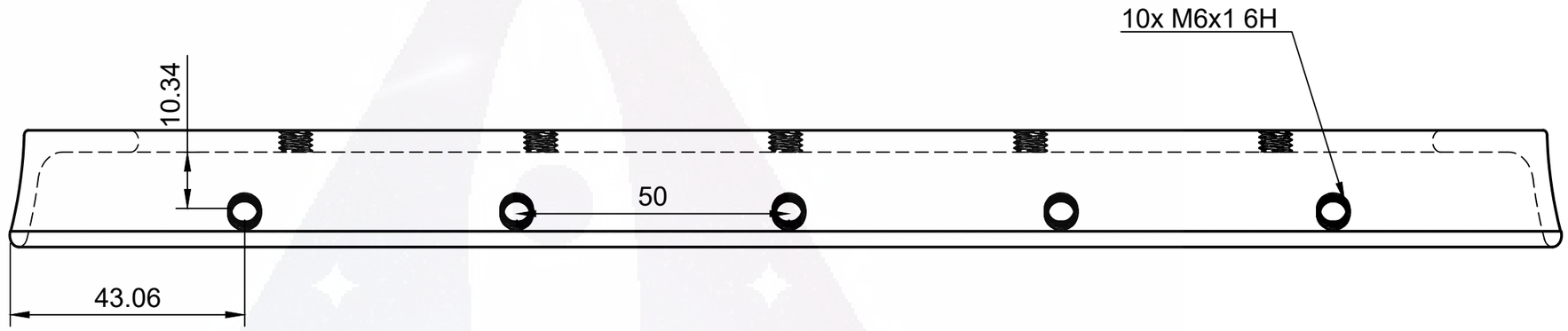

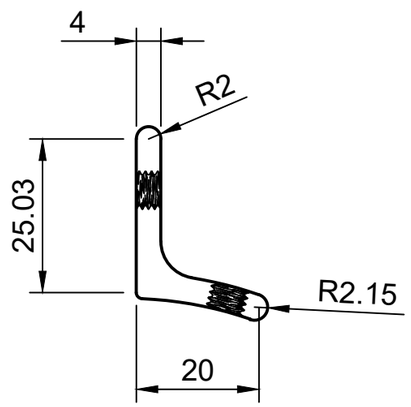

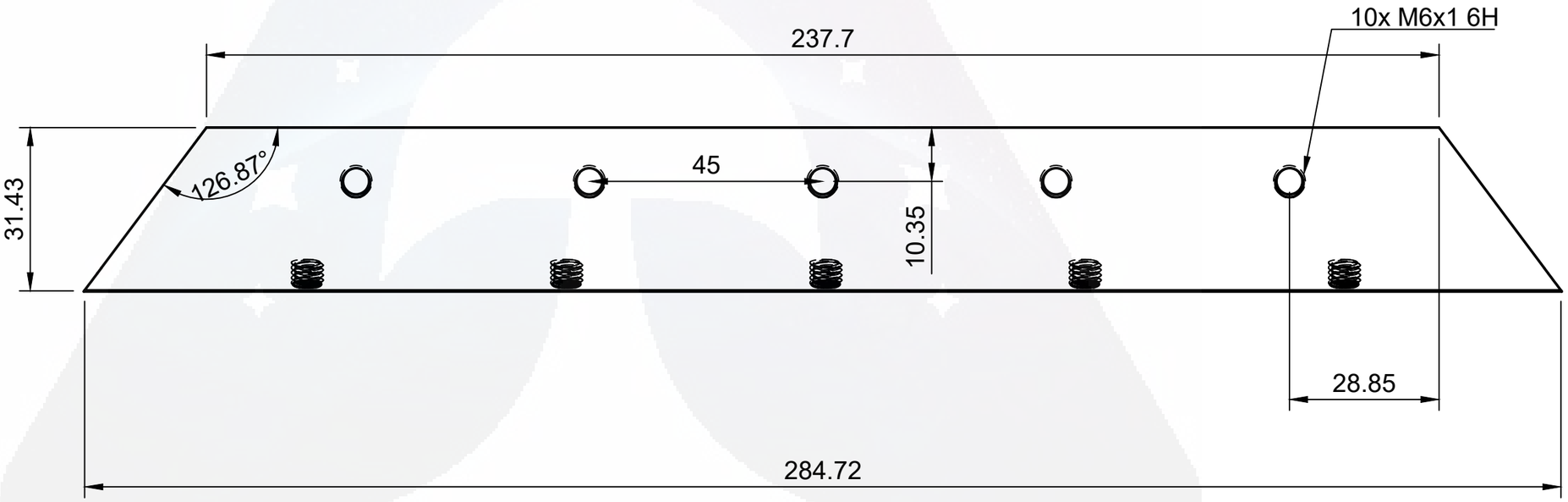

Department	Component	Material	Drawn By	Approved By
Aerostructure	Fin Brackets	Aluminum	Tanmay Kanmahale	Aasit Vora

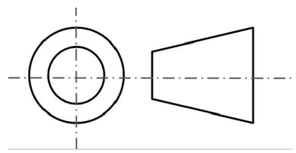

All Dimensions are in mm
Tolerances: ±0.02 mm

Drawing Scale: 1:1

Sheet Size: A3

Team Logo

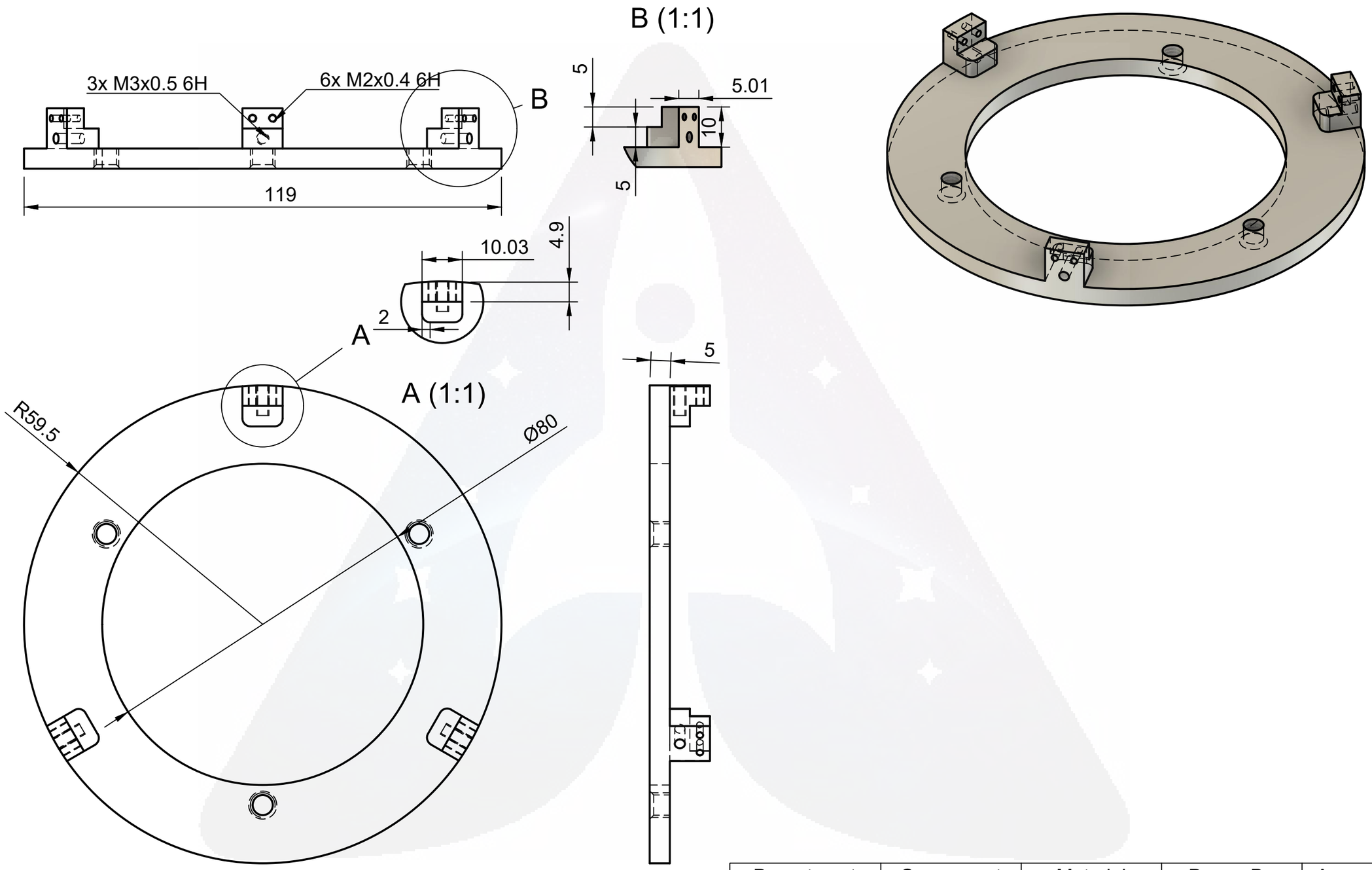

Department	Component	Material	Drawn By	Approved By
Aerostructures	Avionics Stack Ring	PLA +	Tanmay Kanmahale	Aasit Vora

All Dimensions are in mm
Tolerances: ±0.02 mm

Drawing Scale

Sheet Size: A3

Team Logo

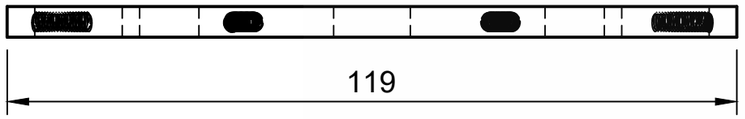

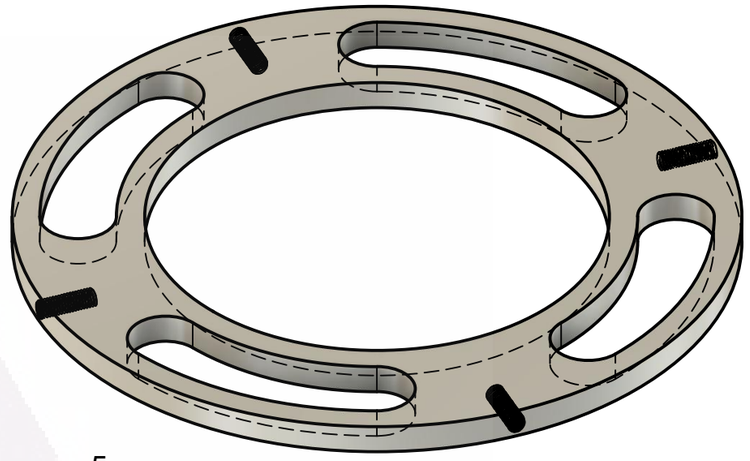

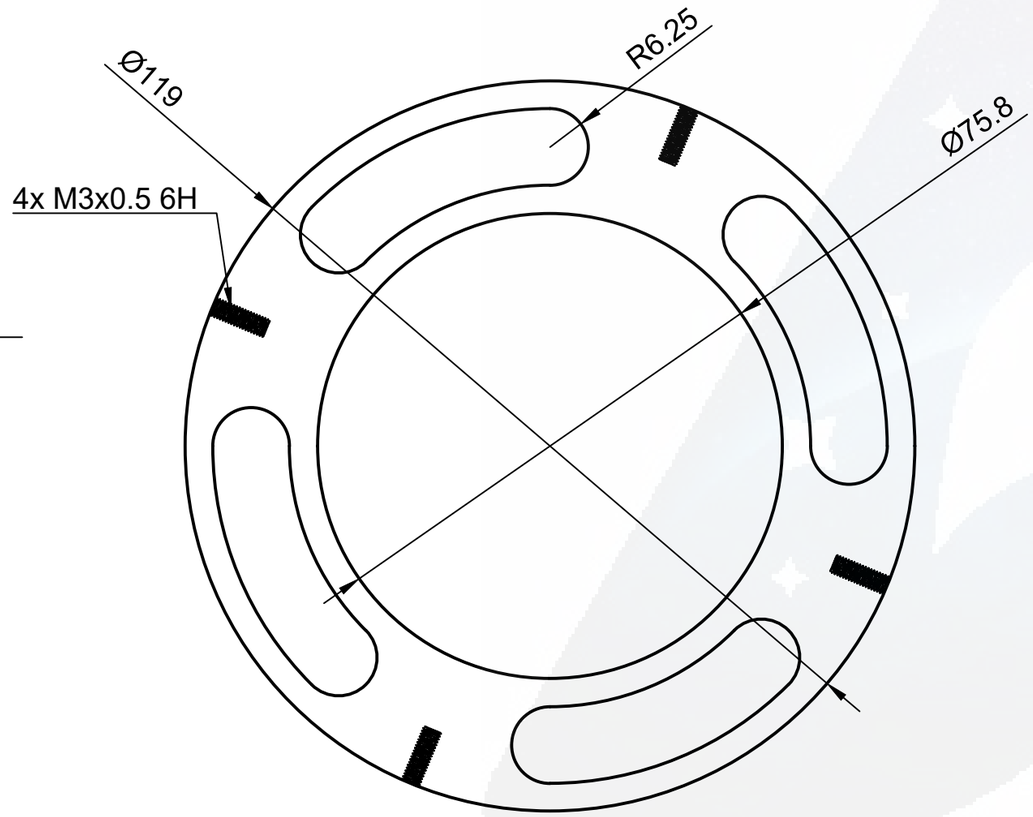

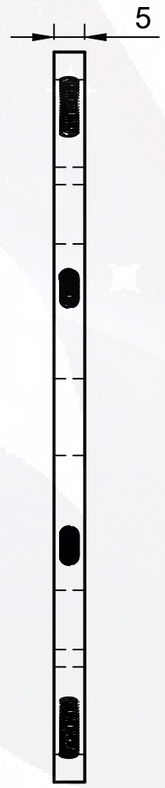

Department	Component	Material	Drawn By	Approved By
Aerostructures	Centering Rings	Aluminium	Atharva Pingale	Aasit Vora

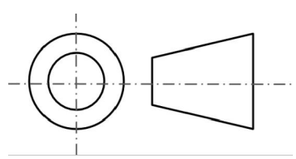

All Dimensions are in mm
Tolerances: ±0.02 mm

Drawing Scale

Sheet Size: A3

Team Logo

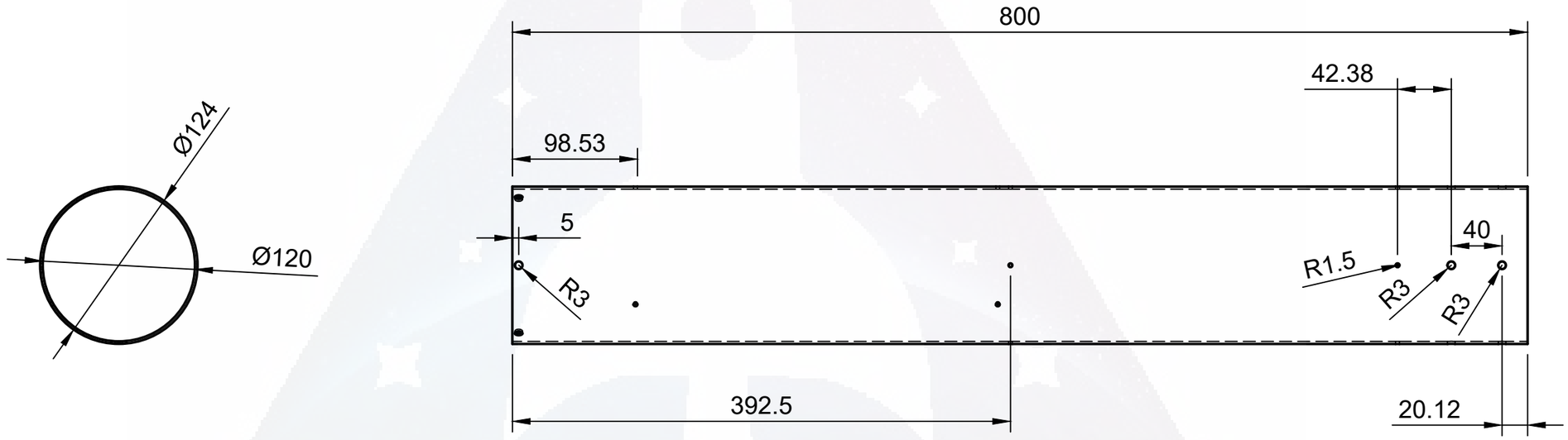

Department	Component	Material	Drawn By	Approved By
Aerostructure	Upper Airframe	Fiberglass	Tanmay Kanmahale	Aasit Vora

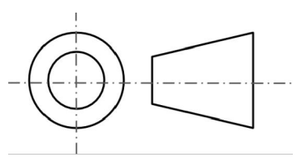

All Dimensions are in mm
Tolerances: ±0.02 mm

Drawing Scale: 1:4

Sheet Size: A3

Team Logo

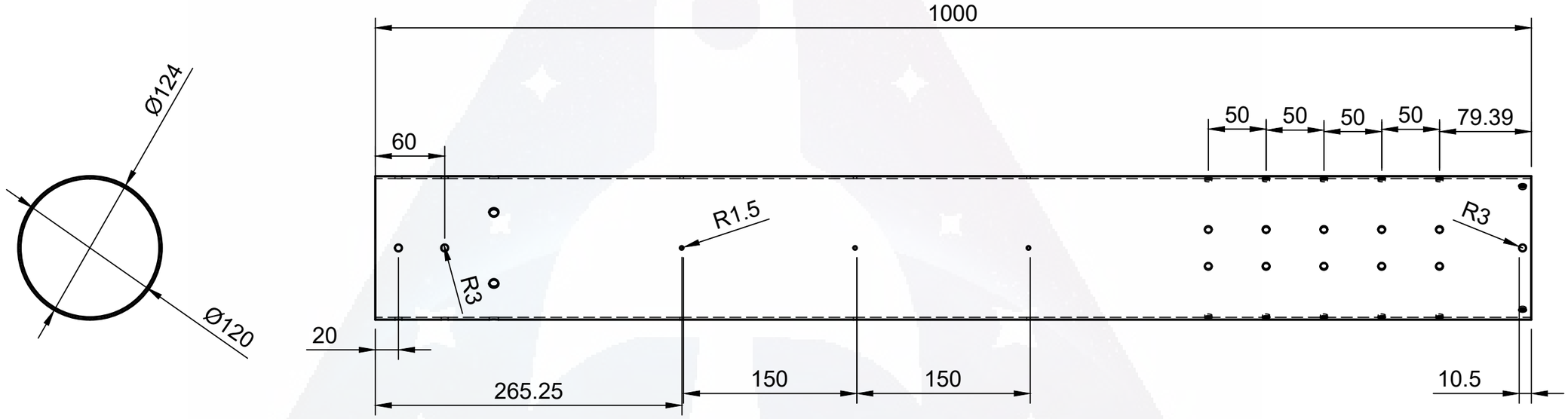

Department	Component	Material	Drawn By	Approved By
Aerostructure	Booster Tube	Fiberglass	Tanmay kanmahale	Aasit Vora

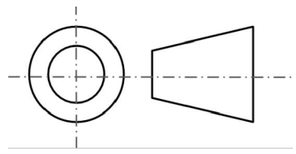

All Dimensions are in mm
Tolerances: ±0.02 mm

Drawing Scale
1:4

Sheet Size	A3	Team Logo	

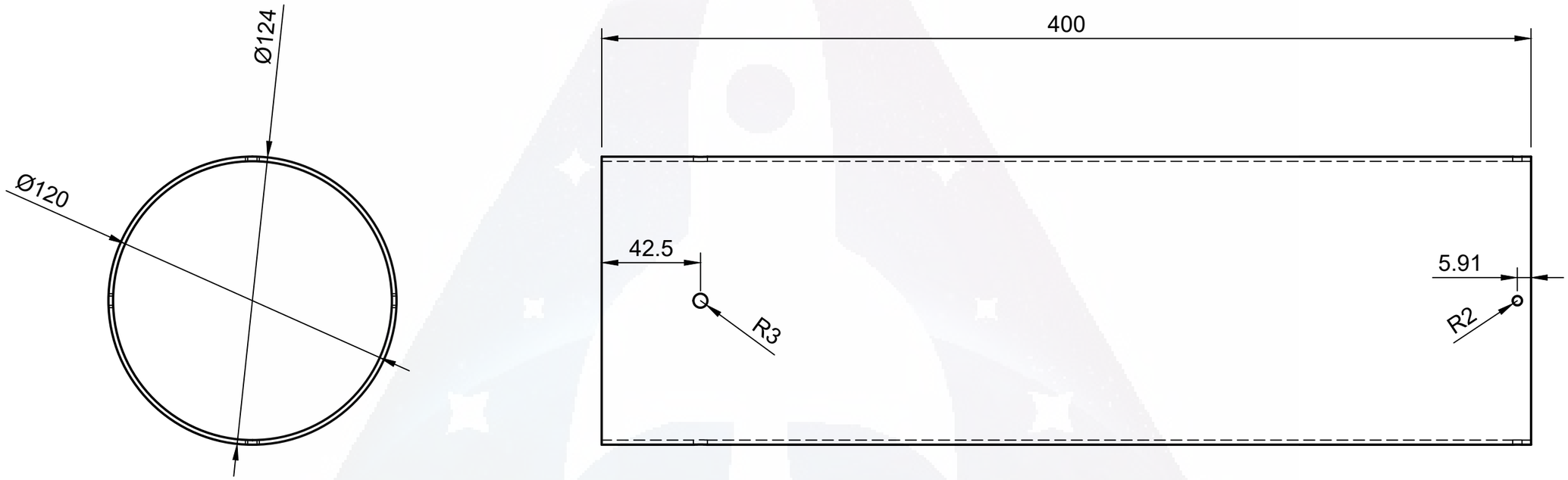

Department	Component	Material	Drawn By	Approved By
Aerostructure	Parachute Bay	Fiberglass	Tanmay Kanmahale	Aasit Vora

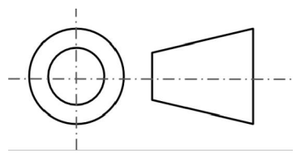

All Dimensions are in mm
Tolerances: ±0.02 mm

Drawing Scale
1:2

Sheet Size	A3	Team Logo	

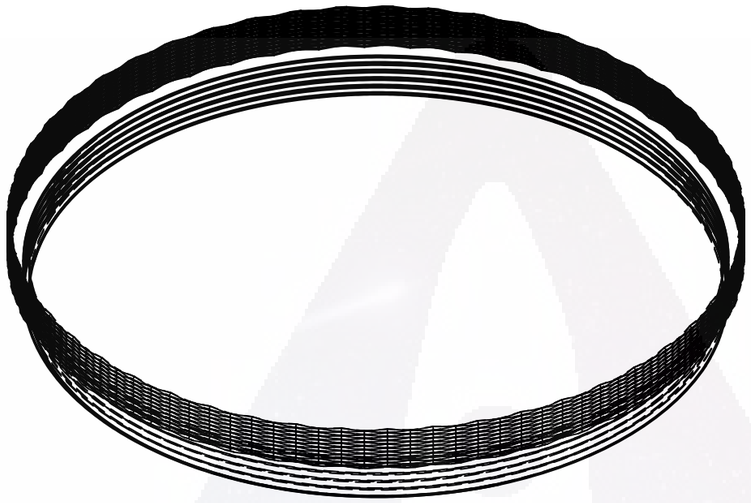

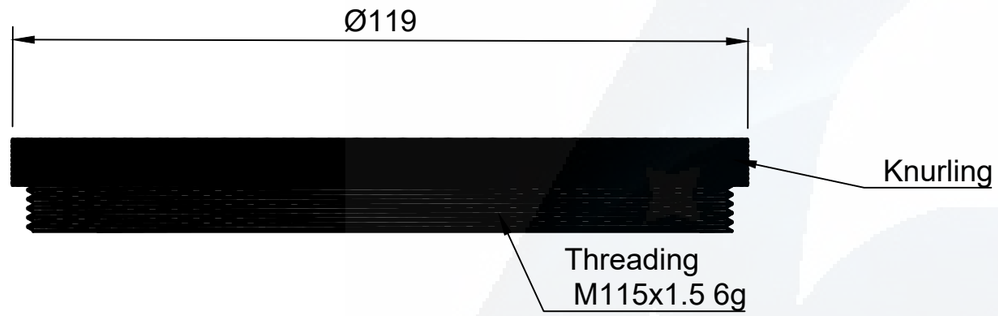

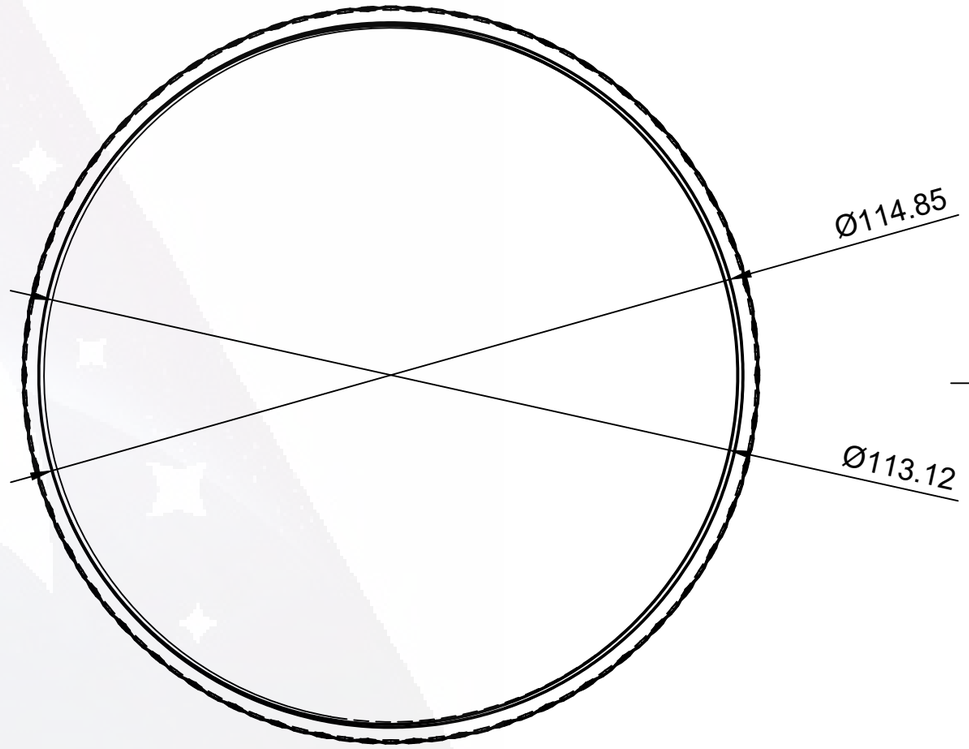

Department	Component	Material	Drawn By	Approved By
Payload	Payload Endcap	Auminum	Tanmay Kanmahale	Aasit Vora

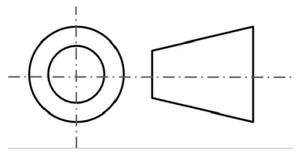

All Dimensions are in mm
Tolerances: ±0.02 mm

Drawing Scale
1:1

Sheet Size	A3	Team Logo	

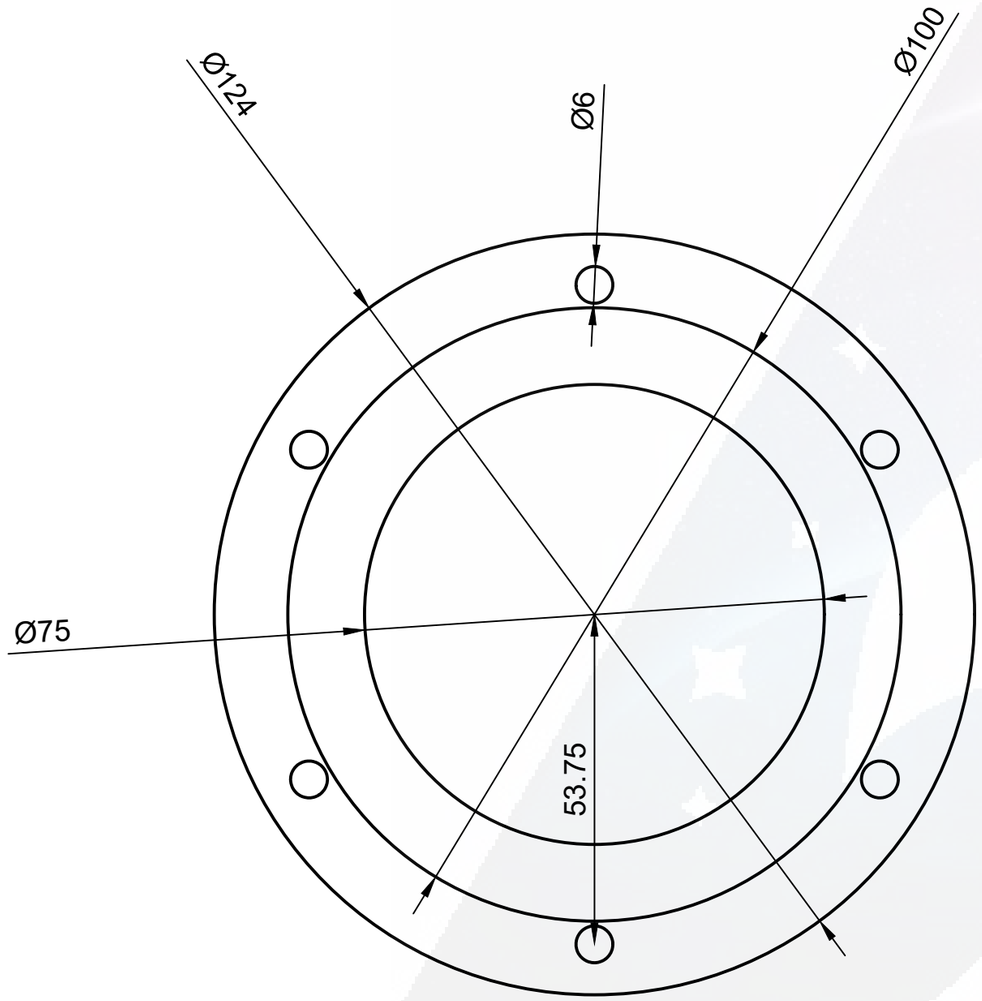

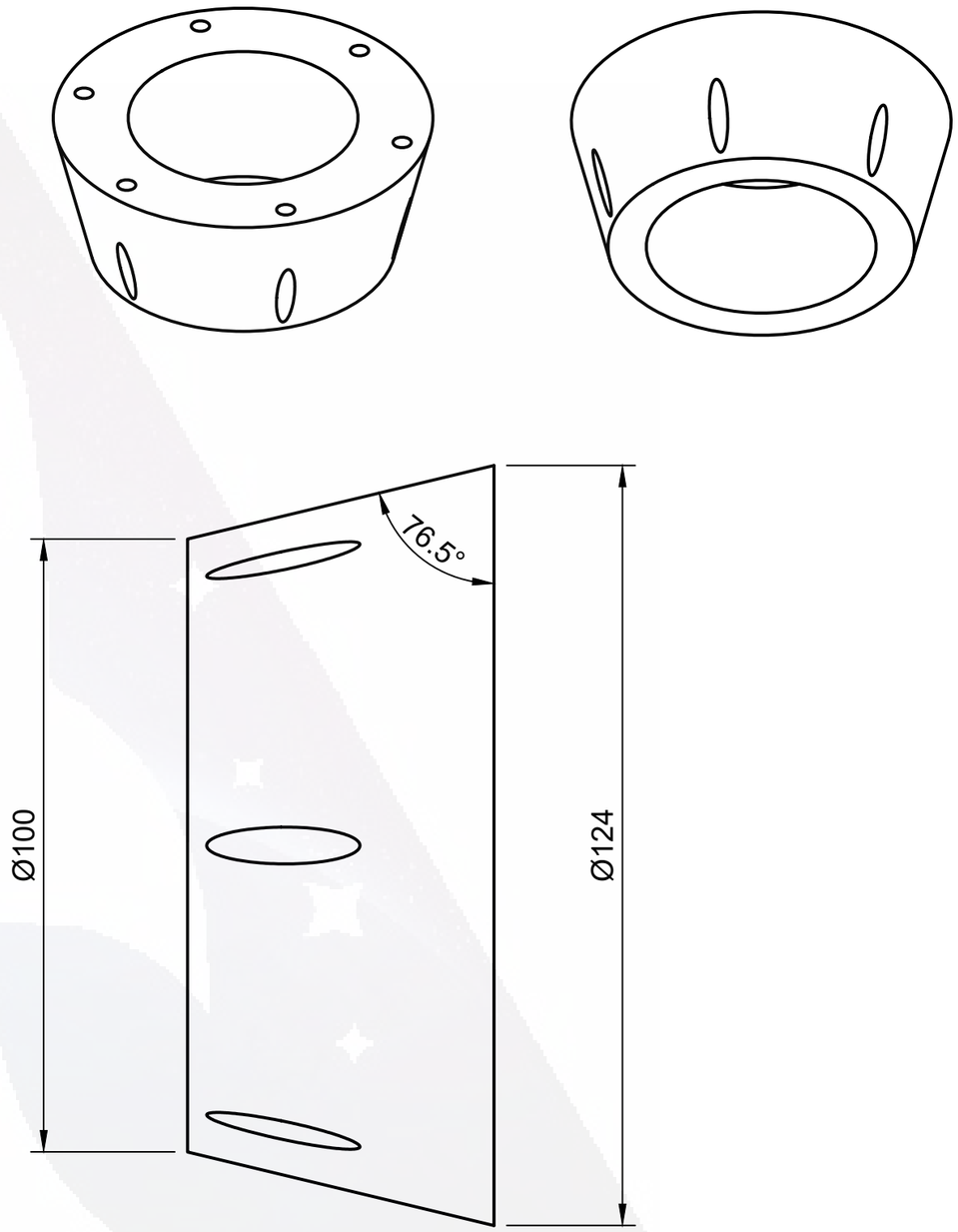

Department	Component	Material	Drawn By	Approved By
Aerostructure	Boat-Tail	ABS	Tanmay Kanmahale	Aasit Vora

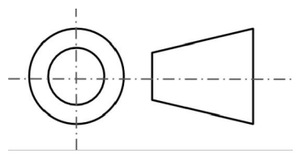

All Dimensions are in mm
Tolerances: ±0.02 mm

Drawing Scale
1:1

Sheet Size	A3	Team Logo	

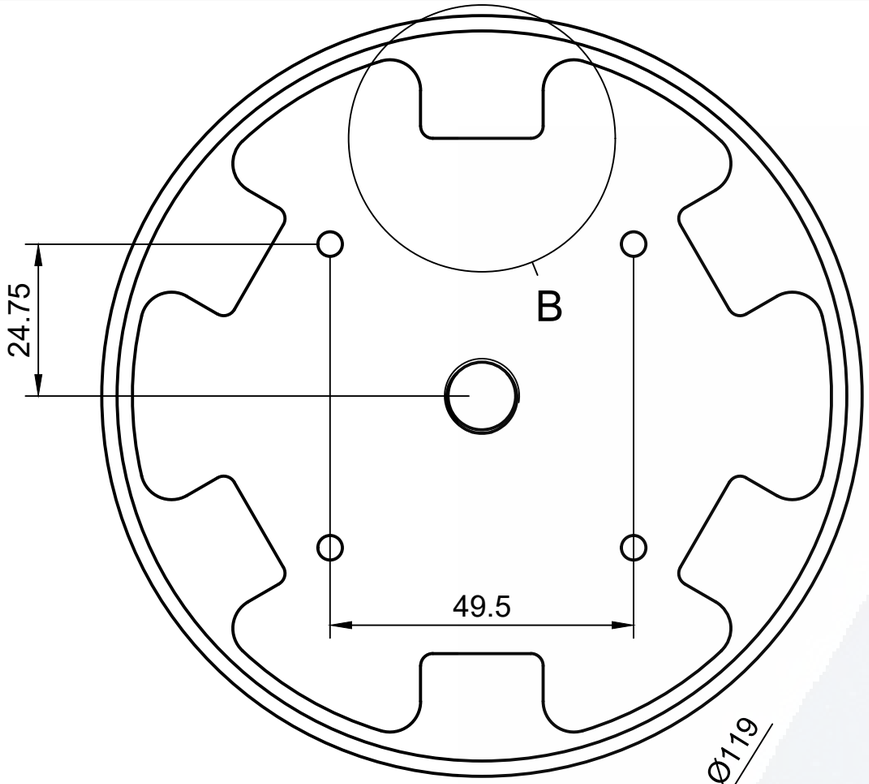

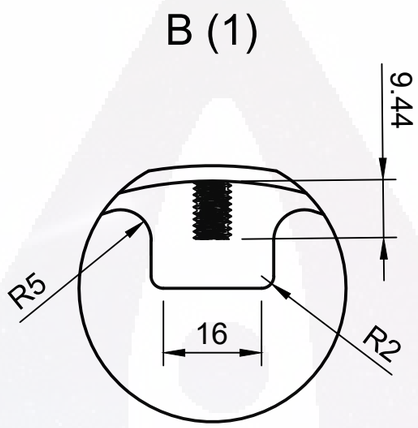

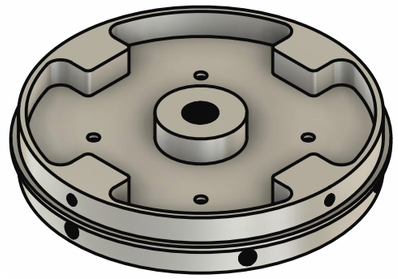

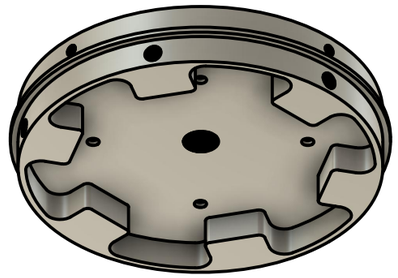

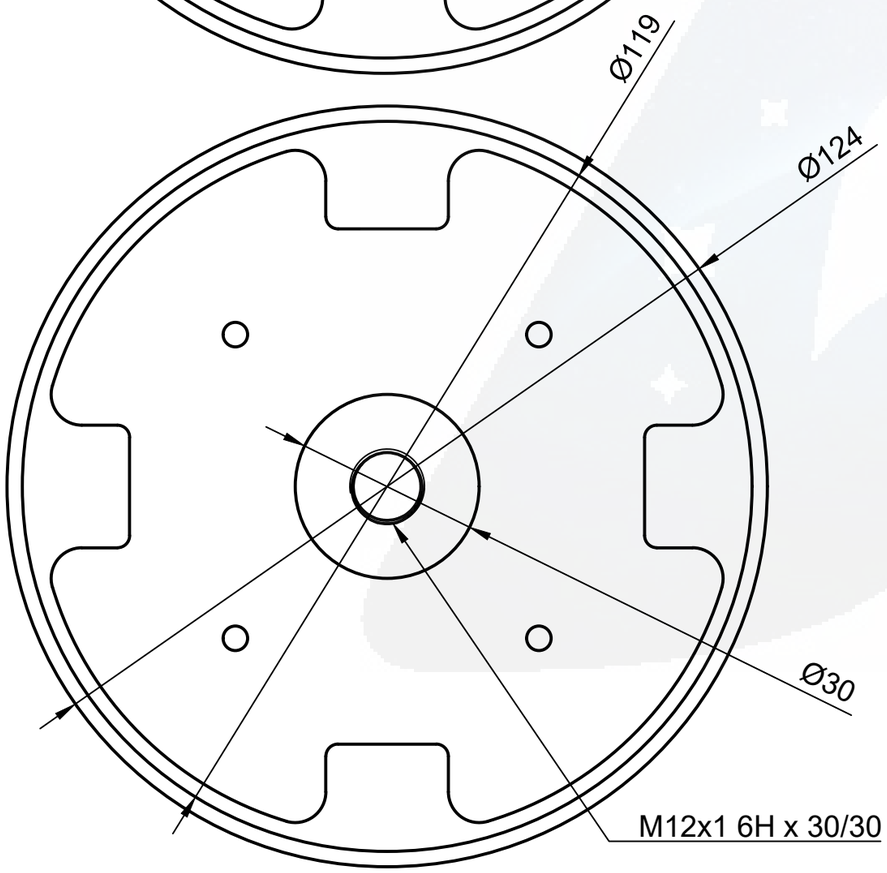

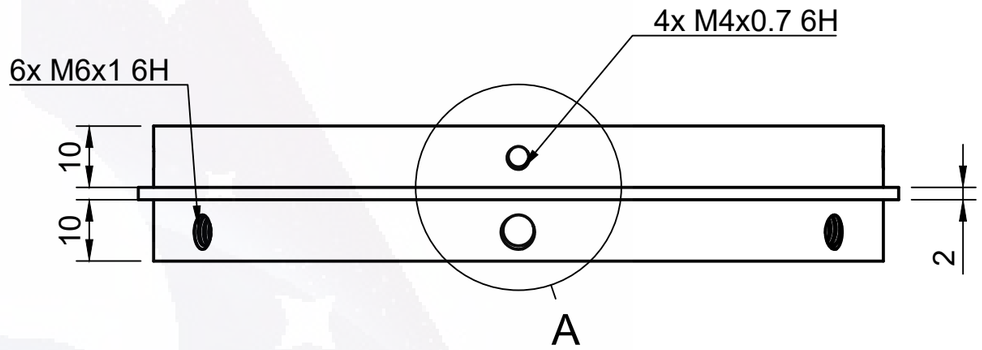

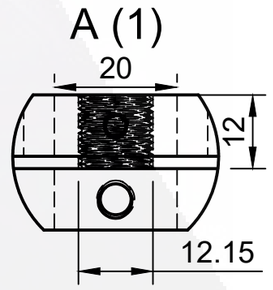

Department	Component	Material	Drawn By	Approved By
Recovery	Recovery Bulkhead	Aluminum	Tanmay Kanmahale	Aasit Vora

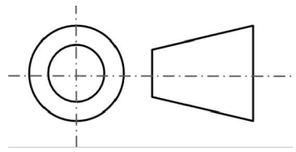

All Dimensions are in mm
Tolerances: ±0.02 mm

Drawing Scale
1:1

Sheet Size	A3	Team Logo	

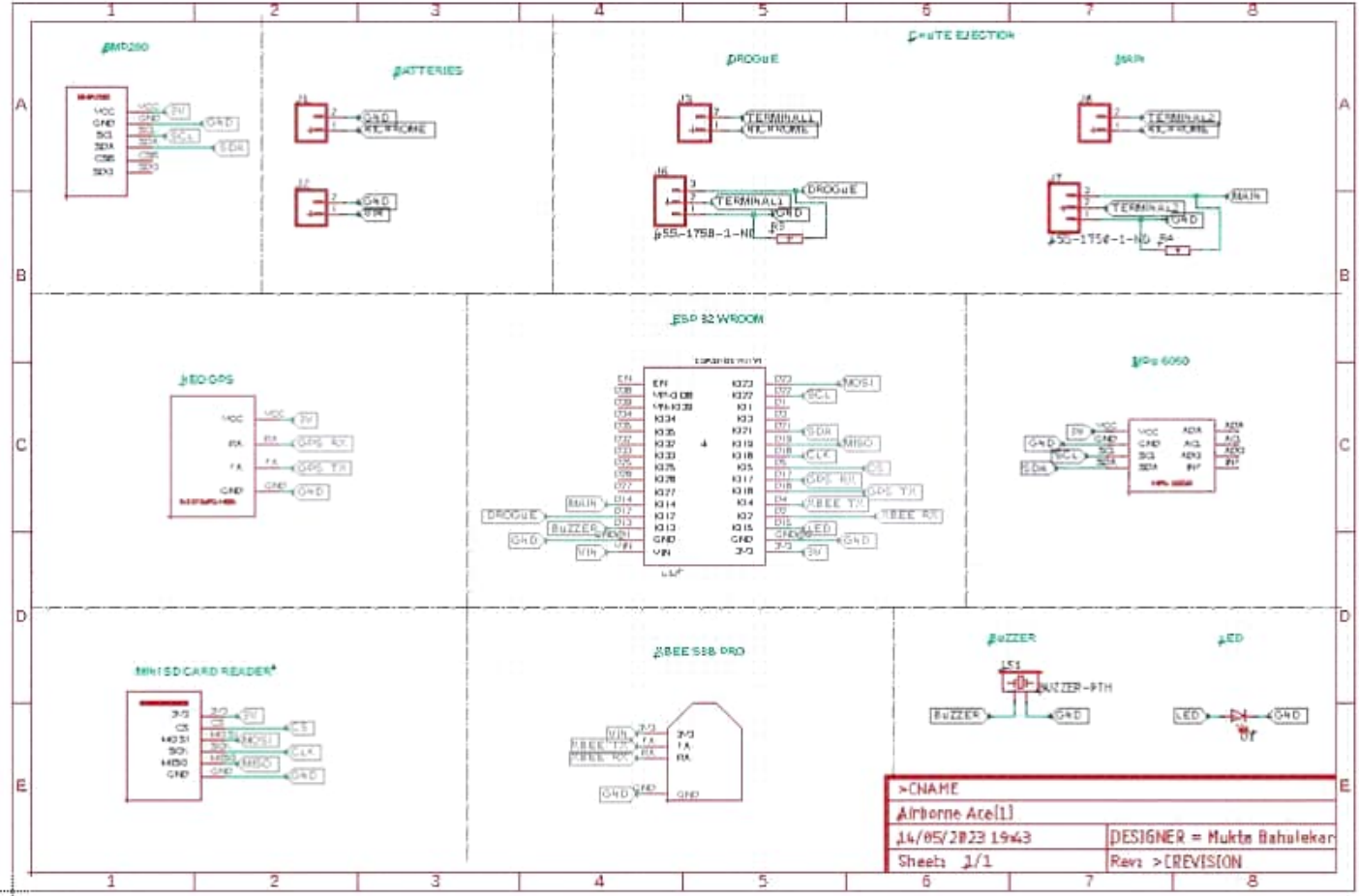
MPU6050
BATTERIES
CHUTE EJECTION
DROGUE
MAIN
TERMINAL1
TERMINAL2
GND
ESP 32 WROOM
GPS 6050
MINI SD CARD READER
XBEE S3B PRO
BUZZER
LED
>NAME
Airborne Ace[1]
14/05/2023 19:43
DESIGNER = Mukta Bahulekar
Sheet: 1/1
Rev: >REVISION

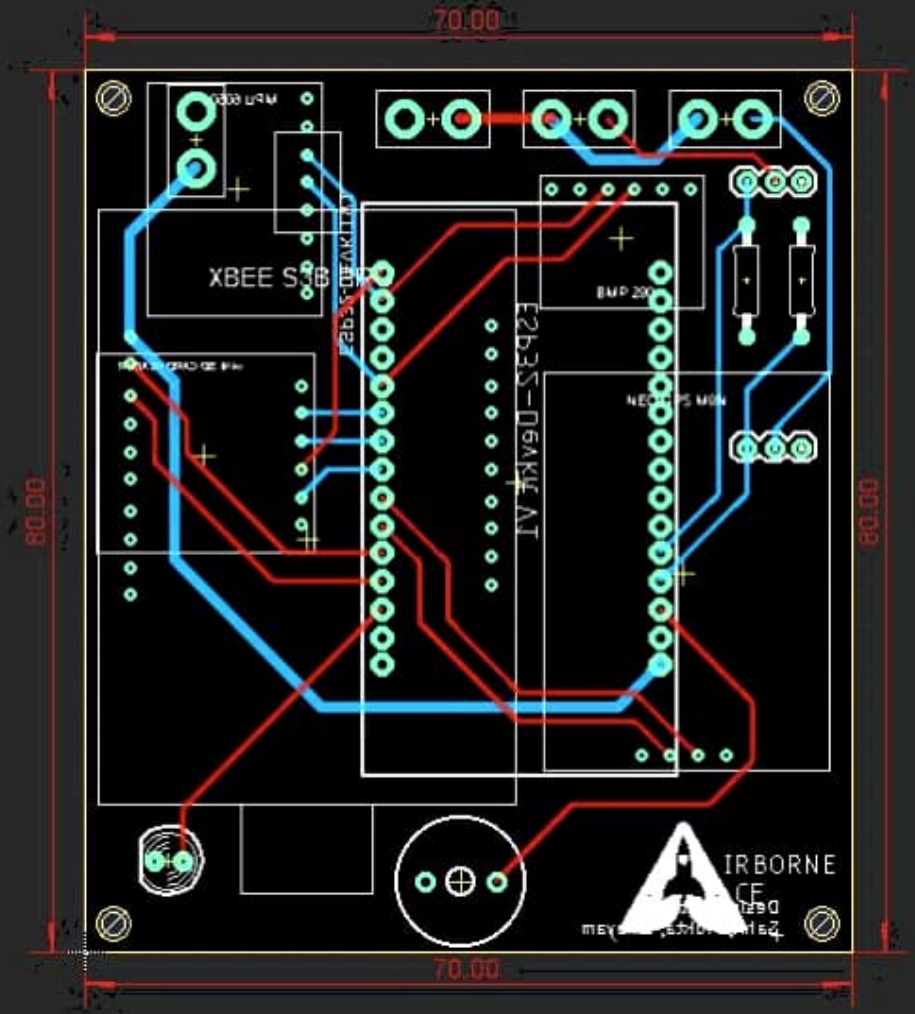
70.00
80.00
XBEE SSB
BMP 280
IRBORNE
70.00
80.00

Acknowledgments

The authors would like to thank the following for their contributions to the project:

KK's Varsha Enterprise and LEO Engineering for helping the team with monetary funds when they needed the most

Aim Precision Industry Pvt Ltd, Prime Industries and Swaraj Industries for machining all metal parts associated with the project

High-On 3D printing service for 3D printing mold parts of the rocket

Carbonblack Composites for providing materials for composite manufacturing and safety equipments

PCBPower for their assistance in fabrication of PCBs for Avionics and Payload.

Sinhgad College of Engineering for providing a workspace to work on the rocket and motor.

Prof. Dhananjay Khankal and Mr. Aasit Vora for his technical and operational guidance in the project

Bill Diesslin, our FOR for his mentorship and guidance throughout the project

ESRA for letting us participate in the competition and guiding the members with their technical expertise

And lastly, **the Rocketeers at STES Rocketry**, to actively participate in an academically rigorous project and completing it in time

References

Periodicals

[1]Tim Van Milligan., "What is the best fin shape for model rockets," *Peak Of Flight*, ISSUE 442, May 2nd 2017.

[2]Zachary Howard ., "How to calculate fin flutter speed," *Peak Of Flight*, ISSUE 291, July 19th 2011.

[3]Tim Van Milligan., "What is an overstable rocket," *Peak Of Flight*, ISSUE 5.

[4]Ashley Van Milligan, "How to calculate fin flutter speed," *Peak Of Flight*, ISSUE 346,August 27th 2013.

[5]Tim Van Milligan., "Selecting rocket motors for your modelst," *Peak Of Flight*, ISSUE 40.

Books

[6]V.B Bhandari., *Design of Machine Elements*, 2nd ed.,Tata McGraw Hill, 2007, Chaps. 2, 7.

[7]Knacke, T.W., 1991, Parachute recovery systems design manual. Naval Weapons Center China Lake CA, Defense Technical Information Center.

Reports, Theses, and Individual Papers

[14]Pepermans, L., Menting, E., Rozemeijer, M., Koops, B., Dahl, N.S., Suard, N., Khurana, S., van Marion, F., Kuhnert, F. and Serman, M., 2017. Comparison of Various Parachute Deployment Systems for Full Rocket Recovery of Sounding Rockets, Comparison of Various Parachute Deployment Systems for Full Rocket Recovery of Sounding Rockets

[15]Rick Newlands, Martin Heywood, Andy Lee, 2016, "Rocket vehicle loads and airframe design," Aspirepace technical papers.

[16]Barrowman. J.S. and Barrowman J.A,1966, "The Theoretical prediction of the centre of pressure," NARAM.

[17]Dr. Gerald M. Gregorek., "Aerodynamic drag of model rockets," TR-11 Model Rocket Technical Report,

[18]Newlands, R., "Rocketry aerodynamics - Aspirespace technical papers," , 2016. URL http://www.aspirespace.org.uk/downloads/Rocketry%20aerodynamics.pdf.

Electronic Publications.

[19]Lostoski, Michael R. Mr; Szucs, Jeff; and Schwenning, Matt., "Structural Design and Fabrication of a Rocket," *Honors Research Projects. 387,* [online journal], URL: "Structural Design and Fabrication of a Rocket" by Michael R. Lostoski Mr, Jeff Szucs et al. .

[20]Tom Benson., "Rocket Stability," *Beginners Guide to Rockets* [online database], URL: NASA: Rocket Stability .

[21]Ricard Nakka., "Fins for Rocket Stability," *Richard Nakka's Experimental Rocketry Website* [online database], URL: Nakka's Experimental Rocketry Site .

[22]Tom Benson., "Area Formula," *Beginners Guide to Rockets* [online database], URL: Area .

[23]Tom Benson., "Shape Effects of Drag," *Beginners Guide to Rockets* [online database], URL: Shape Effects on Drag .

[24]"U.S. Standard Atmosphere," *The Engineering Toolbox* [online database], URL: US Standard Atmosphere Air Properties - Imperial (BG) Units .

[25]Tom Benson., "Rocket Principles," *Beginners Guide to Rockets* [online database], URL: Rocket Principles - Nasa .

[26]Tom Benson., "Rocket Thrust," *Beginners Guide to Rockets* [online database], URL: Rocket Thrust .

[27]Tom Benson., "Four Forces on a Rocket," *Beginners Guide to Rockets* [online database], URL: Four Forces on a Rocket .

[28]"Table of design properties for metric hexagonal bolts M5 to M39" *EurocodeApplied.com.* [online database], URL: Table of design properties for metric steel bolts M5 to M39 - Eurocode 3 .

[29]"Metric steel bolts, screws and studs - proof and tensile strength," *The Engineering Toolbox* [online database], URL: Metric Steel Bolts - Grades and Property Classes .

[30]Daniel Cavender, "NASA High Power Rocketry Video Series Counterpart Documents, [online database], URL: High Powered Video Series Counterpart Documents .

[31]PerfectFlight, "StratoLogger SL100 USer Manual," [online database], URL: SL100 manual version final .

Computer Software

[32]Ansys, Ver Ansys Student, 2021, John Swanson Developer

[33]Open Rocket designing and simulation, Ver OpenRocket 15.03, 2021, Sampo Niskanen Developer

[34]Solidworks, Modelling, Assemblies and Drawing, Ver Solidworks 2020, Dassault Systems Developer

[35]EAGLE, Printed Circuit Board PCB Design, Ver Fusion 360, 2020, Cad-Soft Computer GmbH Developer

[36]Fusion360, Modelling, Assemblies and Drawing, Ver Fusion 360, 2020, Cad-Soft Computer GmbH Developer