REVISIONS			
REV.	DESCRIPTION	FAI / NCMR	ECN
A	INITIAL RELEASE		101624
B	UPDATED CYCLAM DRAWING ON SHEET 2, MATERIALS UPDATED TO 316SS, ADDED CTQ #5 REORDERED CTQ'S. ADDED HARDNESS TO VITON PARTS.		103190
C	UPDATED MODELS PER AVO CARBON UPDATE, INCREASED CHF ON CERAMIC ID, ADDED CTQ #6 AND 7.		ECN-000143

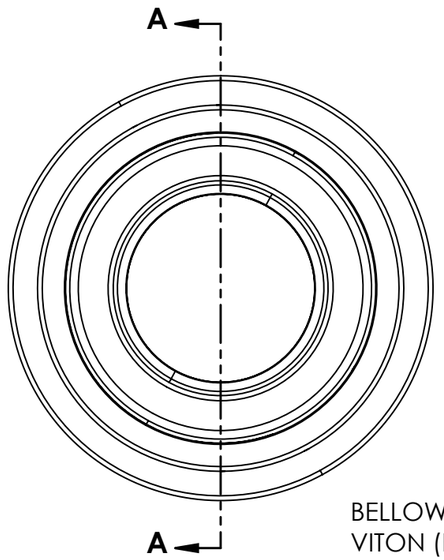

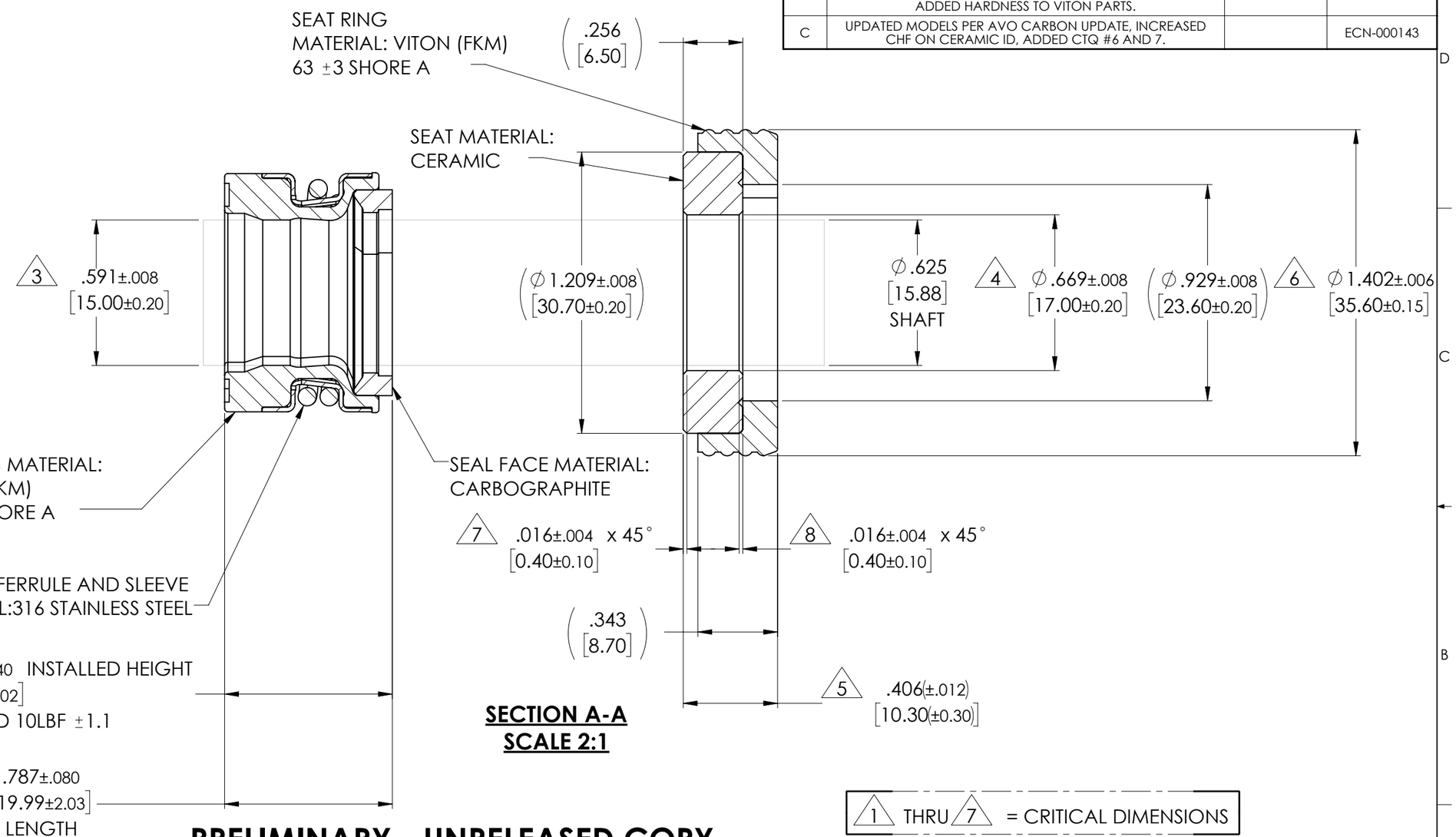

SECTION A-A
SCALE 2:1

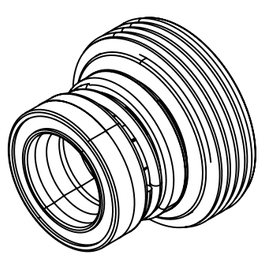

1 THRU 7 = CRITICAL DIMENSIONS

PRELIMINARY - UNRELEASED COPY
FOR REFERENCE ONLY

NOTES:

1. CYCLAM SHAFT SEAL, ASSY NO. 0713.160.0582
2. SEAL MUST HAVE NO VISIBLE LEAKAGE (NO FLUID ACCUMULATION) UNDER NORMAL OPERATING LOAD RANGE WHETHER ROTATING OR STOPPED.
3. SEAL MUST PASS 150-HR HAYWARD STANDARD SEAL ABRASION TEST # ENG0103.
4. SEAL PRESSURE: 290 PSIG MAX; TEMP: 150°F MAX, 3450 RPM.

MATERIAL:
SEE PART DRAWINGS
WEIGHT: **0.02 LBS.**
COLOR: **SEE PART DRAWINGS**

HAYWARD®

DESCRIPTION:
ASSY, SHAFT SEAL 5/8, FKM

SIZE	DWG. NO.	REV
B	SP4000SAVC	C

SCALE: 1:1 | SHEET 1 OF 2

UNAUTHORIZED USE, MANUFACTURE, OR REPRODUCTION IN WHOLE OR IN PART IS PROHIBITED. DRAWING, DESIGN, AND OTHER DISCLOSURES ARE PROPERTY OF: HAYWARD POOL PRODUCTS

BAGUE NCP EN PLACE SUR INTERBAGUE TYPE L
SEAL HEAD NCP / MATING RING ASSEMBLY INSTALLED TYPE L
Coupe D-D / Echelle : 4:1

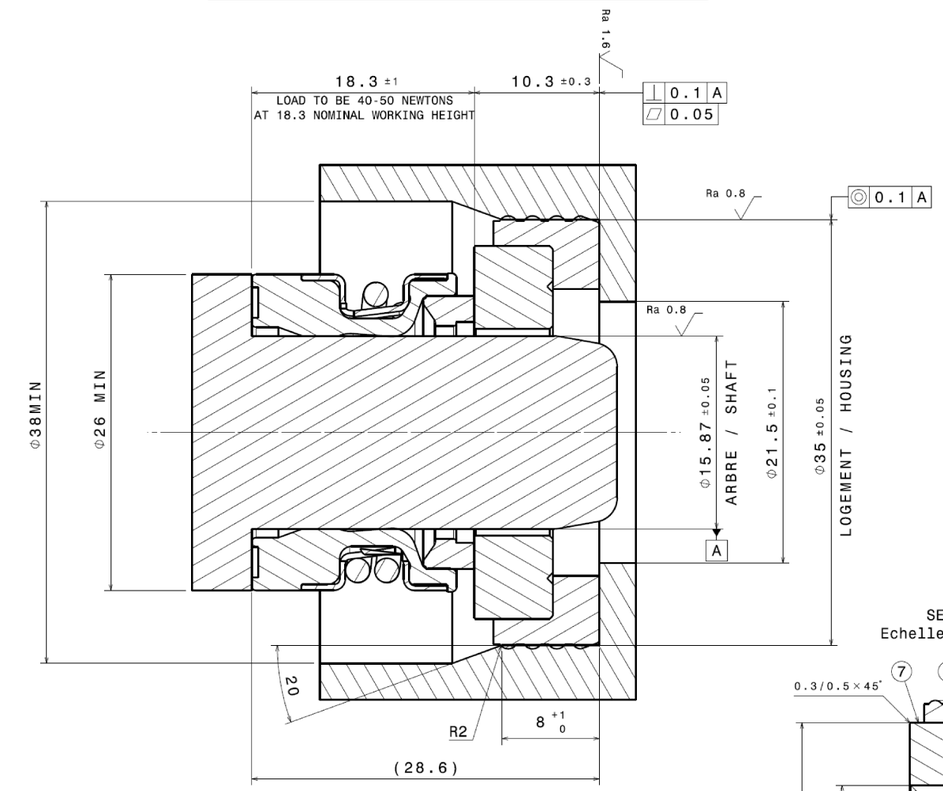

BAGUE A L'ETAT LIBRE / SEAL FREE
Coupe C-C / Echelle : 4:1

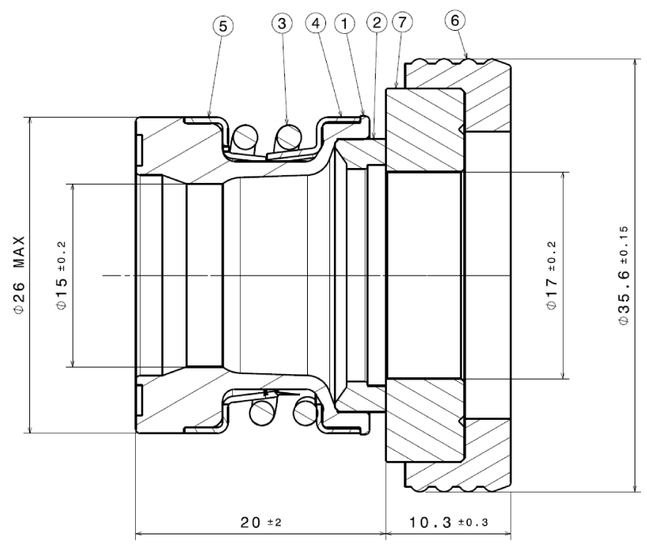

SEAT
Echelle : 3:1

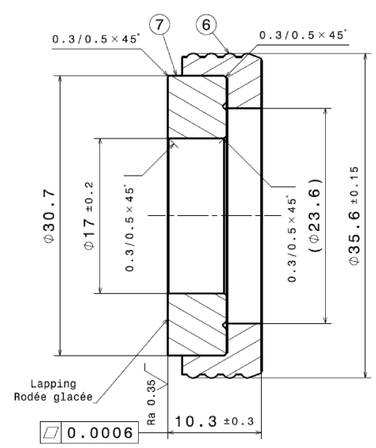

Vue isométrique
Echelle : 2:1

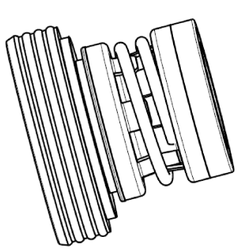

DETAIL BOUT D'ARBRE
DETAIL END SHAFT

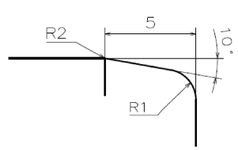

NUMERO/CODE	REV	No	NB	DESIGNATION / DESIGNATION	MATIERE / MATERIAL	QUALITE
2742.167.0410	b	7	1	CONTREBAGUE /SEAT	ALUMINE / CERAMIC 96%	410
2760.163.4150	b	6	1	JONC/ SEAT RING	FKM (VITON) Shore A 63 ±3	150
2700.167.4310	a	5	1	ANNEAU DE MEMBRANE / FERRULE	ACIER INOX MO / STAINLESS STEEL 316	310
2700.167.4310	a	4	1	ANNEAU DE MEMBRANE / FERRULE	ACIER INOX MO / STAINLESS STEEL 316	310
2730.162.0310		3	1	RESSORT / SPRING	ACIER INOX MO / STAINLESS STEEL 316	310
2720.162.5520	a	2	1	RONDELLE DE FROTTEMENT / PRIMARY RING	CARBOGRAPHITE /CARBOGRAPHITE	520
2710.162.3150	a	1	1	MEMBRANE / BELLOWS	FKM (VITON) Shore A 63 ±3	150

Ind	Date	Position	Modification	Dess.
e	03/03/25		NOTE M9171 -added revion of components and seat view.	JLR
d	27/09/24		NOTE M9171 - Adding load and rubber hardness.	JLR
c	09/09/24		NOTE M9171 - Addition of stainless steel grades.	JLR
b	13/12/23		NOTE M9171 - MODIFICATION OF MATING RING SUB DESIGN.	JLR
a	3/2/22		NOTE M9171 - CODIFICATION DES COMPOSANTS EN REERENCE SERIE	JLR

N° CYCLAM	N°Codification	Matière:	Traitement-Protection	Observation
	0713.160.0582 0743.161.3540	310-150-520 410-150		PIECES N° 1,2,3,4,5 PIECES N° 6,7

Affectation: SP4000SAVC - HAYWARD
Echelle: 4/1

cyclam
Garnitures d'Etanchéité Dynamique
75 rue Robert Le Coq
80038 AMIENS
Tél: 03-22-54-59-70
Fax: 03-22-54-59-98

BAGUE D'ETANCHEITE
5/8 " NCP
SEAL HEAD
5/8" NCP

Date:03/02/22 Dess: JLR Verif:
0713.160.0582
Indice: e
Fol 1 / 1

Ce plan est la propriété de CYCLAM S.A.S. Il contient des informations confidentielles et ne peut être reproduit, communiqué ou utilisé sans son autorisation écrite.
The copyright in this drawing is owned by CYCLAM S.A.S. The information contained in it is confidential to this company and must not be disclosed, reproduced or used without the written consent.

DESSIN REALISE EN CAO. NE PAS MODIFIER MANUELLEMENT.

PRELIMINARY - UNRELEASED COPY
FOR REFERENCE ONLY

MATERIAL:

WEIGHT:
COLOR:

HAYWARD®

DESCRIPTION:
ASSY, SHAFT SEAL 5/8, FKM

SIZE	DWG. NO.	REV
B	SP4000SAVC	C

SCALE: 1:1 | SHEET 2 OF 2

UNAUTHORIZED USE, MANUFACTURE, OR REPRODUCTION IN WHOLE OR IN PART IS PROHIBITED. DRAWING, DESIGN, AND OTHER DISCLOSURES ARE PROPERTY OF: HAYWARD POOL PRODUCTS