Quality Alert

SQA Platform

N° of Alert: 2024-JULY-018	*Date 17/07/2024*	*update of Alert:*
Customer Plant: AVO/SCEET Fahs	Supplier: AVO Poitiers	
Customer Contact:CharaabiLassaaad@avocarbon.com	Editor:Brika belgacem	

Description of the problem

1- Porblem Description :the brush was manufactured with nok length (dimension 7,4+/-0,15 not conform in min)
2- Why is it a problem:the brush was too short (the dimension 7,4 is not in specification measured values 7,15mm;6,95mm…)

Part number:	A60110821 '(1026647)	When did it happened:	16/07/2024
Part name:	brush SIM2	Who detected it	Technician
Batch number:	280504	Where was it detected	at incoming inspection
Recuerrence defect:	Yes	How was it detected	by measures
Demerit:		How many parts:	3 pcs

nok Part (Sketch - Picture)

ok Part (Sketch - Picture)

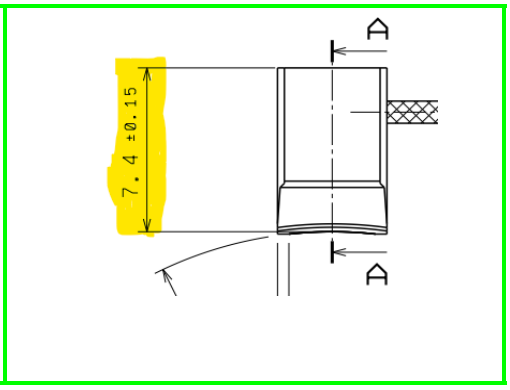

Supplier Porblem Solving Team

Name	Position	Location	Telephone	E.mail
PETITDEMANGE Gwendoline	Customer Quality Technician	Quality		gwendoline.petitdemange@avocarbon.com
METAIS Véronique	Team leader	Production		veronique.metais@avocarbon.com
BILLY Jean-Baptiste	Maintenance manager	Maintenance		jean-baptiste.billy@avocarbon.com
CHARPENTIER Sébastien	Plant Manager	Production		sebastien.charpentier@avocarbon.com

Containment

What are the actions to detect all non-conforming parts in the process flow ?

Location in the process flow:	N° to be sorted	N° Parts sorted	N° nok Parts	PPM	Date	Resp.
Parts at SAME plant:	155 814					
Parts at SCEET Logistics Platform:						
Parts in Transport:						
Parts at Supplier Plateform:						
Parts at Poitiers plant	40360					

How are the ok parts identified ?

How are the ok paletts identified ? NA

First contained shipment information

8D report

1- Quick Response after 24 hours:	23/07/2024
2- 4D report after 5 days:	23/07/2024
3- 6D report after 10 days:	23/07/2024
4- Closed 8D report 1 month:	02/09/2024