Long-term prediction of building energy consumption based on improved LSTM and informer models

Yiming Zhang
School of Electrical Control
Nanjing University of Technology
Nanjing, Jiangsu, China
505533603@qq.com

Jing Yang*
School of Electrical Control
Nanjing University of Technology
Nanjing, Jiangsu, China
muyi_qing@163.com

Ruping Shao
School of Electrical Control
Nanjing University of Technology
Nanjing, Jiangsu, China
njsrp@163.com

Abstract

In recent years, with the rapid development of the global construction industry, the demand for energy has increased significantly, and building energy consumption has been rising. During the operational phase of buildings, there are various variable factors affecting long-term energy consumption. This paper introduces improved LSTM and Informer prediction models. On the one hand, the improved models integrate the Informer into the LSTM to complement each other, mining the potential correlations between features and capturing long-term time series characteristics. On the other hand, the Bayesian algorithm is used for hyperparameter tuning to avoid errors caused by manual parameter adjustments.

CCS Concepts

• **Computing methodologies** → Machine learning; Learning settings.

Keywords

Long-term prediction of building energy consumption, Deep learning, LSTM model, Informer model, Bayesian algorithm

ACM Reference Format:
Yiming Zhang, Jing Yang, and Ruping Shao. 2024. Long-term prediction of building energy consumption based on improved LSTM and informer models. In *2024 5th International Conference on Computer Science and Management Technology (ICCSMT 2024), October 18–20, 2024, Xiamen, China.* ACM, New York, NY, USA, 6 pages. https://doi.org/10.1145/3708036.3708231

1 Introduction

According to the Worldwatch Institute, buildings are the largest consumers of energy, representing 40% of the annual global energy consumption and accounting for 36% of overall carbon emissions, especially in urban regions. [1]. Thus, the question of how to effectively reduce building energy consumption has become a key area of research focus.. Predictive models of energy consumption can provide an effective basis for the management and allocation of building energy.

Building energy consumption data often exhibit characteristics such as nonlinearity, multifactorial influences[2], and significant volatility. The diversity and randomness of load data make prediction challenging and reduce accuracy[3]. Therefore, scholars at home and abroad have conducted in-depth studies. Methods for predicting building energy consumption include physical modelling methods, statistical learning techniques, machine learning approaches, and deep learning methodologies.

Building energy consumption can be classified into two perspectives: a broad scope and a narrow scope. In a broader context, it encompasses the total energy expended across the entire lifecycle, spanning from the production of building materials to construction and subsequent usage. Conversely, in a narrower sense, building energy consumption, also known as operational energy consumption, specifically refers to the energy utilized for sustaining the building's functionalities, which includes lighting, heating, air conditioning, elevator operation, hot water supply, cooking facilities, household appliances and office equipment.Typically, the term "building energy consumption" is used to denote operational energy consumption.

Rahman et al. [4] proposed an RNN-based prediction model for mid-to-long-term energy consumption forecasting in residential and commercial buildings. Building on this, Cai et al. [5] developed an RNN-based prediction model for building energy consumption. With the improvements in RNN, more precise time series deep learning methods like LSTM have been proposed. Muzaffar et al. [6] Presented an energy consumption prediction approach utilizing the LSTM model, where a hybrid model algorithm improves accuracy. Kim et al. [7] combined the LSTM model with convolutional neural networks to predict residential building energy consumption, and the results showed that this method had higher prediction accuracy than the linear regression model. Sehovac's team [8] used GRU, LSTM, and utilizing RNN seq2seq models for the prediction of building energy consumption.

However, the above methods are relatively traditional, and some model parameters cannot be adjusted by training data and need to be predefined. These hyperparameters [9]are set manually, such as by random sampling.

The internal structure of the Informer model reveals its internal mechanisms and the formula principles, deriving the output process of the prediction results. Finally, the improved LSTM-Informer combined model for long-term prediction of building energy consumption is discussed, and a structural diagram is presented to

*Corresponding author.

Permission to make digital or hard copies of all or part of this work for personal or classroom use is granted without fee provided that copies are not made or distributed for profit or commercial advantage and that copies bear this notice and the full citation on the first page. Copyrights for components of this work owned by others than the author(s) must be honored. Abstracting with credit is permitted. To copy otherwise, or republish, to post on servers or to redistribute to lists, requires prior specific permission and/or a fee. Request permissions from permissions@acm.org.
ICCSMT 2024, October 18–20, 2024, Xiamen, China
© 2024 Copyright held by the owner/author(s). Publication rights licensed to ACM.
ACM ISBN 979-8-4007-0999-9/24/10
https://doi.org/10.1145/3708036.3708231

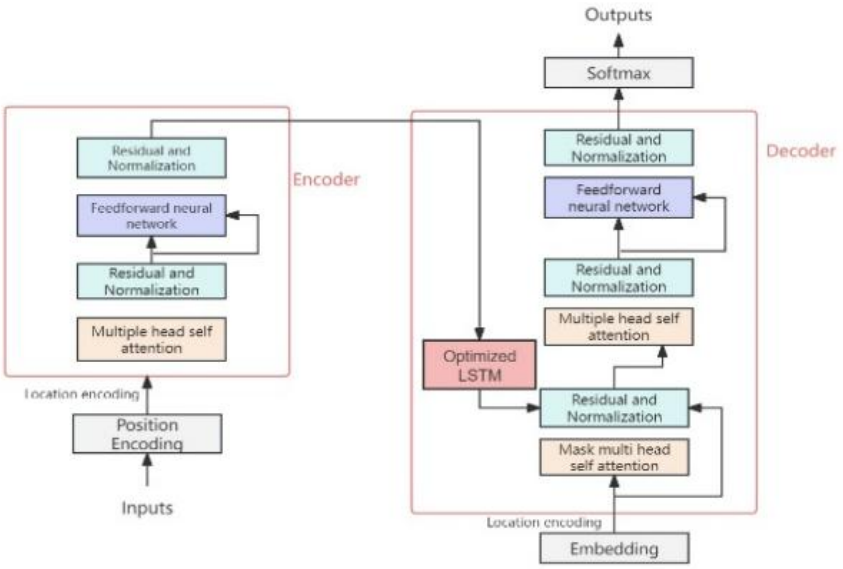

Figure 1: Prediction flow of the combined model.

illustrate the feasibility of the combined model in capturing long-term time series.

2 Research approach

This paper utilises LSTM for front-end processing and Informer for back-end processing. Initially, the preceding segment of the time series data is fed into the LSTM model.The LSTM model gradually updates its hidden state based on the input sequence data, capturing short-term dependencies in the sequence. This process can be seen as a feature extraction process, where the LSTM model transforms the raw sequence data into a new representation.

Informer Back-end Processing. The latent state derived from the LSTM, along with the back part of the original sequence data, is then input into the Informer model. The Informer model employs the latent state of the LSTM along with the backend sequence data to generate long-term predictions. Due to the self-attention mechanism adopted by the Informer model, It is capable of capturing long-term dependencies within the sequence. This process can be regarded as a predictive workflow, wherein the Informer model generates long-term predictions by leveraging the features extracted by the LSTM and the original backend data.The prediction process of the combined model is illustrated in Figure 1.

3 Theoretical and technical introduction

3.1 Long short-term memory neural networks

Long Short-Term Memory (LSTM) denotes a specific type of recurrent neural network (RNN) architecture, tailored to mitigate the challenges associated with long-term dependencies that are commonly observed in conventional RNNs,as shown in Figure 2. The LSTM network incorporates mechanisms like the input gate, forget gate, and output gate to regulate the flow of information,

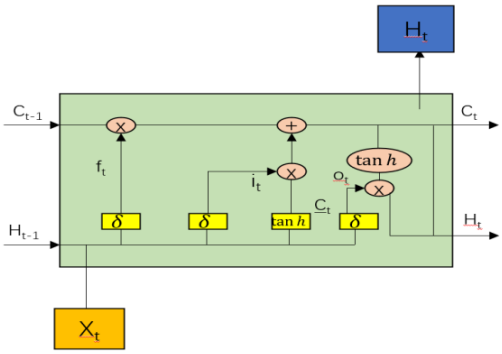

Figure 2: Structure of LSTM neuron model.

thereby effectively addressing the issues of vanishing and exploding gradients. This enables the LSTM to handle long sequences of data more effectively and maintain important information over extended time periods [10]It has four layers of neural networks, and each layer interacts with others in a unique manner, distinct from a singular, straightforward neural network layer.

The role of the forget gate is to selectively retain important information within the unit while discarding information that is not valuable:

$$f_t = \delta(W_t H + b_f) \tag{1}$$

W_f is weight matrix of the forget gate, H is the time output variable, b_f is the paranoid term, and$\delta$is the activation function.

The input gate plays a crucial role in selectively recording important information into the unit and determining the current input

based on the unit's status. The calculation formula is:

$$i_t = \delta(W_i H + b_i) \tag{2}$$

$$\underline{C}_t = \tanh(W_c H + b_c) \tag{3}$$

$$C_t = f_t C_{t-1} + i_t \underline{C_t} \tag{4}$$

W_f is the weight matrix of the input gate, $H$is the output variable at the moment, b_i and $b_c$are the paranoid term, δ, tanhis the activation function, f_t is the output of the forget gate, i_f is the new information to be retained, and $\underline{C_t}$is the control parameter formed by the new data. Finally, the state update is achieved.

The role of the output gate is to ascertain the ultimate output result, relying on the cell state for its determination.The calculation formula is:

$$o_t = \delta(W_o H + b_o) \tag{5}$$

$$H_t = \tanh(o_t C_t) \tag{6}$$

$W_o$is the weight matrix of the input gate, b_o is the paranoid term, and the final result is the output $H_t$value of LSTM and the input value of the next state.

3.2 Bayesian optimisation algorithm

Bayesian optimisation is an approximation method used to optimise hyperparameters by modelling the relationship between the hyperparameters and the model's performance using surrogate functions. This approach iteratively selects promising hyperparameter combinations, ultimately yielding the best-performing hyperparameters. Presented here is an elaborate exposition of the Bayesian optimization process, delving into its underlying principles, methodologies, and computational intricacie.

The mathematical principle of the Bayesian algorithm is:

$$p(f|D_{1:t}) = \frac{p(D_{1:t}|f)p(f)}{p(D_{1:t})} \tag{7}$$

in the formula, $f$is objective function;$D_{(1:t)} = (x_1, y_1)(x_2, y_2)(x_3, y_3).....(x_t, y_t)$ represents the observed set, x represents the decision vector, and y represents the observed values; $p(D_{1:t}|f)$ is the likelihood distribution of representation; $p(f)$is the prior probability distribution of representation$f$; $p(D_{1:t}|f)$is the posterior probability distribution of representation$f$ [11].

The collection function is formulated based on a posterior probability distribution, and the next most promising evaluation point is determined by maximizing this function. The hyperparameter optimization problem can be defined as follows:

$$x_{\min} = \arg\max_{x \in X} f(x) \tag{8}$$

The symbol $x_{\min}$denotes the final optimized hyperparameter, while $f(x)$represents the objective function to be optimized.

3.3 Informer Algorithm

In 2017, Google introduced the Transformer model [12], this demonstrated remarkable modelling capabilities for time series data within the field of Natural Language Processing (NLP). Despite its success, the Transformer model faces challenges when applied to long-term time series prediction, such as high computational complexity, large memory usage, and slower prediction speed [13].

To address these issues, the Association for the Advancement of Artificial Intelligence (AAAI) proposed an improved algorithm

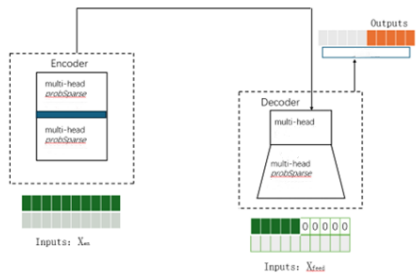

Figure 3: Informer model structure.

based on the Transformer model, known as the Informer algorithm. The Informer algorithm specifically tackles the problem of high computational complexity.

The model structure of Informer is illustrated in Figure 3, where the encoder component is located on the left side, and the decoder component is positioned on the right. This visual representation helps to clearly show the arrangement of the encoder and decoder within the Informer model.

To distinguish between "active" queries, KL divergence is used to measure similarity, and the formula is as follows (9):

$$KL(q||p) = ln \sum_{l=1}^{L_K} \exp(\frac{q_i k_j^T}{\sqrt{d}}) - \frac{1}{L_K} \sum_{j=1}^{L_K} \frac{q_i k_j^T}{\sqrt{d}} - \ln L_K \tag{9}$$

The probability sparse self-attention mechanism is adopted in the Informer algorithm, and Formula (10) is as follows:

$$p(l_i|q_i) = \frac{k(q_i, k_j)}{\sum_i k(q_j, k_l)} \tag{10}$$

where$q_i, K, V$are the input forms, representing query, key, and value, respectively. The key and value are paired, and the query queries the value based on the key. $p(l_i|q_i) = \frac{k(q_i,k_i)}{\sum_i k(q_i,k_l)}$, $p(l_i|q_i) = \frac{k(q_j,k_j)}{\sum_i k(q_j,k_l)}$, $k(q_i, k_j) = \exp(\frac{q_i k_j^T}{\sqrt{d}})$. These values are combined with self-attention, and probability is calculated $p(k_j, q_i)$ based on dot product to obtain output, achieving quadratic time complexity and $O(L_Q, L_K)$ calculating the required spatial complexity.

The constant term is removed, and the sparsity of the i-th query is defined according to the formula provided. (11):

$$u = c * \ln L_Q \tag{11}$$

The first item q_i is the Log Sum Exp (LSE) on all keys, and the second item is the arithmetic mean. If the i query obtains a larger $M(q_i, K)$, then its attention distribution has greater diversity.

Utilizing the aforementioned measurement approach, by enabling each key to concentrate solely on u primary queries, we can derive the Probsparse self-attention formula, as presented in Equation 12):

$$A(Q, K, V) = Soft\max(\frac{\overline{Q}K^T}{\sqrt{d}})V \tag{12}$$

where there exists a sparse matrix of equivalent dimensions $\overline{Q}$ as q, which $M(q_i, K)$is only included in the sparse evaluation in the top u queries, $c$controlled$u$ by a fixed sampling factor, and $u = c * \ln L_Q$. In this way, ProbSparse self-attention only requires dot $O(\ln L_Q)$ products to operate in each query key match, reducing each memory overhead to $O(L_k \ln L_Q)$.

3.4 Evaluation Metrics

This paper utilizes Mean Squared Error (MSE) and Mean Absolute Error (MAE) as key metrics to evaluate and validate the performance of various models, emphasizing their importance in assessing accuracy. These metrics are widely used to measure the precision of predictions in time series forecasting tasks.

$$MSE = \frac{\sum_{i=1}^{n} [f(x_i) - y_i]^2}{n} \tag{13}$$

Mean Absolute Error (MAE) is a way to measure how accurate predictions are. It does this by calculating the average size of the errors, without considering whether they are positive or negative. This means it avoids situations where errors might cancel each other out. The formula for MAE is as follows:

$$MAE = \frac{\sum_{i=1}^{n} |y_t - {y_i}^p|}{n} \tag{14}$$

Prediction accuracy is the proportion of correct results in all predictions. The formula is as follows:

$$\text{a} = \frac{TP + TN}{TP + TN + FP + FN} \tag{15}$$

where TPrepresents true examples, and positive samples are marked as positive examples; FPindicates a false positive example, and the false sample is marked as a positive example; TN represents true and negative examples, and false samples are marked as false examples; FNindicates false counterexamples, and positive samples are marked as false examples.

4 Example analysis

4.1 Data sources

This study used the Tetuan City power consultation project from the Kaggle website as experimental data, dividing De'antu City into three regions[14]. The dataset encompassed 100,756 data points, spanning from January 1, 2017, to December 31, 2018, with a recording frequency of every 5 minutes. The characteristic factors in the dataset are date, time, temperature, humidity, wind, speed, general, diffuse flows, power consumption, dew, point visibility, and sum.

4.2 Data preprocessing

This article divides data preprocessing into five steps to improve prediction accuracy.

(1) Using the values of the first T moments in time series data to calculate the value of T+1, the time series problem is transformed into a supervised learning problem.

(2) After determining the input features, data cleaning is performed on the features to detect null and outliers.

(3) The data is normalised by using the minimum maximum normalisation method combined with the sklearn algorithm.

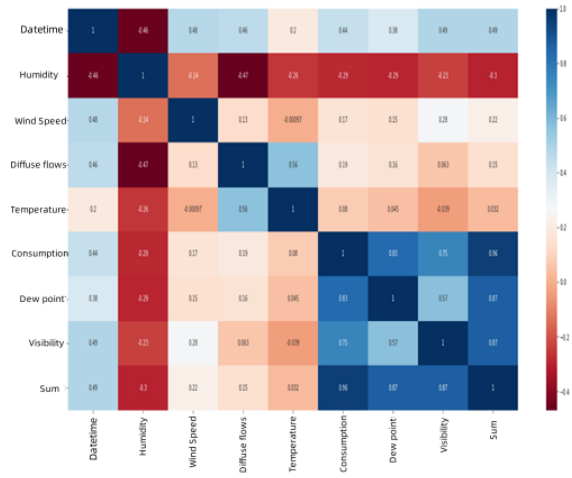

Figure 4: Energy consumption data correlation hotspot.

(4) 80% of the data serves as the training set, while the remaining twenty percent is designated as the testing set for iterative training purposes.

(5) To solve the problem of underfitting, the training and testing sets are dimensionally increased.

4.3 Optimal hyperparameter setting

Before Bayesian optimisation of hyperparameters, a set of LSTM hyperparameter combinations was obtained through 20 repeated experiments using the random sampling method:

Epochs parameter value: 76; Units parameter value: 52; Number of hidden layers: 1120.5.

The optimal combination of LSTM hyperparameters obtained through the Bayesian optimisation algorithm:

Epochs parameter value: 53; Units parameter value: 88; Number of hidden layers: 1400.8861.

4.4 Correlation analysis

This article will use mutual information MI for model input feature selection, which has the advantages of easy to use, high computational efficiency, and the ability to detect any type of correlation. MI can be explained as the uncertainty in how much a given random variable reduces another random variable. The formula is as follows (16):

$$I(X : Y) = H(X) - H(X|Y) \tag{16}$$

$H(X)$ is the information entropy of X, When $H(X|Y)$ is known to be X, the information entropy is brought by Y (conditional entropy). Therefore, MI is used to measure whether there is a relationship between two random variables and the strength of this relationship. The relationship between features is calculated, and the relevant hotspots between building energy consumption are drawn, as shown in Figure 4.

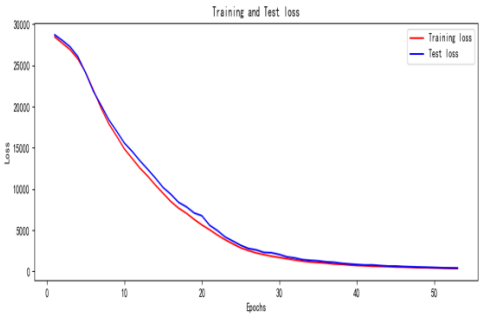

Figure 5: Loss comparison curve.

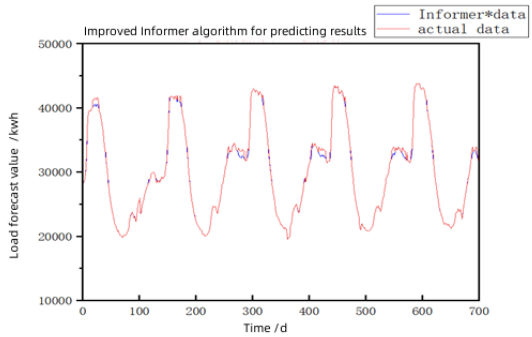

Figure 6: Improved LSTM and informer combination model prediction chart.

Information correlation heat maps can display non-linear and more complex relationships between features. This heat map is particularly suitable for feature selection and data exploration, helping us understand which features have strong mutual information with the target variable and whether there is redundant information between the features.

From the graph, it is evident that there exists a strong correlation between power consumption and the variable in question and temperature, humidity, and building operating time factors. It has a moderate correlation with visibility and dew point values but a weak correlation with wind speed and general diffusion flows. It can be inferred from this data that the operating hours of a building exert a substantial influence on the energy consumption metrics, which aligns with the prevailing understanding. As the building's internal equipment undergoes aging, the extent of wear and tear intensifies, potentially leading to an elevation in energy consumption levels..

4.5 Analysis of prediction results

4.5.1 Training data loss. Figure 5 illustrates the comparison of loss between the training data and test data. The horizontal axis in Figure 5 denotes the number of training iterations, while the vertical axis represents the value of the loss function. An observation from Figure 5 reveals that the loss value diminishes after ten iterations of training, suggesting that the parameters have undergone optimization during the training process. After 20 iterations of training, the two comparison curves gradually overlap and converge, indicating that the model tends to be stable.

4.5.2 Prediction Results. The preprocessed data is trained into the model, the prediction results of the enhanced LSTM and Informer combined model, denoted as Informer * in the subsequent chart, are obtained, highlighting its improved characteristics and advantages, as shown in Figure 6. In Figure 6, the horizontal axis represents the temporal dimension, the vertical axis represents the power load values, the blue curve depicts the predicted results, and the red curve represents the actual energy consumption data. As evident from the figure, the predicted values of the combination model exhibit a close proximity to the validation values, indicating favorable prediction outcomes.

The results show that after 53 iterations of training 103955 sets of data, a prediction accuracy of 93.7% can be achieved. The deviation between the predicted values of the model and the true values primarily occurs at the points of fluctuation in the data curve. The reason for this deviation may be that the short-term load fluctuations do not match the characteristic factors, resulting in insufficient training of the data mapping relationship. The mean squared error (MSE) and mean absolute error (MAE) of the improved LSTM and Informer combination model are 18.446 and 15.5523, respectively. Overall, the combination prediction model performs well and meets the ideal requirements.

4.6 Model comparison results

To verify the predictive performance of the improved LSTM and Informer combination model, this section sets five commonly used benchmark models as controls and conducts comparative experiments with the combination model. They are:

(1) Long Short Term Memory (LSTM), As elaborated in the section, the approach effectively circumvents the issues of vanishing and exploding gradients, ensuring robust performance. Furthermore, it accomplishes efficient processing of long-time series information, highlighting its capability to handle complex temporal data with ease.

(2) Prophet: Prophet is an algorithm developed and open-sourced by Facebook for time series prediction. It is based on an additive model that can automatically detect trends and seasonality in the data and combine them to obtain predicted values.

(3) CNN: Convolutional neural network, which can efficiently extract features and reduce dimensionality, can effectively reduce network training parameters and model complexity due to weight sharing .

On the basis of improving the prediction results of the model, preprocessed data is placed into multiple benchmark models for training, performance comparison experiments are conducted, and evaluation indicators are calculated based on real values to compare the prediction results of these benchmark models with the improved LSTM and Informer combination model (Informer *). The mean squared error (MSE) and mean absolute error (MAE) metrics for the CNN model are 35.7889 and 26.7758, respectively, while for the Prophet model they are 24.5972 and 20.6769, for the LSTM model

they are 23.5866 and 19.2346, and for the Informer model they are 20.6769 and 17.1153.

Comparatively speaking, the improved LSTM and Informer combined model has the best fitting effect with actual energy consumption values, while the fitting effect of the CNN model is poor. From the analysis of predictive performance, although LSTM and Prophet can predict the trend of energy consumption values, there are some differences in corresponding actual energy consumption data points, especially in predicting peak and valley values. The enhanced LSTM and Informer models exhibit superior predictive performance compared to the standalone Informer model, with their predicted values being closer to the actual values. When compared to other benchmark models, the combined improved LSTM and Informer model demonstrates a more precise tracking effect on the actual energy consumption prediction values.

5 Conclusion

Firstly, an explanation was provided for the selected experimental dataset. Secondly, a comprehensive elaboration of multiple benchmark models was provided, followed by an explanation of the construction process of the experimental environment. Subsequently, the model was trained to analyze the loss value of the Loss function during the training process. Bayesian optimization algorithms were employed to search for the optimal hyperparameter combination for the LSTM model. Improved LSTM and Informer models were then generated for long-term prediction of building energy consumption, and an in-depth analysis of the prediction results was conducted. Through performance comparison experiments, it has been demonstrated that the proposed model exhibits superior capability in handling multi-feature long-term building time series data. In summary, in this chapter, we have demonstrated that the improved LSTM and Informer models can more accurately predict building energy consumption issues.

References

[1] Wang W, Hong T, Xu X, Chen J, Liu Z, Xu N. Forecasting district-scale energy dynamics through integrating building network and long short-term memory learning algorithm. Appl Energy, 2019, 248:217–30.

[2] CHENG Yahao, CHEN Huanxin, WANG Jiangyu. Prediction of residential energy consumption based on machine learning [J]. Refrigeration and air-conditioning, 2019, 19(5): 35-40.

[3] WANG Yifei, WANG Hongyuan. Application of building energy consumption prediction technology [J]. Journal Shandong Industrial Technology, 2017, (12): 113-114.

[4] White JA, Reichmuth R. Simplified method for predicting building energy consumption using average monthly temperatures[C]//Iecec 96 Intersociety Energy Conversion Engineering Conference. IEEE, 2002.

[5] Azadeh Sugawara K, Kazama T, Schadschneider A, Chowdhury D. Modelling of self-driven particles: Foraging ants and pedestrians[J]. Physica A: Statistical Mechanics and its Applications, 2006, 372(1): 132-141.

[6] Zhao Chao, Lin Siming, Xu Qiaoling. Energy consumption prediction of university buildings based on GM-RBF neural network [J]. Journal of the Nanjing University of Technology. 2014, 38 (01): 48-53.

[7] Kim TY, B.Predicting residential energy consumption using CNN-LSTM neural-networks[J]. Energy, 2019, 182: 72-81.

[8] Sehovac L, Nesen C, Grolinger K. Forecasting building energy consumption with deeplearning: A sequence to sequence approach[C]/2019 IEEE International Congress onInternet of Things (ICIOT). IEEE, 2019, 108-116. Cui Jiaxu, Yang Bo Summary of Bayesian Optimization Methods and Applications [J]. Journal of Software. 2018, 29 (10): 68-90.

[9] Shen Kuo, Zhu Yifan, Meng Yixiang, Li Haiji LSTM high-speed traffic flow prediction based on Bayesian optimization [J]. Modern Computer. 2022, 28 (11): 51-55 Sharad Sharma, Kola Ogunlana, David Scribner. Modeling human behavior during emergency evacuation using intelligent agents: A multi-agent simulation approach[J]. Information Systems Frontiers, 2018, 20(4): 741-757.

[10] Louis Mark Candanedo, Fronick Feldheim, B. Dominique de la Mikes. Data-driven prediction models of energy use of appliances in a low-energy house [J]. Energy and Buildings, 2017, 140: 81-97.

[11] Vaswanni A, Shazeer N, Parmar N, *et al.* Attention is all you need[C]. Advances in neural information processing systems, 2017, 5998−6008.

[12] Vaswani A, Shazeer N, Parmar N, *et al.* Attention is all you need[J]. Advances in Neural InformationProcessing Systems, 2017, 30

[13] Li Longxiang, Peng Chen, Li Jun, Lu Rongbo. Research on urban residential load forecasting based on Informer [J]. Journal of Huaihua University, 2022, 41 (05): 48-53.

[14] Tetuan City power consumption. A repository that will contains all the code used-tomake the article related to the articles the kaggle dataset[EN/OL]. 2021, 01-26. https://www.kaggle.com/datasets/gmkeshav/tetuan-city-power-consumption.