Embedding Speech Temporal Information in Pretrained Language Models for Sentiment Analysis

Xin Liu
Neusoft Medical Systems Co., Ltd
Shenyang, Liaoning, China
liu.x_neu@neusoftmedical.com

Min Wang
Neusoft Corporation
Shenyang, Liaoning, China
wang-min@neusoft.com

Mengtian Huang
School of Computer Science and Engineering
Northeastern University
Shenyang, Liaoning, China
2171866@stu.neu.edu.cn

Chuang Dong*
School of Computer Science and Engineering
Northeastern University
Shenyang, Liaoning, China
2110667@stu.neu.edu.cn

Abstract

Multimodal Sentiment Analysis is a task aimed at enabling computers to understand human emotions by learning representations from different modalities. Current mainstream methods primarily focus on cross-modal interactions, overlooking the impact of diverse data characteristics on sentiment analysis tasks. Therefore, our focus shifts towards the data itself, with the goal of extracting more nuanced sentiment representations directly from raw data. In this paper, a Dynamic Speech Temporal Module (D-STEM) is proposed, which employs three speech temporal enhancement steps to extract hierarchical temporal emotion representations from speech signals. Additionally, we dynamically embed the obtained speech temporal information into a pre-trained language model, resulting in the proposed speech-text sentiment analysis architecture. With just a few training steps, it can adapt to multimodal tasks. We evaluated our approach on the multimodal public sentiment datasets CMU-MOSI and CMU-MOSEI. Experimental results demonstrate that our method outperforms previous baseline models and text-only fine-tuning methods.

CCS Concepts

• **Computing methodologies** → Artificial intelligence; Natural language processing.

Keywords

Multimodal sentiment analysis, Pretrained language model, Speech temporal modeling

ACM Reference Format:
Xin Liu, Min Wang, Mengtian Huang, and Chuang Dong. 2024. Embedding Speech Temporal Information in Pretrained Language Models for Sentiment Analysis. In *2024 5th International Conference on Computer Science and Management Technology (ICCSMT 2024), October 18–20, 2024, Xiamen, China.* ACM, New York, NY, USA, 6 pages. https://doi.org/10.1145/3708036.3708088

*Corresponding author.

Permission to make digital or hard copies of all or part of this work for personal or classroom use is granted without fee provided that copies are not made or distributed for profit or commercial advantage and that copies bear this notice and the full citation on the first page. Copyrights for components of this work owned by others than the author(s) must be honored. Abstracting with credit is permitted. To copy otherwise, or republish, to post on servers or to redistribute to lists, requires prior specific permission and/or a fee. Request permissions from permissions@acm.org.
ICCSMT 2024, October 18–20, 2024, Xiamen, China
© 2024 Copyright held by the owner/author(s). Publication rights licensed to ACM.
ACM ISBN 979-8-4007-0999-9/24/10
https://doi.org/10.1145/3708036.3708088

1 INTRODUCTION

The remarkable growth of social networks and video platforms has provided broader avenues for people to express their emotions in more diverse ways. Human activities on social media generate a large amount of rich emotional information, which provides sufficient data support for Multimodal Sentiment Analysis (MSA) [1]. Early sentiment analysis (SA) methods were studied for single data sources that independently analyzed sentiment information in text, speech, or visual signals. However, unimodal data contains limited emotional information, and in some cases, traditional methods that rely on only one data source for computation are difficult to provide accurate emotion judgments. The MSA approach differs from conventional sentiment analysis by leveraging multiple data sources to enhance decision-making accuracy. By integrating various modalities of data, MSA optimizes results and boosts the efficacy of decision-making processes through enhanced information utilization [2]. In past MSA research, text is an essential modality that expresses emotions by exploring relationships between words and phrases[3]. In daily interactions, text is frequently complemented by speech, with the emotional cues in speech data manifesting through dynamic shifts in features like pitch, volume, and various frequency metrics. The convergence of textual and audio emotional content yields a richer array of emotional features, enhancing the depth and breadth of emotional understanding.

The research focus of mainstream MSA approaches tends to center around cross-modal interactions with multimodal data, ranging from cross-modal interactions with attentional mechanisms to tensor fusion-based mechanisms. Despite advancements, fusion techniques that integrate modalities face challenges stemming from the heterogeneous disparities inherent in different modalities. In addition, we would like to focus on the impact of the properties of different modal data on affective tasks. In past research, it has been shown that the use of temporal modeling approaches to capture the dynamics of speech signals has led to excellent progress in the field of speech emotion extraction[4]. Influenced by speech temporal modeling networks, we therefore wish to learn to capture the underlying data representations from the raw audio signals and feed

this information into language model as contextual complementary information at the embedding layer along with the text modality.

This paper introduces a framework for speech-text sentiment analysis tasks comprising a pre-trained language model and the Dynamic Speech Temporal Enhancement Module (D-STEM). It's main objective is to dynamically extract the temporal representations of speech from the raw audio, The framework aims to refine the pre-trained language model for multimodal tasks by incorporating audio information to enhance the text modality. Key contributions of this paper include:

A novel framework is introduced to strengthen the text representation within a pre-trained language model by integrating speech temporal details. This framework includes a specialized module for enhancing speech temporal representation. This module dynamically learns time-series representations from raw audio, which are then integrated into the pre-trained language model as cross-modal cues. Extensive experiments on two public multimodal sentiment datasets demonstrate the effectiveness of this approach, showcasing its superiority over current multimodal baseline techniques and traditional text-only fine-tuning methods.

2 RELATED WORKS

2.1 Multimodal Sentiment Analysis

The recent advancements in MSA have led to the categorization of three distinct types based on their methodological focuses: feature fusion-based, multi-task-based, and pre-trained language model-based approaches. The method based on feature fusion primarily focuses on the extraction and fusion of features. Zadeh et al. [5] proposed the Tensor Fusion Network (TFN), which processes input features from different modes separately through a modal embedding subnetwork and simulates modal interaction in the tensor fusion layer. Wang et al. [6] developed a model that dynamically adjusts words to facilitate multimodal fusion. This is achieved by capturing the fine-grained structure of nonverbal behavior at the subword level. Yu et al.'s multi-task sentiment analysis network [7] effectively captures both consistency and disparity information from multimodal data through joint training of one multimodal task. Zhang et al. [8] utilized a multi-task learning approach by introducing two auxiliary tasks to assist upstream models in obtaining more distinctive and adaptable shared representations. The method based on pre-training language models consistently achieves superior performance due to its utilization of prior knowledge acquired from training on extensive corpus datasets and its enhanced ability in representation learning. Rahman et al. [9] proposed a component that generates offsets for internal representations of visual and sound modalities, thereby adapting the internal states of XLNet [10] and BERT and models.

The perspective of the multimodal sentiment analysis method primarily focuses on cross-modal interaction. This involves either designing a cross-modal interaction module to embed or integrate existing non-text representations into the pre-trained language model or designing multiple cross-modal Transformer structures with constraints. These methods aim to efficiently fuse cross-modal representations but overlook the extraction of more comprehensive emotional representations from non-verbal data. In this study, we introduce a multimodal sentiment analysis network that leverages pre-trained language models. To tackle the task of s sentiment analysis in audio text, we introduce D-STEM, which differs from previous work by utilizing three types of time series networks to capture emotion representation that includes speech timing information from the original audio and dynamically injects it into the pre-trained language model as a cross-modal prompt for enhancing its performance in downstream tasks.

2.2 Speech Temporal Modeling Networks

The primary challenge in speech processing lies in feature extraction. Recently, deep learning methods based on discrimination have been able to learn continuous representations from raw audio data through end-to-end approaches such as CNNs [11], and RNNs, which contain multiple layers to enhance discriminative capabilities while reducing reliance on manual feature engineering. Furthermore, temporal modeling techniques have emerged as predominant methods in Speech Recognition and Speech Sentiment Analysis, enabling the dynamic capture of contextual information within speech signals. For instance, Rajamani et al. [12] proposed a new GRU unit by integrating attention activation function after exploring the internal structure of time modeling network; Wang et al. [13] designed a two-layer LSTM architecture that harvests temporal representations from MFCC features and raw audio signals for affective prediction. Zhang et al. [14] introduced an adaptive attention mechanism that operates based on the frequency dimension, aiming to enhance the representational capacity of TCN. [15]. We propose a dynamic speech temporal enhancement module (D-STEM) that effectively learns continuous speech emotion representation from the original speech signal through three stages of temporal enhancement steps. The acquired emotion representation is integrated into the embedding layer of a pre-trained language model to enhance its ability in discriminating emotions for downstream tasks.

3 APPROACH

The paper introduces frameworks that can handle both raw audio and text inputs efficiently. This model demonstrates excellent performance in downstream tasks with minimal pre-training and fine-tuning. The architecture of the proposed framework comprises a pre-trained Transformer-style encoder and a dynamic speech timing enhancement module, as depicted in Figure 1.

The framework's input comprises two components: text sentences and raw audio data. Firstly, the raw audio will pass through the D-STEM, the original audio undergoes processing through the D-STEM to extract enhanced speech temporal affective features. Subsequently, sentences are tokenized using the pre-trained language model, wherein they are segmented into word-level tokens denoted as $X_t = [[cls], E_1, E_2, \ldots, E_n]$. Speech emotion representations serve as cross-modal cues alongside word-piece tokens, forming the multimodal input into the pre-trained language models: $X_{at} = [[cls], a_{pt1}, a_{pt2}, E_1, E_2, \ldots, E_n]$. Here, X_{at} signifies the final multimodal input, where a_{pt1} and a_{pt2} denote the cross-modal speech prompts. We added positional and modal embeddings to the original embedding layer, which provides temporal information to the input text tokens and distinguishes between different modal inputs.

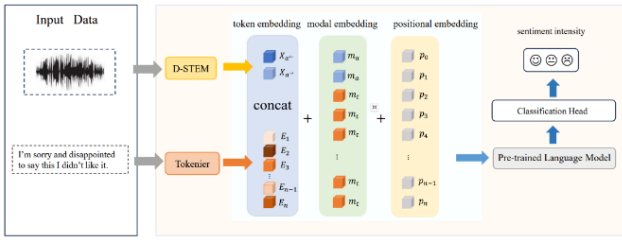

Figure 1: Our proposed framework receives raw text and audio as inputs and injects enhanced temporal audio representations in the embedding layer. In addition, we design a modal embedding layer to distinguish between inputs of different modalities, as well as a positional embedding layer to add temporal information to the text modality. Subsequently, cross-modal fusion of data with different time-steps is achieved by a multi attention mechanism for language models.

3.1 Task Setup

Our objective is to perform emotion detection based on the speech and text signals in dialogue. Our strategy is to sufficiently learn the temporal information from the raw audio signal and inject it into the embedding layer of a pre-trained language model to provide cross-modal guidance. Each speech segment S consists original audio sequence S_a and its corresponding ASR-transcribed text S_t. For text processing, we employ the Tokenizer associated with the pre-trained language model to process features of the text modality data, denoted as $X_t \in R^{T_l \times d_l}$, where T_l represents the number of tokens. We employ the suggested D-STEM for representation learning in the speech modality data, with further elaboration on its specifics to follow.

Given a speech segment S, the framework aims to predict the emotional intensity y of S, where $y \in [-3, 3]$ is a continuous variable representing emotional tendencies, with $y > 0$ indicating positive emotions, $y < 0$ indicating negative emotions, and $y = 0$ indicating neutral emotions.

3.2 Dynamic Speech Temporal Enhancement Module

We need to train a unimodal speech feature extractor to dynamically extract the speech timing representation from the raw audio. We design a three-stage speech timing enhancement step by reference to adopting the ideas of various speech timing enhancement networks. Subsequently, a relatively compact spatial head is trained at the uppermost layer of the representation to transform the speech signal into word tokens.

3.2.1 Continuous Speech Extraction. A fixed-parameter convolutional neural network (CNN) of Wav2vec2.0 [16] to extract audio timing features from audio and learn continuous audio representations. Then, a speech timing coding structure is employed to enhance contextual associations in the speech timing representations and obtain speech timing emotion information.

$$\Phi = CNN\left(\omega; \theta_w\right), \Phi = \left\{\phi_1, \phi_2, \ldots, \phi_t; \phi_i \in \mathbb{R}^{d_a}\right\} \tag{1}$$

Where ω is the raw audio of the input sentence. θ_w denotes the pre-training parameters from Wav2vec2.0, and ϕ_i denotes the speech latent features for T_a time step.

3.2.2 Bidirectional Gated Recurrent Unit Network. The continuous audio representations are inputted into the Bidirectional Gated Recurrent Unit (BiGRU) [17] to strengthen contextual connections within the speech timing representations. BiGRU is a lighter alternative to LSTM and RNN with comparable performance. Bidirectional temporal information is obtained from both front and back dimensions, which helps to learn richer contextual information.

$$\Phi_i^{\leftarrow}, \Phi_i^{\rightarrow} = BiGRU\left(\Phi_i\right) \tag{2}$$

$$\Phi = \left\{\left[\psi_1^{\leftarrow}, \psi_2^{\leftarrow}, \ldots, \psi_n^{\leftarrow}\right], \left[\psi_1^{\rightarrow}, \psi_2^{\rightarrow}, \ldots, \psi_n^{\rightarrow}\right]\right\} \tag{3}$$

The representation vector for the ith sentence in Φ consists of $\Phi_i = \{\phi_{i,1}, \phi_{i,2}, \ldots, \phi_{i,t}\}$, where $\Phi_i^{\leftarrow} \in \mathcal{R}^{T_a \times d_a}$ and$\Phi_i^{\leftarrow} \in \mathcal{R}^{T_a \times d_a}$, where a denotes the features generated by BiGRU in two dimensions.

3.2.3 Speech Temporal-Cared Block. We designed Temporal-cared Blocks to capture the dependencies between speech representations at different dimensional time steps before and after, respectively, and The specific structures of these sub-blocks are illustrated in Figure 2. Every Temporal-Cared Block comprises two sub-blocks with identical structures, a 1x1 input convolutional layer to extend the number of channels and a 1x1 input convolutional layer is utilized to expand the channel count, followed by a 1x1 output convolutional layer to restore the original number of channels. In each of the two identically structured sub-blocks within the Temporal-Cared Block, the initial step involves incorporating a Dilated Causal Convolutional (DC Conv) layer. This extended convolutional operation serves to broaden and enhance the receptive field, with the causal constraints guaranteeing that future information does not influence past data. Following the DC Conv layer, batch normalization, the ReLU activation function, and spatial dropout are sequentially applied.

$$g_i^{\rightarrow} = \mathcal{F}\left(\psi_i^{\rightarrow}\right) \tag{4}$$

$$g_i^{\leftarrow} = \mathcal{F}\left(\psi_i^{\leftarrow}\right) \tag{5}$$

In the above equation, $\mathcal{F}$ represents a Temporal-Cared Block, $g_i^{\rightarrow}$ and $g_i^{\leftarrow}$ represent the output.

We then use the fully connected layer to perform a dimensional transformation on $g_i^{\rightarrow}$, and matrix multiply it with the output of the BiGRU layer $\psi_i^{\rightarrow}$, with the inverse defined similarly.

$$h_i^{\rightarrow} = \psi_i^{\rightarrow} \otimes \left(W_{a'}^{\rightarrow} * g_i^{\rightarrow} + b_i^{'\rightarrow}\right) \tag{6}$$

$$h_i^{\leftarrow} = \psi_i^{\leftarrow} \otimes \left(W_{a'}^{\leftarrow} * g_i^{\leftarrow} + b_i^{'\leftarrow}\right) \tag{7}$$

Where $W_{a'}^{\rightarrow} \in \mathcal{R}^{d_a \times d_a}$, $b_i^{'\rightarrow} \in \mathcal{R}^{d_a}$, $W_{a'}^{\leftarrow} \in \mathcal{R}^{d_a \times d_a}$, $b_i^{'\leftarrow} \in \mathcal{R}^{d_a}$. Finally, To integrate the acquired audio representations into the embedding layer of the pre-trained language model, it is essential to align their dimensions with those of the pre-trained language model tokens.

$$\mathcal{X}_{a^{\rightarrow}} = \sigma\left(W_a^{\rightarrow} * h_i^{\rightarrow} + b_i^{\rightarrow}\right) \tag{8}$$

$$\mathcal{X}_{a^{\leftarrow}} = \sigma\left(W_a^{\leftarrow} * h_i^{\leftarrow} + b_i^{\leftarrow}\right) \tag{9}$$

Where $W_a^{\rightarrow} \in \mathcal{R}^{d_a \times d_a}$, $b_i^{\rightarrow} \in \mathcal{R}^{d_a}$, $W_a^{\leftarrow} \in \mathcal{R}^{d_a \times d_a}$, $b_i^{\leftarrow} \in \mathcal{R}^{d_a}$ is the weight and bias. σ is the activation function, $\mathcal{X}_{a^{\rightarrow}}, \mathcal{X}_{a^{\leftarrow}}$ is the

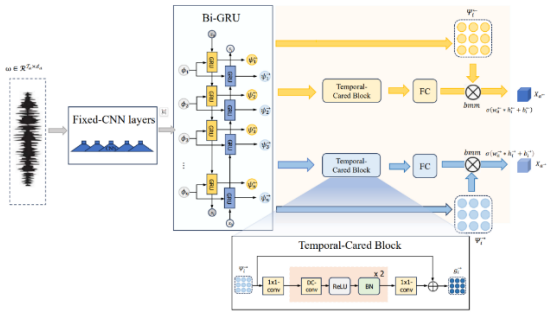

Figure 2: Dynamic Speech Timing Enhancement Module, consisting of a CNN block including fixed parameters, a Bi-GRU layer, and showing the implementation details of our designed Temporal-Cared Block. Note that the Temporal-Cared Block that handles forward and backward audio representations is the same structure, only the inputs are different.

final audio representation embedded into the pre-trained language model.

4 EXPERIMENTS

In this section, we will outline the experiments conducted and begin by elaborating on the dataset, followed by a description of the baseline and experimental setups.

4.1 Datasets

4.1.1 Librispeech. The LibriSpeech [18] dataset is an open dataset widely used in speech recognition and speech processing research. The dataset consists of about 1,000 hours of audio recordings of English readings covering a wide range of domains such as novels, technical manuals, news reports, etc. The LibriSpeech dataset provides the raw waveforms of the audio files as well as the corresponding text transcripts. LibriSpeech, being a crucial benchmark dataset in the audio domain, enables researchers to train and assess speech-related tasks effectively. It is extensively utilized in both academic and industrial research endeavors.

4.1.2 CMU-MOSI.. CMU-MOSI [19] dataset serves as a publicly accessible resource for multimodal sentiment analysis. This dataset encompasses movie clips sourced from YouTube, showcasing a diverse array of emotional expressions including happiness, sadness, anger, and more. Each video clip has a corresponding voice recording and text transcription. In addition, the dataset includes continuous sentiment labels manually labeled as $[-3, 3]$ (representing negative/positive emotional intensity) to facilitate training and evaluation of sentiment analysis tasks.

4.1.3 CMU-MOSEI.. CMU-MOSEI [20] has a larger data size and contains more samples than CMU-MOSEI. The CMU-MOSEI dataset contains large-scale movie clips from YouTube, totaling about one million samples. In the emotional intensity assessment task, akin to the CMU-MOSEI dataset, CMU-MOSEI provides continuous emotion labels ranging from -3 to 3.

4.2 Experiments Setup

Our methodology involves two phases: pre-training and fine-tuning. During the pre-training stage, our proposed framework is trained on the train-clean-100 subset of the LibriSpeech dataset. In this phase, we maintain the parameters of the coding layer while updating only the parameters of our proposed D-STEM and embedding layer. We implement a zero-shot learning strategy where the parameter adjustment of the D-STEM relies on the masked language modeling (MLM) task of the pre-trained model. This strategy is designed to enhance the training of the D-STEM by leveraging the MLM task of the pre-trained model and the cross-modal contrast loss, enabling the pre-trained language model to steer the parameter updates of the D-STEM and broaden its functionality into the multimodal domain.

During the fine-tuning phase, we unfroze the model to enable the trained D-STEM module to acquire phonological temporal affective representations, serving as cross-modal cues that assist in refining the pre-trained language model. Our experimentation involved three distinct BERT-style pre-trained language models—BERT, XLNet, and RoBERTa [21].For BERT and RoBERTa, we incorporated the learned phonological temporal representations as prefixes to text tokens. In the case of XLNet, due to its differences from BERT, we employed the phonological representations as suffixes. Additionally, we configured the learning rate to 2e-5, set the batch size to 16, and utilized the Adam optimizer along with the cross-entropy loss function to facilitate the training process..

4.3 Evaluation Metrics

Consistent with prior studies, we have utilized identical evaluation metrics across the MOSI and MOSEI datasets. These metrics encompass regression assessments based on the Mean Absolute Error (MAE) and Pearson Correlation (Corr). Furthermore, our benchmark encompasses classification metrics, such as the accuracy across seven levels (Acc7) ranging from -3 to 3, binary accuracy (Acc2), and the F1 Score.

5 RESULTS AND ANALYSIS

We showcase the outcomes of our proposed framework for sentiment analysis on the MOSI and MOSEI datasets. Additionally, we conduct a comparative analysis with baseline models that emphasize various aspects. We combine D-STEM with different types of pre-trained language models to form STIE-BERT, STIE-RoBERTa, and STIE-XLNet. In addition, we compare our models with SOTA models with different focuses, including multi-tasking-based Self-MM, modal-interaction-based MISA, and pre-trained language model-based of MAG-BERT. To maintain fairness, we used the results presented in the modeling paper. From Table 1 and Table 2, we have the following observations.

For the linguistic unimodal baseline model, RoBERTa outperforms BERT overall, while XLNet outperforms the former two. This may be due to the fact that RoBERTa is trained on a larger corpus dataset than BERT, which allows it to acquire richer prior knowledge. In addition, RoBERTa makes a series of improvements in training and design, which further improves the performance. In contrast, XLNet employs a bi-directional context modeling approach with an improved attention mechanism that allows it to

Table 1: MOSI sentiment prediction results.

Model	Modality	MAE^l	$Corr^h$	ACC_2^h	$F1^h$	ACC_7^h	Data State
BERT	T	0.731	0.831	83.60/85.37	84.80/86.12	42.17	N/A
RoBERTa	T	0.729	0.845	84.64/86.00	84.04/86.54	44.31	N/A
XLNet	T	0.723	0.864	84.52/86.30	86.74/88.30	44.89	N/A
TFN	T+A+V	0.970	0.633	73.90/-	73.40/-	32.10	Unaligned
LMF	T+A+V	0.912	0.668	76.40/-	75.70/-	32.80	Unaligned
RAVEN	T+A+V	0.915	0.691	78.00/-	76.60/-	33.20	Aligned
MulT	T+A+V	0.871	0.698	-/83.00	-/82.80	40.00	Unaligned
CM-BERT	T+A	0.729	0.791	-/84.50	-/84.50	44.90	Aligned
MISA	T+A+V	0.721	0.788	83.63/85.83	83.85/85.97	42.30	Unaligned
Self-MM	T+A+V	0.704	0.803	83.93/86.00	84.05/86.06	-	Unaligned
MAG-BERT	T+A+V	0.731	0.789	84.00/85.98	84.42/85.95	-	Unaligned
STIE-BERT	T+A	0.725	0.833	82.54/84.30	82.59/84.3	42.32	Unaligned
STIE-RoBERTa	T+A	0.685	0.847	85.82/86.02	85.28/86.64	43.00	Unaligned
STIE-XLNet	T+A	**0.673**	**0.868**	**84.56/86.40**	**86.81/88.47**	**44.93**	Unaligned

Table 2: MOSEI sentiment prediction results.

Model	Modality	MAE^l	$Corr^h$	ACC_2^h	$F1^h$	ACC_7^h	Data State
BERT	T	0.557	0.743	82.12/84.33	82.81/84.69	49.22	N/A
RoBERTa	T	0.569	0.750	83.93/84.49	83.77/85.35	52.15	N/A
XLNet	T	0.545	0.747	83.09/83.56	83.32/85.20	51.16	N/A
RAVEN	T+A+V	0.614	0.662	79.10/-	79.50/-	50.0	Aligned
MulT	T+A+V	0.580	0.703	-/82.50	82.30/-	51.8	Unaligned
MISA	T+A+V	0.555	0.756	83.60/85.50	83.80/85.30	52.20	Unaligned
Self-MM	T+A+V	0.530	0.765	82.81/85.17	82.53/85.30	-	Unaligned
MAG-BERT	T+A+V	0.539	0.753	83.79/85.23	83.74/85.08	-	Unaligned
STIE-BERT	T+A	0.532	0.743	83.21/83.40	83.17/83.39	49.28	Unaligned
STIE-RoBERTa	T+A	0.551	**0.751**	**83.95/85.61**	**83.79/85.37**	52.19	Unaligned
STIE-XLNet	T+A	**0.537**	0.750	83.88/85.66	84.34/85.32	**52.23**	Unaligned

better capture long range contextual dependencies, thus improving its performance on downstream tasks. Combining the pre-trained language model with the same configuration as above with our proposed D-STEM, the resulting model achieves significant improvements in all metrics compared to the text-only fine-tuning results.

Unimodal pretrained language models outperform modal interaction-based approaches, such as modal fusion-based baseline models like TFN and LMF. This finding emphasizes the significance of textual modality in multimodal sentiment analysis tasks and confirms the effectiveness of pretrained language models in learning representations. However, pre-trained language models do not perform as well as SOTA models such as MISA and Self-MM in MSA. This suggests that introducing nonverbal representations as complementary information to textual modalities and focusing on the variability of different modal data can help the models learn the sentiment information in the context more fully and thus make more accurate sentiment judgments.

MAG-BERT and CM-BERT demonstrate superior performance in multimodal sentiment analysis (MSA) compared to methods that rely solely on language models. This highlights the powerful representation learning capability of pre-trained language models and validates the effectiveness of incorporating non-verbal sentiment representations to enhance textual information. This approach shares similarities with MAG-BERT and CM-BERT in effectively integrating nonverbal sentiment representations with textual representations while preserving the structure of the original pretrained language model. This integration helps address the issue of performance imbalance between verbal and nonverbal data. Unlike MAG-BERT and CM-BERT, instead of explicitly aligning audio representations, our approach designs a module that can dynamically enhance the speech context representation from the original speech information and explicitly injects it into language models.

Our proposed framework draws on the strengths of the above approaches and further focuses on the impact of the phonological temporal properties of non-linguistic modalities on the extraction of affective representations. This not only enhances the overall expressiveness of pre-trained language models, but also highlights the necessity of focusing on the inherent properties of modality. At the same time, our approach also illustrates that enhancing the interaction of model contextual features during model design and

training plays a pivotal role in enhancing the overall performance of the model across downstream tasks.

6 CONCLUSION

This paper introduces a framework designed to integrate speech timing details into pre-trained language models, thereby enriching text representations with remote audio sentiment cues. By amalgamating the dynamic speech timing enhancement module with various pre-trained language models to create the proposed D-STEM, we enhance model performance while preserving the core attributes of the pre-trained language models. Extensive experiments demonstrate the superiority of our framework on the MOSI and MOSEI benchmark datasets. Future research endeavors will delve into contrastive learning to further investigate the interplay between linguistic and non-linguistic features in greater detail.

Acknowledgments

This work was supported by Natural Science Foundation of Liaoning Province under grant (2022JH2/101300075).

References

[1] Devamanyu Hazarika, Roger Zimmermann, and Soujanya Poria. 2020. Misa: Modality-invariant and-specific representations for multimodal sentiment analysis. In Proceedings of the 28th ACM international conference on multimedia. 1122–1131.

[2] Navonil Majumder, Devamanyu Hazarika, Alexander Gelbukh, Erik Cambria, and Soujanya Poria. 2018. Multimodal sentiment analysis using hierarchical fusion with context modeling. Knowledge-based systems 161 (2018), 124–133.

[3] Hu Xu, Bing Liu, Lei Shu, and Philip S Yu. 2020. Dombert: Domain-oriented language model for aspect-based sentiment analysis. arXiv preprint arXiv:2004.13816 (2020).

[4] Jiaxin Ye, Xin-Cheng Wen, Yujie Wei, Yong Xu, Kunhong Liu, and Hongming Shan. 2023. Temporal Modeling Matters: A Novel Temporal Emotional Modeling Approach for Speech Emotion Recognition. In ICASSP 2023-2023 IEEE International Conference on Acoustics, Speech and Signal Processing (ICASSP). IEEE, 1–5.

[5] Amir Zadeh, Minghai Chen, Soujanya Poria, Erik Cambria, and Louis-Philippe Morency. 2017. Tensor fusion network for multimodal sentiment analysis. arXiv preprint arXiv:1707.07250 (2017).

[6] Luwei Xiao, Xingjiao Wu, Shuwen Yang, Junjie Xu, Jie Zhou, and Liang He. 2023. Cross-modal fine-grained alignment and fusion network for multimodal aspect-based sentiment analysis. Information Processing & Management 60, 6 (2023), 103508.

[7] Wenmeng Yu, Hua Xu, Ziqi Yuan, and Jiele Wu. 2021. Learning modality-specific representations with self-supervised multi-task learning for multimodal sentiment analysis. In Proceedings of the AAAI conference on artificial intelligence, Vol. 35. 10790–10797.

[8] Sun Zhang, Chunyong Yin, and Zhichao Yin. 2022. Multimodal sentiment recognition with multi-task learning. IEEE Transactions on Emerging Topics in Computational Intelligence 7, 1 (2022), 200–209.

[9] Wasifur Rahman, Md Kamrul Hasan, Sangwu Lee, Amir Zadeh, Chengfeng Mao, Louis-Philippe Morency, and Ehsan Hoque. 2020. Integrating multimodal information in large pretrained transformers. In Proceedings of the conference. Association for Computational Linguistics. Meeting, Vol. 2020. NIH Public Access, 2359

[10] Zhilin Yang, Zihang Dai, Yiming Yang, Jaime Carbonell, Russ R Salakhutdinov, and Quoc V Le. 2019. Xlnet: Generalized autoregressive pretraining for language understanding. Advances in neural information processing systems 32 (2019).

[11] Yahui Chen. 2015. Convolutional neural network for sentence classification. Master's thesis. University of Waterloo.

[12] Srividya Tirunellai Rajamani, Kumar T Rajamani, Adria Mallol-Ragolta, Shuo Liu, and Björn Schuller. 2021. A novel attention-based gated recurrent unit and its efficacy in speech emotion recognition. In ICASSP 2021-2021 IEEE International Conference on Acoustics, Speech and Signal Processing (ICASSP). IEEE, 6294–6298.

[13] Jianyou Wang, Michael Xue, Ryan Culhane, Enmao Diao, Jie Ding, and Vahid Tarokh. 2020. Speech emotion recognition with dual-sequence LSTM architecture. In ICASSP 2020-2020 IEEE International Conference on Acoustics, Speech and Signal Processing (ICASSP). IEEE, 6474–6478.

[14] Qiquan Zhang, Qi Song, Aaron Nicolson, Tian Lan, and Haizhou Li. 2021. Temporal convolutional network with frequency dimension adaptive attention for speech enhancement. Proc. Interspeech 2021 (2021), 166–170.

[15] Ashutosh Pandey and DeLiang Wang. 2019. TCNN: Temporal convolutional neural network for real-time speech enhancement in the time domain. In ICASSP 2019-2019 IEEE International Conference on Acoustics, Speech and Signal Processing (ICASSP). IEEE, 6875–6879.

[16] Alexei Baevski, Yuhao Zhou, Abdelrahman Mohamed, and Michael Auli. 2020. wav2vec 2.0: A framework for self-supervised learning of speech representations. Advances in neural information processing systems 33 (2020), 12449–12460.

[17] Kyunghyun Cho, Bart Van Merriënboer, Caglar Gulcehre, Dzmitry Bahdanau, Fethi Bougares, Holger Schwenk, and Yoshua Bengio. 2014. Learning phrase representations using RNN encoder-decoder for statistical machine translation. arXiv preprint arXiv:1406.1078 (2014).

[18] Vassil Panayotov, Guoguo Chen, Daniel Povey, and Sanjeev Khudanpur. 2015. Librispeech: an asr corpus based on public domain audio books. In 2015 IEEE international conference on acoustics, speech and signal processing (ICASSP). IEEE, 5206–5210.

[19] Amir Zadeh, Rowan Zellers, Eli Pincus, and Louis-Philippe Morency. 2016. Mosi: multimodal corpus of sentiment intensity and subjectivity analysis in online opinion videos. arXiv preprint arXiv:1606.06259 (2016)

[20] AmirAli Bagher Zadeh, Paul Pu Liang, Soujanya Poria, Erik Cambria, and Louis-Philippe Morency. 2018. Multimodal language analysis in the wild: Cmu-mosei dataset and interpretable dynamic fusion graph. In Proceedings of the 56th Annual Meeting of the Association for Computational Linguistics (Volume 1: Long Papers). 2236–2246.

[21] Yinhan Liu, Myle Ott, Naman Goyal, Jingfei Du, Mandar Joshi, Danqi Chen, Omer Levy, Mike Lewis, Luke Zettlemoyer, and Veselin Stoyanov. 2019. Roberta: A robustly optimized bert pretraining approach. arXiv preprint arXiv:1907.11692 (2019).