The Evolution and Breakthrough of Natural Language Processing: The Revolution from Rules to Deep Learning

Chen Feng*
Shandong University of Science and Technology
Taian, Shandong, China
hiawa2077@gmail.com

Yifan Li
Shandong University of Science and Technology
Taian, Shandong, China
yifanl430@gmail.com

Zhaoda Chen
Shandong University of Science and Technology
Taian, Shandong, China
1143848996@qq.com

Longxing Guo
Shandong University of Science and Technology
Taian, Shandong, China
3070172075@qq.com

Abstract

Natural language processing (NLP) is the intersection of computer science and artificial intelligence. It aims to enable computers to understand and generate human natural language. With the development of the Internet and big data, natural language processing has become one of the most popular areas in the AI era. Currently, the rise of large-scale pre-trained language models has greatly promoted progress in this field, making the application of natural language processing more extensive and in-depth. This article first reviews the development history of natural language processing, from early rule-based systems to current deep learning-based models. In particular, the proposal of the Transformer architecture marks a major breakthrough in natural language processing technology. It greatly improves the ability to handle long-distance dependencies through the attention mechanism, and has become the basic model for many NLP tasks. Further, this article explores the significant improvements in performance of large-scale pre-trained models such as GPT and BERT, and how they understand and generate language by learning the subtle laws of language on large amounts of text data. Finally, the perspective is returned to large language models, including the development history, performance and challenges of large models, and the introduction of meditation is proposed to solve the problem of model illusion.

CCS Concepts

• **Computing methodologies** → Artificial intelligence; Natural language processing.

Keywords

Natural language processing, Machine learning, Neural networks, Large language models

*Corresponding author.

Permission to make digital or hard copies of all or part of this work for personal or classroom use is granted without fee provided that copies are not made or distributed for profit or commercial advantage and that copies bear this notice and the full citation on the first page. Copyrights for components of this work owned by others than the author(s) must be honored. Abstracting with credit is permitted. To copy otherwise, or republish, to post on servers or to redistribute to lists, requires prior specific permission and/or a fee. Request permissions from permissions@acm.org.
ICCSMT 2024, October 18–20, 2024, Xiamen, China
© 2024 Copyright held by the owner/author(s). Publication rights licensed to ACM.
ACM ISBN 979-8-4007-0999-9/24/10
https://doi.org/10.1145/3708036.3708089

ACM Reference Format:
Chen Feng, Yifan Li, Zhaoda Chen, and Longxing Guo. 2024. The Evolution and Breakthrough of Natural Language Processing: The Revolution from Rules to Deep Learning. In *2024 5th International Conference on Computer Science and Management Technology (ICCSMT 2024), October 18–20, 2024, Xiamen, China.* ACM, New York, NY, USA, 5 pages. https://doi.org/10.1145/3708036.3708089

1 Introduction

Natural language processing is an important research direction in the fields of computer science and artificial intelligence, which aims to use natural language to realize various theories and methods of human-computer interaction. Thanks to the development of deep learning and the explosive growth of massive data, the field of NLP has ushered in a leap-forward and rapid development. NLP technology is widely used in text classification, machine translation, speech recognition, automatic summarization, question-answering systems, language models and other fields. In addition, with the emergence of excellent open source deep learning frameworks such as Pytorch and TensorFlow, researchers and developers can quickly and conveniently build and deploy NLP algorithm models.

NLP is closely related to linguistics, but in the early days, scientists were limited to this view and took more than 20 years to go the wrong way. NLP can be divided into two parts: natural language understanding and natural language generation, which correspond to understanding text and generating text respectively. The main goal of NLP is to enable computers to understand and use natural language, thereby providing users with a better interactive experience and a more efficient way of working. This is people's understanding and summary of natural language processing technology after a tortuous development. This article will introduce the development of natural language processing in detail in the second part.

The emergence of large language models not only marks a major leap forward in natural language processing technology, but also heralds a move towards higher levels of cognitive capabilities in the field of artificial intelligence. Such models, such as GPT-4, BERT, and Claude, usually contain tens of billions of parameters or more, enabling them to be pre-trained on large text corpora to learn the deep structure and complex laws of language. Through this end-to-end training method, large language models can automatically capture and learn semantic and grammatical information in

text without manually designed features.The development of large language models can be divided into four main stages. Initially, these models have not attracted widespread attention in academia, but with the improvement of computing power and the increase in data volume, their potential has gradually been recognized. In the second stage, with the breakthrough of deep learning technology and the introduction of the Transformer architecture, large language models began to develop rapidly and became a hot topic of research. In the third stage, the application scope of the model expanded from academic research to commercial applications, such as automatic text generation, machine translation, content recommendation and other scenarios. In the fourth stage, people began to pay attention to the sustainability, credibility and security issues of the model.Although large language models have brought significant technological progress and application value, they also face a series of challenges. The first is the credibility issue. Large language models may generate misleading or inaccurate content without sufficient supervision. In addition, security issues cannot be ignored. Models can easily be used to generate false information or abuse, which has a negative impact on society and individuals. Therefore, researchers and developers are exploring how to introduce more regulatory mechanisms and ethical guidance to ensure that these powerful technologies can be used safely and responsibly.

2 Natural Language Processing Applications

So far, the development history of natural language processing can be roughly divided into four stages [1]. The first stage (1950-1969): based on language and rules. Natural language processing began to be applied to machine translation, but at that time people knew nothing about the relationship and structure between natural language and machine learning. It was also a stage where scientists took detours. Scientists around the world's understanding of computer processing of natural language was limited to the way humans learn language, that is, using computers to simulate the human brain ("bird flying school"), so the results of more than 20 years were almost zero [2]. Until the second stage (1970-1992): the era of traditional machine learning. The pioneers of natural language processing began to re-examine this issue, using methods based on mathematical models and statistics. Over the past few decades, this field has made substantial breakthroughs, and a series of NLP systems have begun to develop. These systems included SHRDLU by Terry Winograd, LUNAR by Bill Woods, Roger Schank's systems such as SAM, Gary Hendrix's LIFER, and GUS by Danny Bobrow [3]. And they showed complexity and depth in processing tasks such as grammar and references in human language. Figure 1, It is worth noting that the birth of these systems is not due to computers understanding natural language, but relying on statistics.

In the third stage (1993-2012): the era of deep learning. As text data became increasingly abundant, algorithm research began to be taken seriously, and the focus of NLP research was repositioned. Using algorithms to process large amounts of language text to understand natural language was the main theme of this period, which continues to this day. After a long and tortuous development, the NLP field has entered the fourth stage (2013-present), the era of large language models. With the advent of deep learning and neural networks, NLP work has undergone earth-shaking changes.

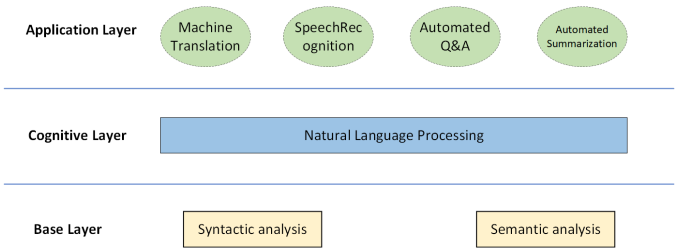

Figure 1: Early understanding of natural language.

Deep learning provides a new model construction method and can map words and sentences to vector space to explicitly view their similarities. In 2018, with the debut of GPT-1 [4] and BERT [5], the era of large language models officially arrived. In 2017, Vaswani et al. proposed the Transformer model, which abandoned the traditional recurrent neural network and convolutional neural network structures and was completely based on the self-attention mechanism. It is worth mentioning that to this day, all large language models, including the GPT series and BERT, are implemented using the Transformer [6] model. The number of learnable parameters of the GPT-1 model is 330 million, while the number of learnable parameters of the GPT-4 [7] model has reached 1.8 trillion, but the expensive training costs have formed a huge barrier.

2.1 Key Technologies And Algorithms

In the era of traditional machine learning, people focused on feature engineering and model selection, and mainly pursued the search for better algorithms, such as regression, SVM, decision trees, etc. They are still in use now, but no longer attract much attention; in the era of deep learning, people no longer seek perfect algorithms, but pay more attention to the fit between data and models, with data as the soul. At the same time, many excellent deep learning algorithms have been proposed, such as RNN, LSTM [8], GRU and Transformer. At this stage, Word2vec [9] was proposed by Mikolov et al. It uses the word embedding method to transform real-world problems into mathematical problems, solving a key step in solving artificial intelligence problems. Word2vec has two important models, CBOW and Skip-Gram, which use almost opposite prediction methods to calculate probabilities.

In the era of large language models, Bahdanau (2014) et al. proposed the attention mechanism [10], which was applied to perfection in Transformer and achieved different results. Later, Transformer was widely used in various large language models and became popular, such as OPEN AI's GPT series, Google's BERT [5], and Baidu's Ernie [11].

Transformer is a revolutionary neural network architecture that is mainly used to process sequence data, Figure 2, especially in the field of natural language processing. At present, Transformer-like large models have made great achievements in natural language processing tasks, and some tasks have surpassed the human level. Transformer adopts an Encoder-Decoder structure, each of which contains 6 blocks. It also proposes and introduces the self-attention mechanism and position encoding for the first time. The former allows the model to consider all position information in parallel when processing sequence data, rather than sequentially, and also enables

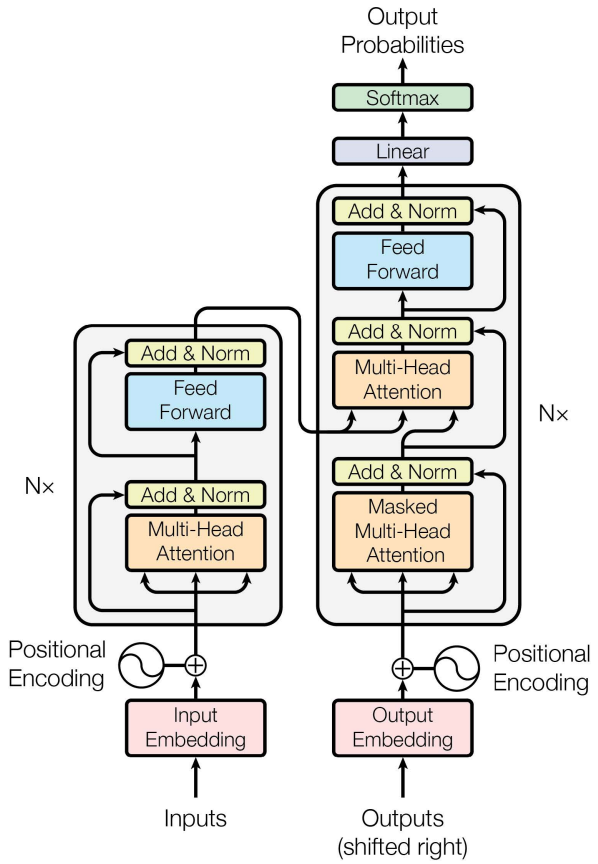

Figure 2: The Transformer model architecture.

the model to capture the complex relationship between different parts of the input sequence; the latter allows the model to use global information. It is worth mentioning that the Transformer is the first transduction model relying entirely on self-attention to compute representations of its input and output without using sequence aligned RNNs or convolution [6]. At present, Transformer has begun to be applied to other deep learning fields, such as computer vision and multimodal fields [12]. It is undeniable that Transformer is indeed a very excellent model, flexible and scalable, but I believe this is far from the ultimate mystery of deep learning models.

2.2 Large Scale Language Models

In recent years, the rapid development of large language models has brought about revolutionary changes in the field of natural language processing. Language models are one of the main ways to improve machine language intelligence, and their birth provides a new methodology for natural language processing. In fact, generative language models were proposed as early as the mid-20th century. With the improvement of computing power, a significant leap in model parameters has become possible, so people have begun to pay attention to them.

The evolution of language model technology is a fascinating journey in the field of artificial intelligence. Figure 3, It can be

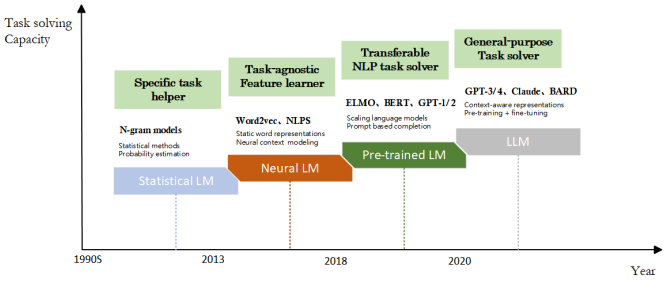

Figure 3: An evolution process of the four generations of language models (LM) from the perspective of task solving capacity.

divided into four stages, each of which represents a leap in technological innovation and capability improvement. In the initial stage, rule-based and statistical language models [13] dominated early explorations, especially the N-gram model, which processed and analyzed text data through artificially designed features and complex statistical methods. Although this method achieved certain success in the early stage, it was unable to cope with large-scale data and complex semantics. Entering the second stage, with the increase in computing power and the explosion of data volume, neural networks began to play an important role in language models. During this period, models such as Word2vec and EloMo [14] not only improved the semantic representation of vocabulary, but also greatly promoted the development of contextual understanding capabilities.The arrival of the third stage marked a major turning point. The introduction of the Transformer architecture was not only a technological breakthrough, but also a milestone in the development of large-scale language models. This model based on the self-attention mechanism greatly improved the model's ability to handle long-distance dependencies and laid the foundation for the subsequent development of models such as BERT and GPT [15]. These models can capture the nuances and complex semantic structures of language by learning on a wide range of pre-training data, thus achieving unprecedented performance on specific tasks with simple fine-tuning.Now, with the establishment of the pre-training plus fine-tuning model, the application of language models has far exceeded the traditional field of text processing and expanded to multiple directions such as machine translation, sentiment analysis, automatic summarization and dialogue systems, greatly improving the versatility and adaptability of the model, and also promoting the application of artificial intelligence technology in a wider range of fields, opening a new golden age of natural language processing technology.

Why are large language models so popular? Figure 4, Because of their unparalleled performance, and their high performance comes from the number of parameters that can be learned. Research shows that there may be a scaling law, that is, as the parameters of the pre-selected training model grow exponentially, the performance of its language model will also increase linearly. From GPT-1's 330 million learnable parameters to GPT-4's 1.8 trillion learnable parameters, from the former's simple text generation to the latter's multimodal information processing and excellent logical reasoning

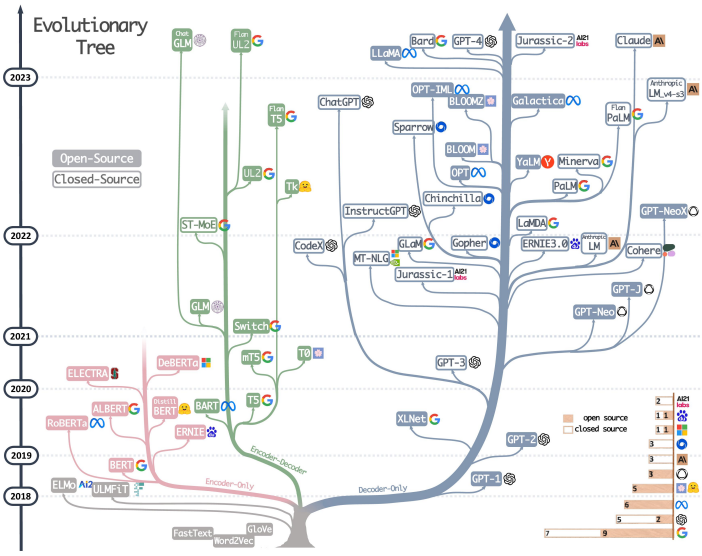

Figure 4: Modern LLM evolutionary tree, listing some of the most famous models. Models in the same branch are more closely related, and transformer-based models are shown in non-grey. Blue, pink, and green branches represent decoder-only, encoder-only, and encoder-decoder models, respectively.

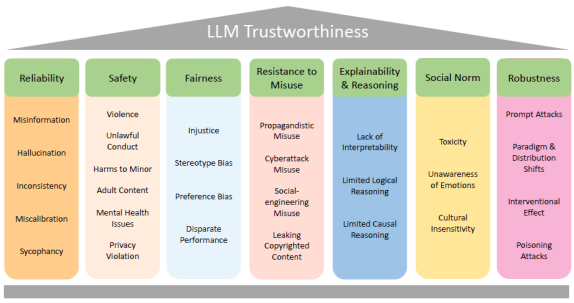

Figure 5: A taxonomy of key dimensions and their subcategories to consider when assessing the credibility of LLMs.

capabilities. The linear increase in the number of parameters leads to an exponential increase in performance. Later, Wei et al. called this phenomenon capability emergence [16].

Large Language Models (LLMs) went from non-existent to ubiquitous in the machine learning discourse within a few years. Due to the fast pace of the field, it is difficult to identify the remaining challenges and already fruitful application areas [17]. At present, the field of large language models faces two urgent problems to be solved, namely credibility and security. First, model credibility is the most important indicator for evaluating large language models, especially in fields such as real finance and health that require high accuracy, which directly affects the vital interests of individuals and society. Yang et al. (2023) proposed a classification method for seven key dimensions and their subcategories that need to be considered when evaluating the credibility of LLMs. Figure 5, The seven main categories are reliability, security, fairness, anti-misuse, interpretability and reasoning, compliance with social norms, and robustness, and each major category contains several subcategories, totaling 29 subcategories [18]. Hallucination is one of the main reasons for low model credibility. To reduce or eliminate model hallucinations, we must start from the three aspects of data set, training and reasoning [19]. Perhaps, we can let the model meditate and solve the hallucination phenomenon through self-reflection-improvement self-feedback mechanism. In terms of model security, although LLM has achieved remarkable success, they may sometimes violate human values and preferences, leak personal privacy, generate toxic or even illegal content, and have a negative impact on society [20]. The research team of Ethan et al. (2022) is trying to use artificial adversarial methods to improve the security of model answers [21]. How to prevent large models from outputting answers that are personal privacy or contrary to social morality still needs attention.

3 Conclusion

In recent years, the field of NLP has made significant developments and breakthroughs, bringing many innovations and advances in

language processing and understanding amid changes in model paradigms. End-to-end deep learning methods have begun to replace traditional statistical models, solving the contradiction of requiring a large amount of feature engineering and domain expert knowledge; the Transformer architecture abandons recursion and relies entirely on the attention mechanism to draw the global dependencies between input and output. , can better handle long-distance dependencies and model global relationships, solving the problem that models such as RNN cannot handle long sequences of text; a series of large models such as Transformer-based GPT and BERT have emerged with excellent (beyond human level) capabilities , is profoundly reshaping the field of natural language processing; however, the credibility and security of large models are still issues that need to be solved urgently. Meditation (self-feedback mechanism) is performed on the model to reduce or eliminate the phenomenon of model illusion.

In the future, large models will still be the focus of research in the field of deep learning. However, the improvement of model performance cannot simply rely on the simple superposition of model layers and the increase in the number of parameters. Instead, new approaches are needed. In addition, high-quality and fair data sets are also indispensable. Few cornerstones. The emergence of Transformer has completely changed the landscape of the NLP field and even the field of deep learning, and is considered the cornerstone of modern large language models. But I believe that the Transformer architecture is not a silver bullet for neural network models. In the future, more excellent models will surely be proposed, such as Mamba [22], and more intelligent and humanized natural language systems will surely emerge, making more contributions to human life and social development.

References

[1] Manning, Christopher D. "Human language understanding & reasoning." Daedalus 151.2, 2022, 127-138.

[2] Wu, Jun, The beauty of mathematics. Published by the People's Posts and Telecommunications Press, 2020. Accessed 2024/6/27.

[3] A survey of these systems and references to individual systems appears in Avron Barr, "Natural Language Understanding," AI Magazine, Fall 1980.

[4] Radford, Alec, *et al.* "Improving language understanding by generative pre-training." 2018.

[5] Devlin, Jacob, *et al.* "Bert: Pre-training of deep bidirectional transformers for language understanding." arxiv preprint arxiv:1810.04805, 2018.

[6] Vaswani, Ashish, *et al.* "Attention is all you need." Advances in neural information processing systems 30, 2017.

[7] Achiam, Josh, *et al.* "Gpt-4 technical report." arxiv preprint arxiv:2303.08774, 2023.

[8] Cheng, Jianpeng, Li Dong, and Mirella Lapata. "Long short-term memory-networks for machine reading." arxiv preprint arxiv:1601.06733, 2016.

[9] Mikolov, Tomas, *et al.* "Efficient estimation of word representations in vector space." arxiv preprint arxiv:1301.3781, 2013.

[10] Bahdanau, Dzmitry, Kyunghyun Cho, and Yoshua Bengio. "Neural machine translation by jointly learning to align and translate." arxiv preprint arxiv:1409.0473, 2014.

[11] Sun, Yu, *et al.* "Ernie: Enhanced representation through knowledge integration." arxiv preprint arxiv:1904.09223, 2019.

[12] Han, Kai, *et al.* "A survey on vision transformer." IEEE transactions on pattern analysis and machine intelligence 45.1, 2022, 87-110.

[13] Zhao, Wayne **n, *et al.* "A survey of large language models." arxiv preprint arxiv:2303.18223, 2023.

[14] Sarzynska-Wawer, Justyna, *et al.* "Detecting formal thought disorder by deep contextualized word representations." Psychiatry Research 304, 2021, 114135.

[15] Yang, **gfeng, *et al.* "Harnessing the power of llms in practice: A survey on chatgpt and beyond." ACM Transactions on Knowledge Discovery from Data 18.6, 2024, 1-32.

[16] Wei, Jason, *et al.* "Emergent abilities of large language models." arxiv preprint arxiv:2206.07682, 2022.

[17] Kaddour, Jean, *et al.* "Challenges and applications of large language models." arxiv preprint arxiv:2307.10169, 2023.

[18] Liu, Yang, *et al.* "Trustworthy LLMs: A survey and guideline for evaluating large language models' alignment." arxiv preprint arxiv:2308.05374, 2023.

[19] Huang, Lei, *et al.* "A survey on hallucination in large language models: Principles, taxonomy, challenges, and open questions." arxiv preprint arxiv:2311.05232, 2023.

[20] Cui, Tianyu, *et al.* "Risk taxonomy, mitigation, and assessment benchmarks of large language model systems." arxiv preprint arxiv:2401.05778, 2024.

[21] Perez, Ethan, *et al.* "Red teaming language models with language models." arxiv preprint arxiv:2202.03286, 2022.

[22] Gu, Albert, and Tri Dao. "Mamba: Linear-time sequence modeling with selective state spaces." arxiv preprint arxiv:2312.00752, 2023.