PLL

Process: UMC 40LP

Version: 1.0

October 2024

© 2007-2024 INNOSILICON All rights reserved.

Copyright Notice and Statement

This documentation contains confidential and proprietary information that is the property of INNOSILICON MICROELECTRONICS (ZHUHAI) CO. LTD ("Innosilicon"). The documentation is furnished under a license agreement and may be used or copied only in accordance with the terms of the license agreement. No part of documentation may be reproduced, transmitted, or translated, in any form or by any means, electronic, mechanical, manual, optical, or otherwise, without prior written permission of Innosilicon, or as expressly provided by the license agreement.

Disclaimer Statement

INNOSILICON hereby provides the quality information to you but makes no claims promises or guarantees about the accuracy, completeness, or adequacy of the information herein. The information contained herein is provided on an "AS IS" basis without any warranty, and INNOSILICON assumes no obligation to provide support of any kind or otherwise maintain the information. INNOSILICON disclaims any representation that the information does not infringe any intellectual property rights or proprietary rights of any third Parties. INNOSILICON makes no other warranty, whether express, implied or statutory as to any matter whatsoever, including but not limited to the accuracy or sufficiency of any information or the merchantability and fitness for a particular purpose. Neither INNOSILICON nor any of its representatives shall be liable for any cause of action incurred to connect to this service.

Use and Confidentiality Statement

The following/attached material contains confidential and proprietary information of INNOSILICON. This material is based upon information which INNOSILICON considers reliable, but INNOSILICON neither represents nor warrants that such information is accurate or complete, and it must not be relied upon as such. This information was prepared for informational purposes and is for the use by INNOSILICON's customer only. INNOSILICON reserves the right to make changes in the information at any time without notice. No part of this information may be reproduced, transmitted, transcribed, stored in a retrieval system, or translated into any human or computer language, in any form or by any means, electronic, mechanical, magnetic, optical, chemical, manual, or otherwise, without the prior written consent of INNOSILICON. Any unauthorized use or disclosure of this material is strictly prohibited and may be unlawful. By accepting this material, the receiving party shall be deemed to have acknowledged, accepted, and agreed to be bound by the foregoing limitations and restrictions. Thank you.

INNOSILICON TO PR3240CCH CONFIDENTIAL

CONTACT INNOSILICON

Address: Hengqin International Business Center, 3000#, Huandao East Road, Hengqin New District, Zhuhai, GD, China

Email: design@innosilicon.com

Website: http://www.innosilicon.com

Revision History

Version	Date	Description
1.0	October 2024	Initial Release

INNOSILICON TO PRJ2410CCI1 CONFIDENTIAL

© 2007-2024 INNOSILICON All rights reserved.

Table of Contents

1 Introduction 1

2 Features 2

3 Pin Information 3

4 PLL Details 5

4.1 Maximum Operation Conditions 5
4.2 PLL Specifications 6

5 PLL Configuration 7

5.1 Integer Mode 7
5.2 Fraction Mode 8
5.3 STARTING THE PLL 9
5.4 TEST MODE 9

List of Figures

Figure 1 PLL Basic Structure Diagram 1

List of Tables

Table 1 Pin Information 3
Table 2 PLL Maximum Operation Conditions 5
Table 3 PLL Specifications 6
Table 4 Register Value of Integer Mode 7
Table 5 Register Value of Fraction Mode 8

INNOSILICON TO PRJ2410CCI1 CONFIDENTIAL

© 2007-2024 INNOSILICON All rights reserved.

1

Introduction

The INNOSILICON high performance PLL is a high speed, low jitter frequency synthesizer and developed as an IP block to reduce time to market, risk and cost in the development of Analog Front-End design. It can generate stable high-speed clock from an ultra-wide input clock. With excellent supply noise immunity, the PLL is ideal for using in noisy mixed signal SOC environments. This PLL integrates a Phase Frequency Detector (PFD), a Low Pass Filter (LPF), a Voltage Controlled Oscillator and other associated circuit. All fundamental building blocks as well as fully programmable dividers are integrated in the core.

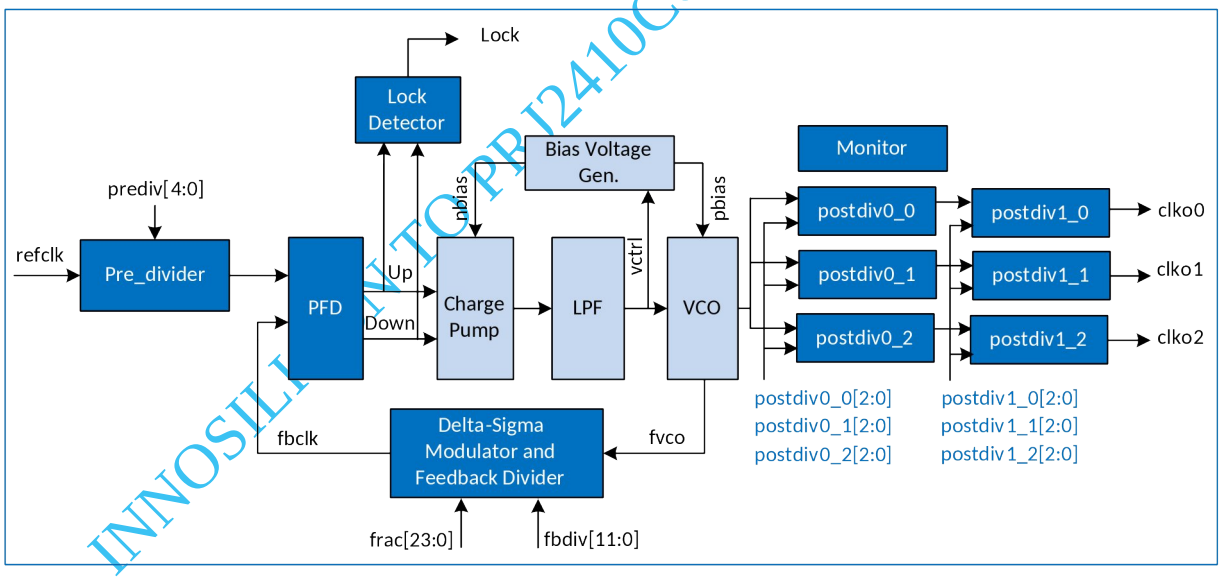

Figure 1 PLL Basic Structure Diagram

INNOSILICON TO PRI2410CC11 CONFIDENTIAL

© 2007-2024 INNOSILICON All rights reserved.

2

Features

The PLL supports the following features:

- Technology: UMC40LP 1P8M
- Dual power supply: 3.3V (analog) /1.1V(digital) allows for excellent supply noise rejection
- Reference clock frequency range from 10MHz to 500MHz
- PFD frequency range 10MHz to 100MHz
- VCO frequency range from 1GHz to 3GHz
- Low jitter
- Lock detector to indicate frequency locked state

INNOSILICON TO PRJ2410CCI1 CONFIDENTIAL

© 2007-2024 INNOSILICON All rights reserved.

3

Pin Information

INNOSILICON TO ERP2410CC1 CONFIDENTIAL

Table 1 Pin Information

Name	I/O	Description
vcca	P	Analog VCC for PLL
vccdcore	P	Digital VCC for PLL Digital Core
vccdpost	P	Digital VCC for PLL Post Divider
vssa	G	Ground for PLL
refclk	C	Input reference clock
pd	I	PLL power down pin, “1” is available
fbdiv[11:0]	I	Integer feedback divider 12-bit control pins, divider value 8, 9, 10, 12, 13~4095, alias NI
frac[23:0]	I	Fractional feedback divider 24-bit control pins, alias NF
prediv[4:0]	I	Pre-divider 5-bit control pin, divider value 1~31, alias M
postdiv0_0[2:0]	I	Post-divider, 3-bit control pin, divider value 1~8, alias Q0_0 (3’b000, divider=1;3’b111, divider=8)
postdiv1_0[2:0]	I	Post-divider, 3-bit control pin, divider value 1~8, alias Q1_0 (3’b000, divider=1;3’b111, divider=8)
postdiv0_1[2:0]	I	Post-divider, 3-bit control pin, divider value 1~8, alias Q0_1 (3’b000, divider=1;3’b111, divider=8)
postdiv1_1[2:0]	I	Post-divider, 3-bit control pin, divider value 1~8, alias Q1_1 (3’b000, divider=1;3’b111, divider=8)
postdiv0_2[2:0]	I	Post-divider, 3-bit control pin, divider value 1~8, alias Q0_2 (3’b000, divider=1;3’b111, divider=8)
postdiv1_2[2:0]	I	Post-divider, 3-bit control pin, divider value 1~8, alias Q1_2 (3’b000, divider=1;3’b111, divider=8)
dacpd	I	DAC module (noise cancellation) power down, “1” is available
dsmpd	I	Delta-sigma module power down, “1” is available
cpi_bias[2:0]	I	PLL loop parameter control pin, default value: 3’b011

© 2007-2024 INNOSILICON All rights reserved.

Name	I/O	Description
cpp_bias[2:0]	I	PLL loop parameter control pin, default value: 3’b010
gvco_bias[1:0]	I	PLL loop parameter control pin, default value: 2’b01
lock	O	Lock state index, “1” is for locked state
clko0	O	PLL output clock
clko1	O	PLL output clock
clko2	O	PLL output clock
testout	O	Monitor output
testen	I	Monitor enable, “1” is available and for test function. It should be set to 0 in normal operation
testsel[1:0]	I	00 is to observe lock, 01 is to observe prediv output clock, 10 is to observe fbdiv output clock, 11 is reserved

INNOSILICON TO PRJ2410CCI1 CONFIDENTIAL

© 2007-2024 INNOSILICON All rights reserved.

4

PLL Details

4.1 Maximum Operation Conditions

Table 2 PLL Maximum Operation Conditions

Parameter	Condition	Min	Typ	Max
vcca	Analog supply voltage	2.97V	3.3V	3.63V
vccdcore	Core supply voltage	0.99V	1.1V	1.21V
vccdpost	Postdiv supply voltage	0.99V	1.1V	1.21V
Tj	Junction temperature	-40℃	27℃	125℃

INNOSILICON TO PRJ2410CH1 CONFIDENTIAL

© 2007-2024 INNOSILICON All rights reserved.

4.2 PLL Specifications

Table 3 PLL Specifications

Parameter	Min	Typ	Max	Unit	Comment
vcca Current Consumption	-	-	4.5	mA	Fvco=3 GHz, TT corner
vccd Current Consumption (vccdcore+vccdpost)	-	-	4.5	mA	Fvco=3GHz, TT corner
Power Down Leakage	-	10	-	uA	Temp.= 27ºC
Reference Clock Frequency	10	-	500	MHz	-
VCO Frequency	1	-	3	GHz	-
Output Clock Duty Cycle	45	50	55	%	Output clocks from post-divider
Lock Time	-	-	500	reference clock cycle	-
Long Term Jitter (int mode)	-	-	3.5	ps (RMS)	random jitter
Long Term Jitter (frac mode)	-	-	7	ps (RMS)	random jitter
Period Jitter	-	-	+/-2%	output clock period	p-p jitter
Cycle-to-Cycle Jitter	-	-	+/-3%	output clock period	p-p jitter
Area	-	0.081	-	mm^2	270um*300um

INNOSILICON TO PRJ2410CCIT CONFIDENTIAL

© 2007-2024 INNOSILICON All rights reserved.

5

PLL Configuration

5.1 Integer Mode

If you want PLL to work in integer mode, set register values as shown in Table 4.

Table 4 Register Value of Integer Mode

Register	Value
dacpd	1’b1
dsmpd	1’b1

The frequency of outputs can be figured out as below.

$$Fvco = Fref \times NI \div M$$

NI is integer frequency dividing ratio of feedback divider, set by fbdiv[11:0] , NI = 20….4095

M is frequency dividing ratio of pre-divider, set by prediv[4:0],M = 1, 2 … 31.

$$Fclko0 = Fvco \div Q0_0 \div Q1_0$$

Q0_0 is frequency dividing ratio of postdiv0_0, set by postdiv0_0[2:0], Q0_0= 1, 2 …, 8;

Q1_0 is frequency dividing ratio of postdiv1_0, set by postdiv1_0[2:0], Q1_0= 1, 2 …, 8;

Calculation method of Fclko1 and Fclko2 is same as Fclko0.

INNOSILICON TO PRJ2410CCI CONFIDENTIAL

© 2007-2024 INNOSILICON All rights reserved.

5.2 Fraction Mode

If you want PLL to work in fraction mode, set register values as shown in Table 5.

Table 5 Register Value of Fraction Mode

Register	Value
dacpd	1’b0
dsmpd	1’b0

The frequency of outputs can be figured out as below.

$$Fvco = Fref \times (NI+NF) \div M$$

NI is integer frequency dividing ratio of feedback divider, set by fbdiv[11:0], NI = 20 … 4095.

NF is fractional frequency dividing ratio, set by frac[23:0]. NF =frac[23:0]/2^24= 0~0.99999994.

M is frequency dividing ratio of pre-divider, set by prediv[4:0], M = 1, 2 … 31.

$$Fclko0 = Fvco \div Q0_0 \div Q1_0$$

Q0_0 is frequency dividing ratio of postdiv0_0, set by postdiv0_0[2:0], Q0_0= 1, 2 …,8;

Q1_0 is frequency dividing ratio of postdiv1_0, set by postdiv1_0[2:0], Q1_0= 1, 2 …,8;

Calculation method of Fclko1 and Fclko2 is same as Fclko0.

INNOSILICON TO PRJ2410CCIT CONFIDENTIAL

© 2007-2024 INNOSILICON All rights reserved.

5.3 STARTING THE PLL

The PLL is designed to be self-healing and should return to normal operation from any state. However, in order to assure consistent and deterministic power up operation it is recommended that the following initiation sequence be followed:

1. Power on PLL;
2. Enable reference clock;
3. Assert pd=1;
4. Set divider control bits;
5. Release pd, pd=0 after no less than 1μs.

5.4 TEST MODE

Pin testout used to observe PLL internal critical signals in debug mode. It should be sent to system observe port or digital standard IO. In normal operation mode, user should shut down the internal monitor using testen=0 to reduce power dissipation and noise. Monitor output configuration is as follows,

testsel[1:0]	testout
00	lock, lock detector output, 1 indicate lock state
01	refclko, clock output from pre-divider
10	fbclko, clock output from feedback divider
11	reserved

Table 4 PLL Test Mode Configuration

INNOSILICON TO PRJ2410CCI1 CONFIDENTIAL

© 2007-2024 INNOSILICON All rights reserved.