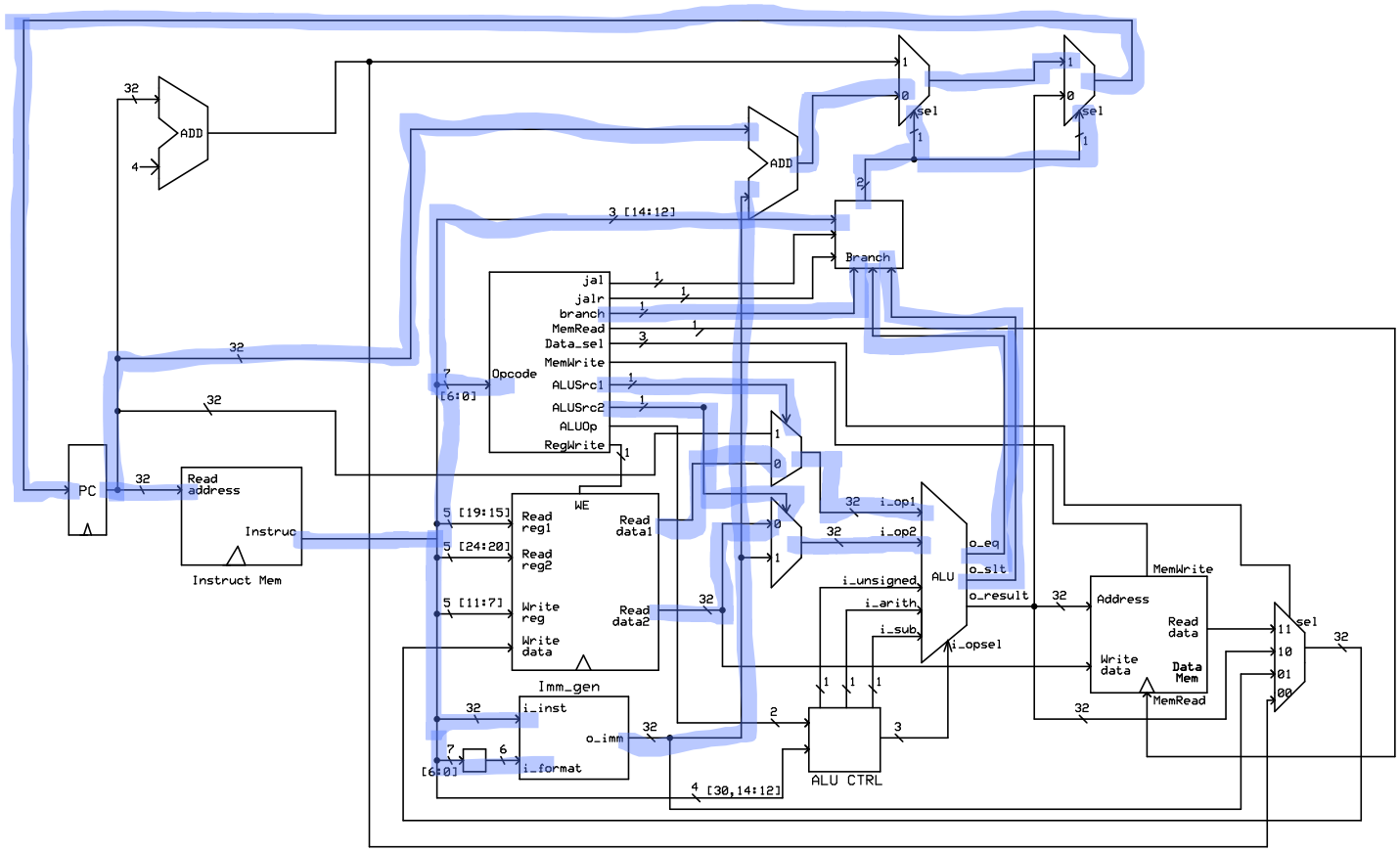

Company Name		
Schematic Name		
Designer's name	Rev 1.0 10/13/2025	Page # or name