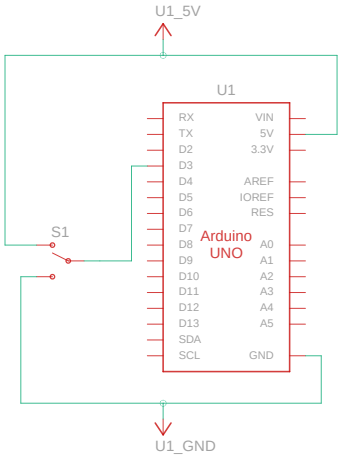

Made with Tinkercad®

Title: Brilliant Maimu

Date: 03/09/2024, 10:03:15

Sheet: 1/1