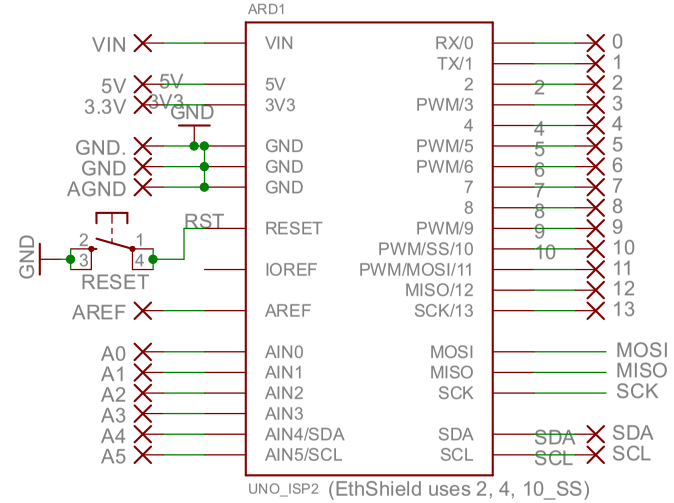

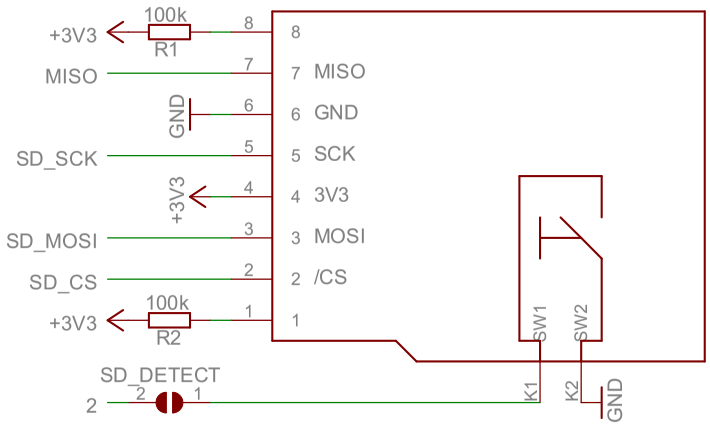

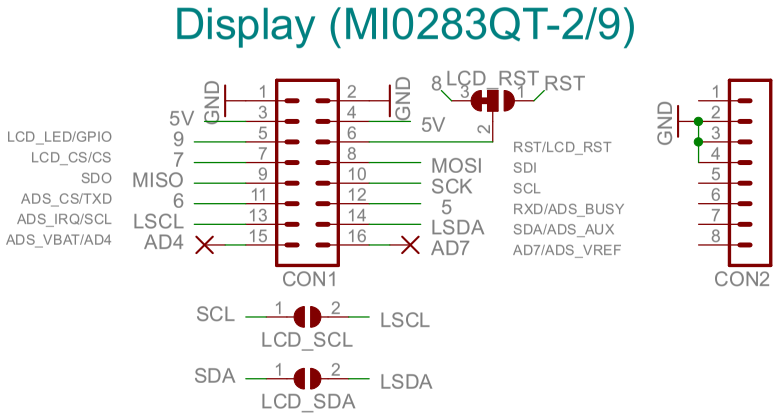

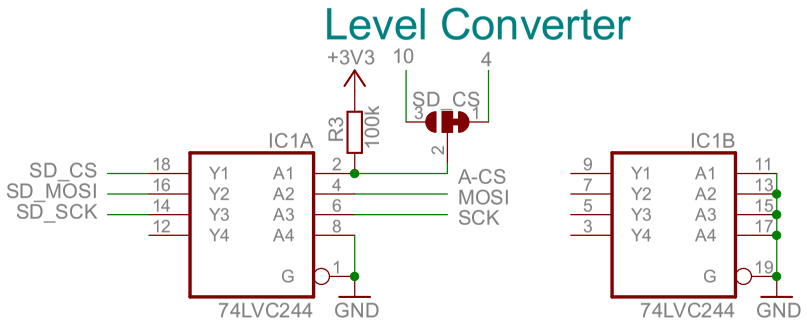

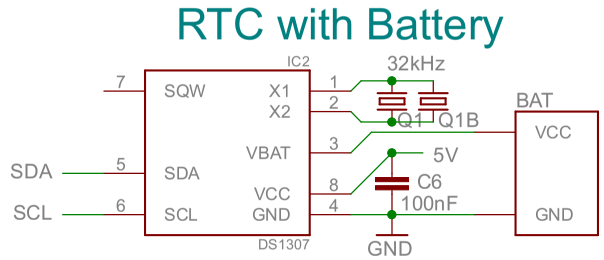

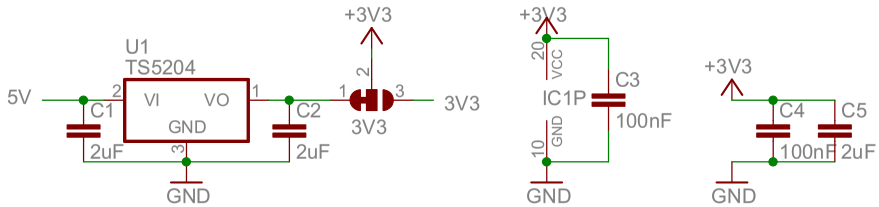

Released under the Creative Commons Attribution Share-Alike 3.0 License
http://creativecommons.org/licenses/by-sa/3.0/

Designed by Andreas Watterott (Watterott electronic)

X1 X2 X3 X4

Logo

OSHW LOGO

mSD-Shield_v20

27.05.2013 15:41:54

Sheet: 1/1

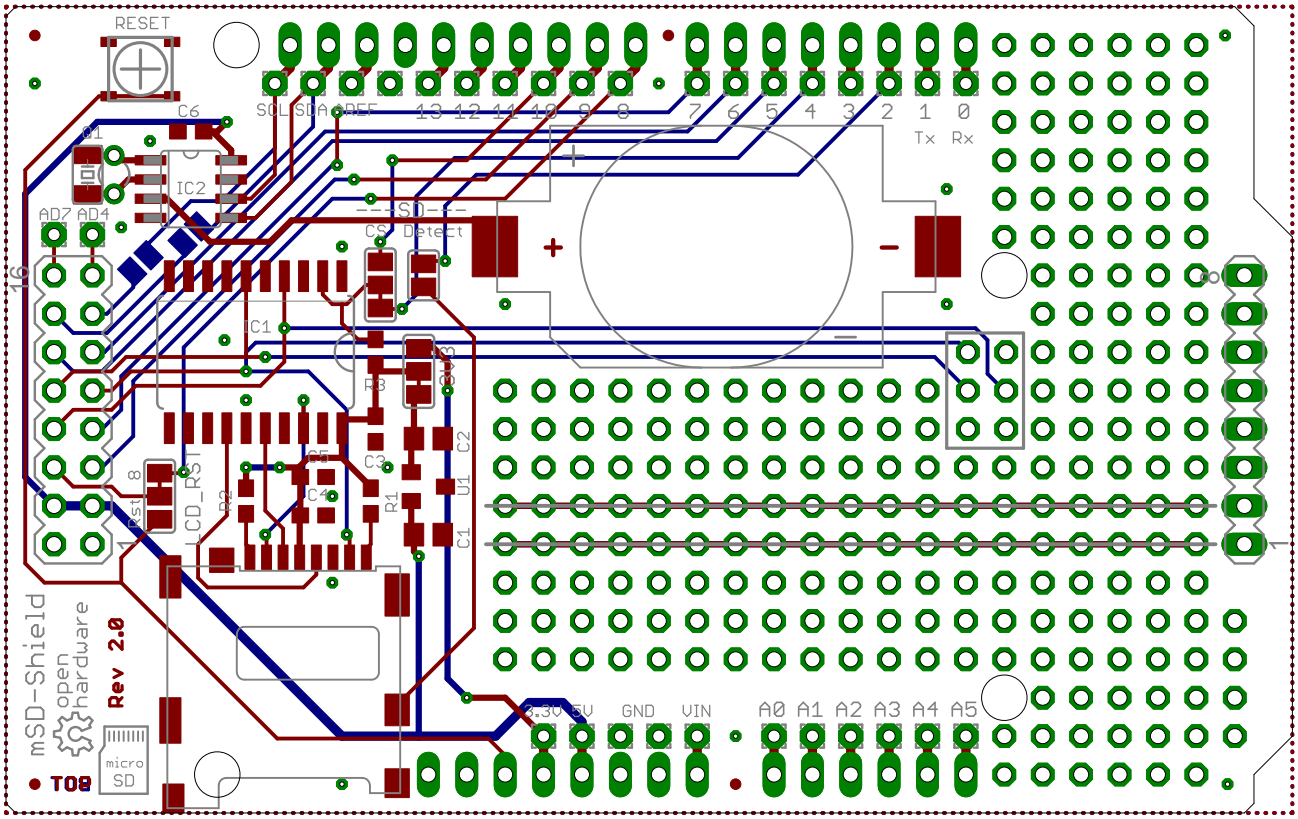
RESET
C6
SCL SDA AREF 13 12 11 10 9 8 7 6 5 4 3 2 1 0
Tx Rx
D1
IC2
AD7 AD4
SD
CS Detect
C1
R3
R4
C2
U1
C5
C3
C4
R1
R2
LCD_RST
Rst
3.3V 5V GND VIN A0 A1 A2 A3 A4 A5
mSD-Shield
open hardware
Rev 2.0
micro SD
TOP