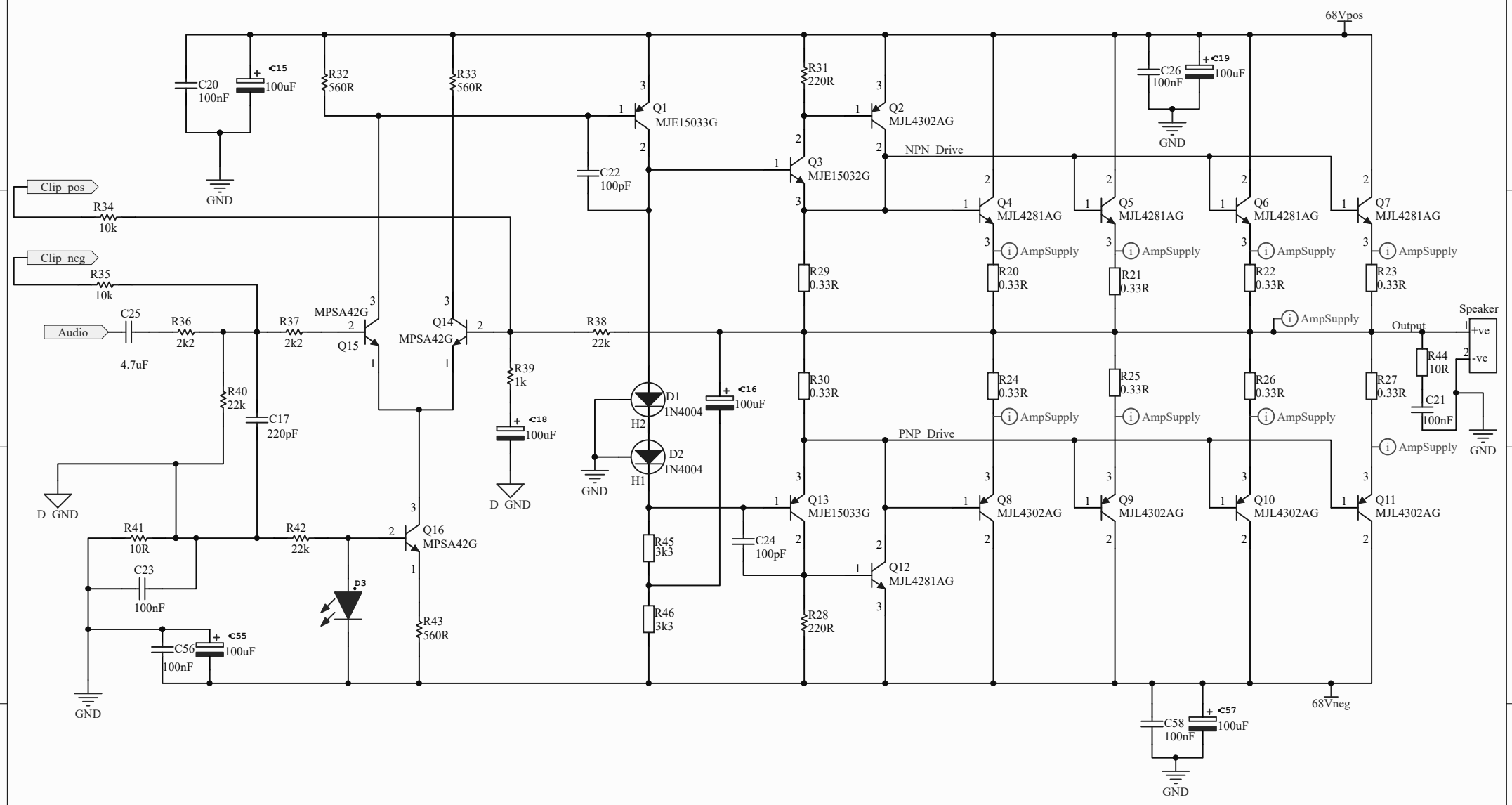

Title: Subwoofer - 400W Power Amp		
Size: A4	Number	Revision: Version 1
Date: 26/02/2025		Sheet 6 of 7
File: C:\Users\..\PowerAmp.SchDoc		Drawn By: Steve Windass