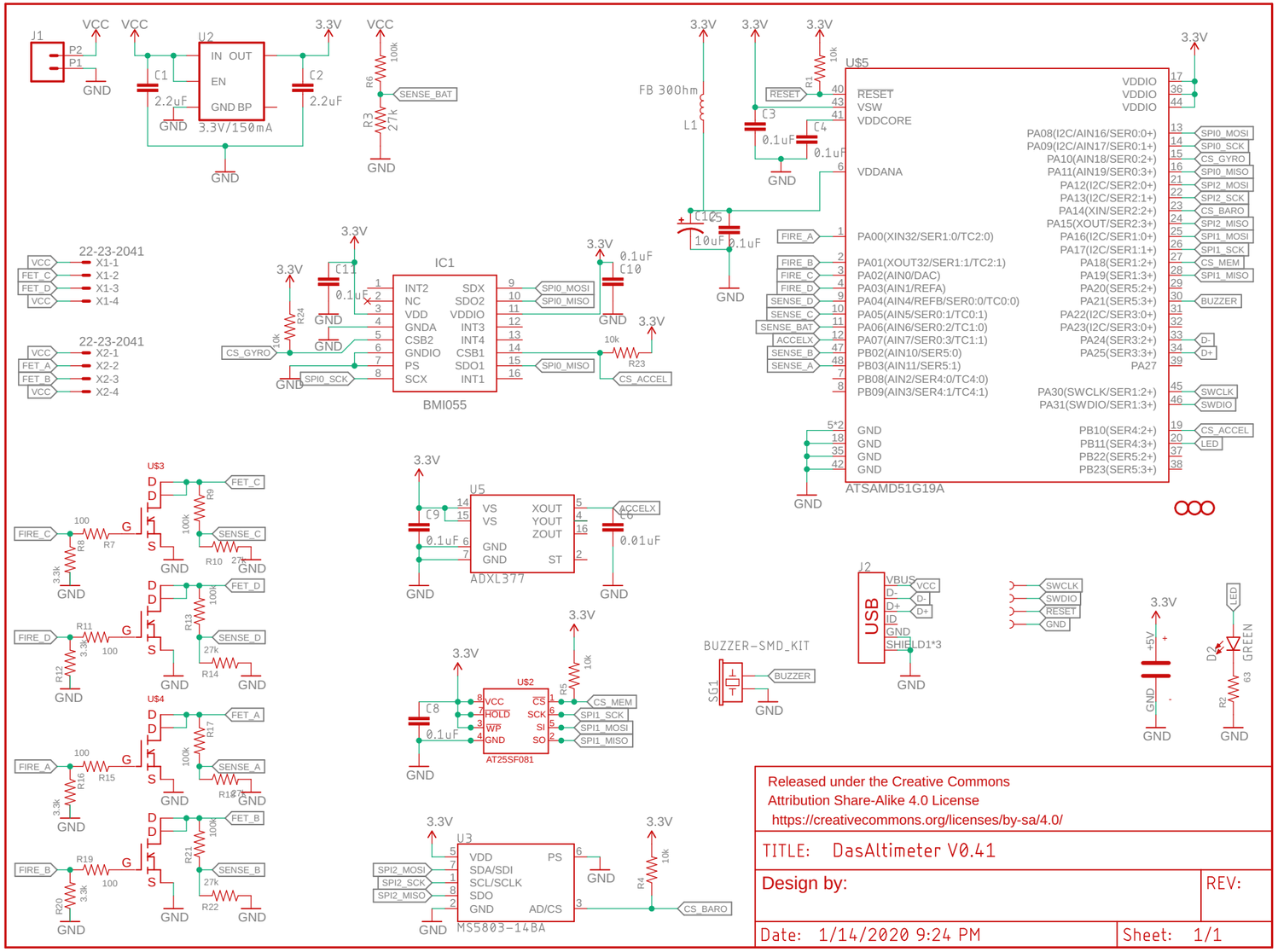

Released under the Creative Commons
Attribution Share-Alike 4.0 License
https://creativecommons.org/licenses/by-sa/4.0/

TITLE: DasAltimeter V0.41

Design by:

REV:

Date: 1/14/2020 9:24 PM

Sheet: 1/1