Zain Ahmed

Mechanical Engineer | CFD • Thermal • Simulation-Driven Design

Experienced in ANSYS Fluent/Mechanical with commercial and research projects involving thermal protection, flow optimization, and structural durability.

Core Skills

CFD | FEA | Conjugate Heat Transfer | Meshing | Transient Analysis | Design Optimization | Experimental Validation

Tools

ANSYS Fluent • ANSYS Mechanical • SolidWorks

Project 1: Heat Shield Enclosure Design

Objective

To design an insulation layer over the circuitory that keeps inner temperature below 85 C for atleast 10 minutes when kept in a furnace at 450 C

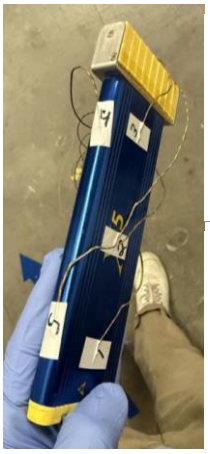

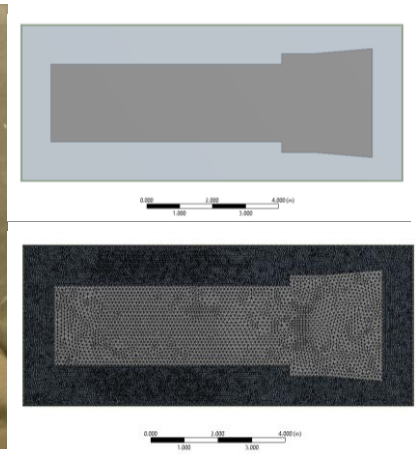

Method

- Software: ANSYS Fluent
- Models: Discrete Ordinates Radiation and Energy Equation
- Physics assumptions: Uniform Heat Flow and Perfect Contact between Surfaces
- Validation approach: Mean Absolute Errors

Key Results

- Aerogel Layer was able to keep internal wall temperature below 85 C for 9 minutes
- Total time calculated showed 6-8% error with experimental data
- Mean Absolute Errors for temperature stayed below 2.5 C for all points

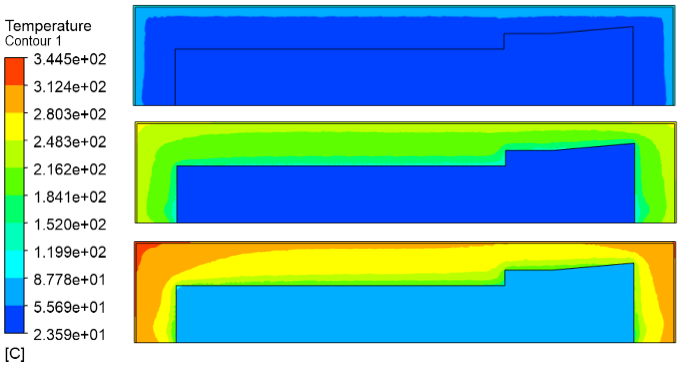

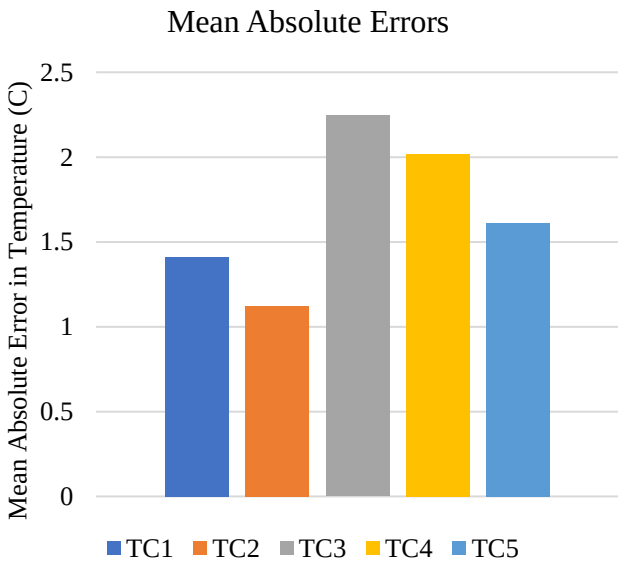

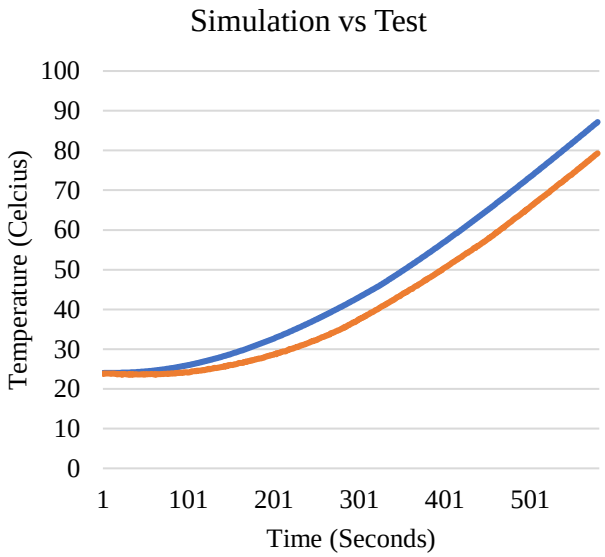

Project 2: CFD Analysis of Spirometer

Objective

To determine the effect of change in blades orientation on maximum flow velocity

Method

- Software: ANSYS Fluent
- Models: Viscous Laminar Model
- Physics assumptions: No Slip Walls and Uniform Openings

Key Results

- Maximum Velocity was obtained at 21 degrees of blade rotation from initial position at 25 mL/s of flow

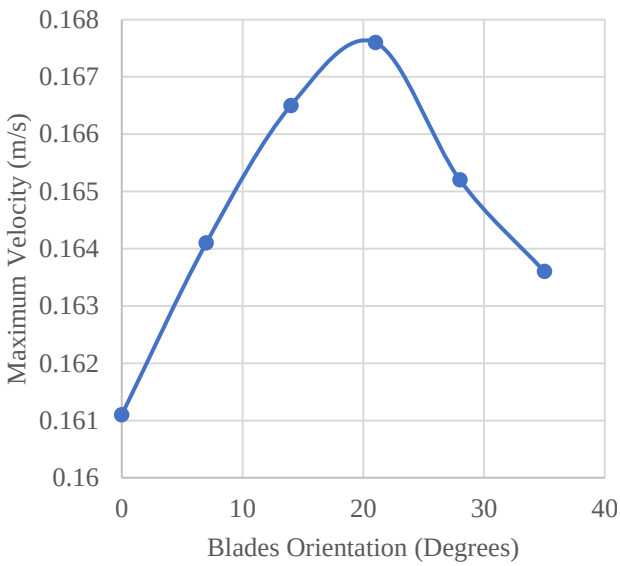

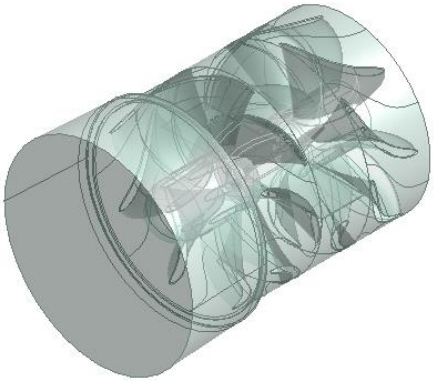

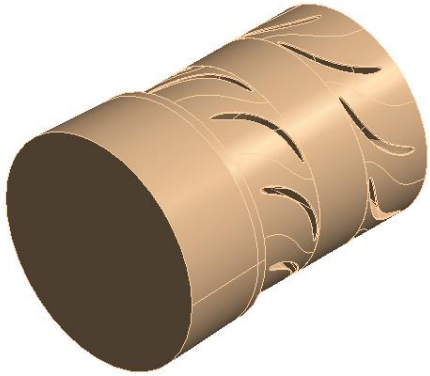

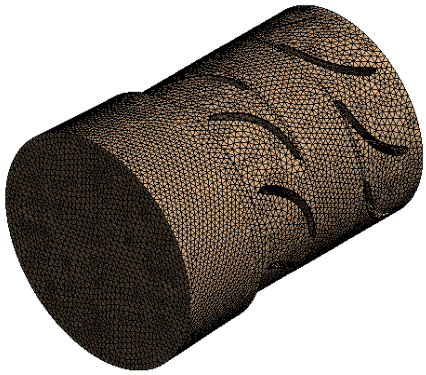

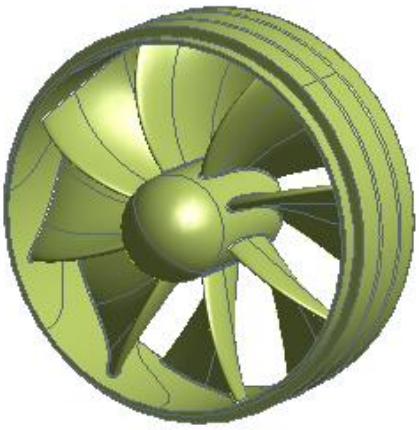

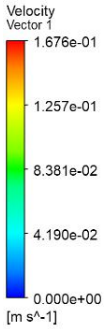

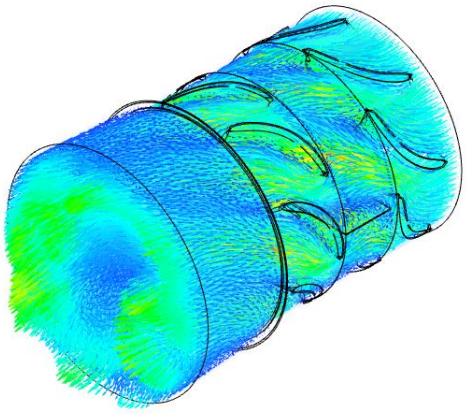

Project 3: Structural Analysis of Coupling

Objective

To create the given geometry from drawings and determine the deformation and stress concentrations on the assembly under torque of 170 MN/m

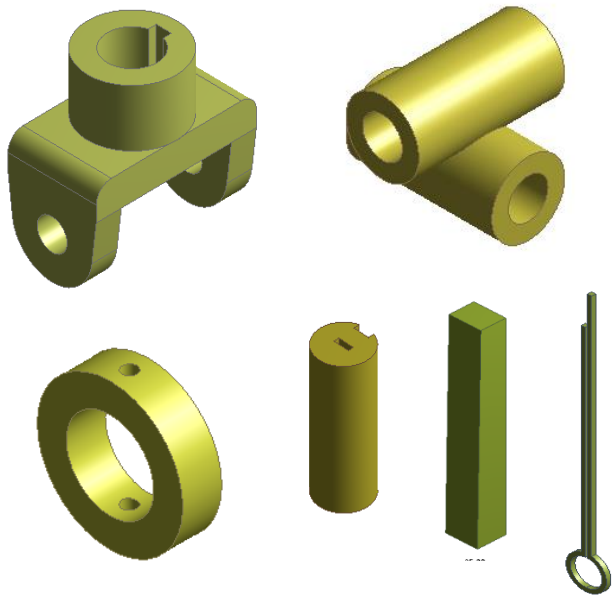

Method

- Software: ANSYS Mechanical
- Models: Static Structural
- Physics assumptions: Perfect Contact between parts (frictionless behaviour)

Key Results

- Mesh Convergence Study showed no more improvement after 80,000 elements
- Maximum Stress of 300 MPa was found at the shaft key

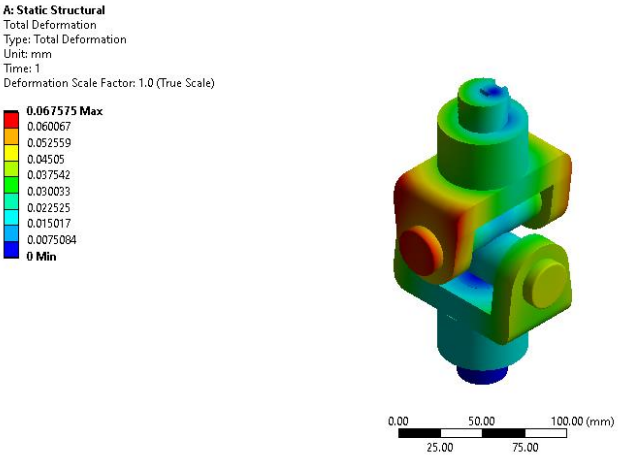

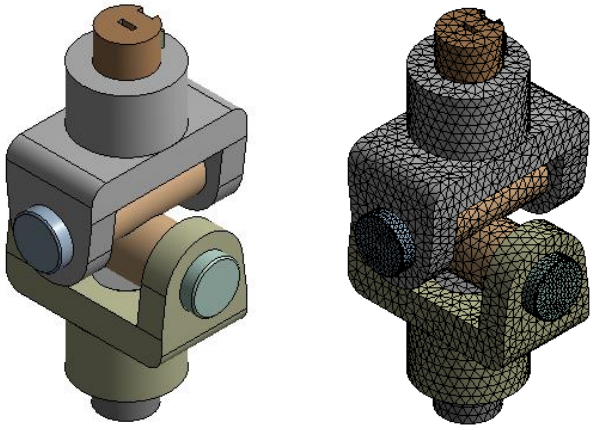

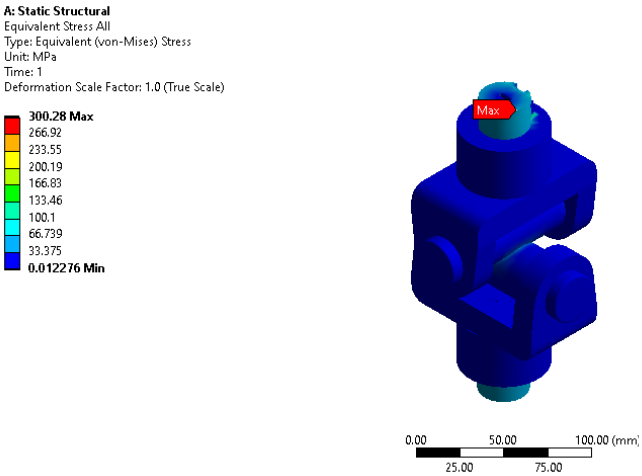

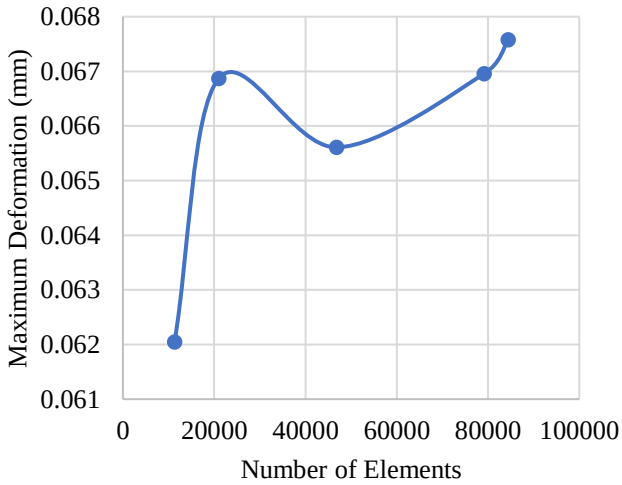

Project 4: Motion Study of Mechanical Clock

Objective

To design an escapement mechanism operated by pendulum that runs a gear train for seconds, minutes and hours hands

Method

- Software: SolidWorks
- Models: Motion Study
- Physics assumptions: Perfect Contact between parts (frictionless behaviour)

Key Results
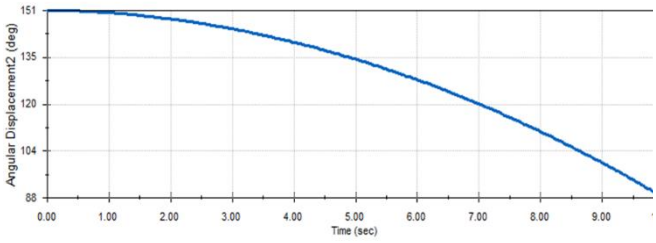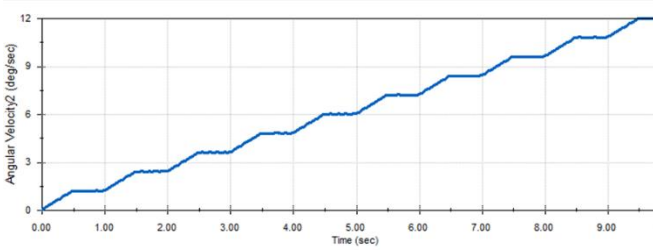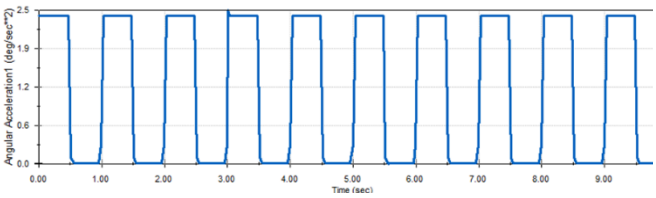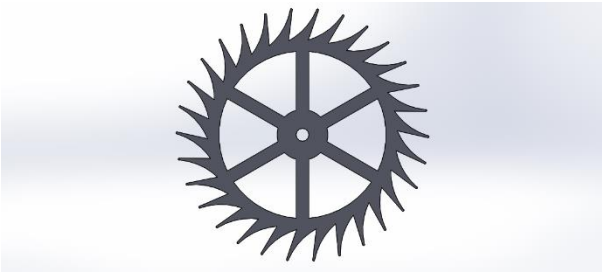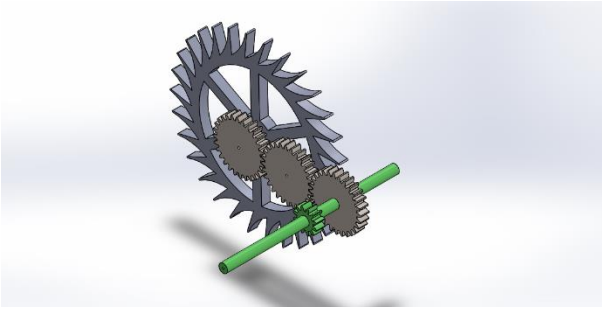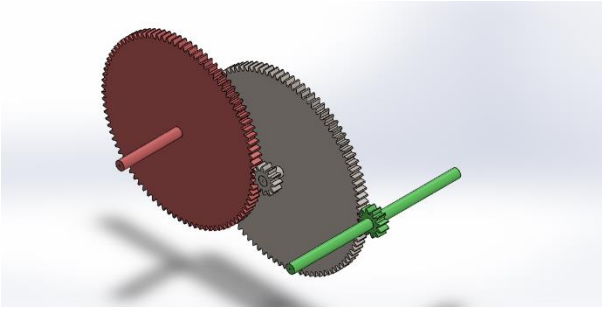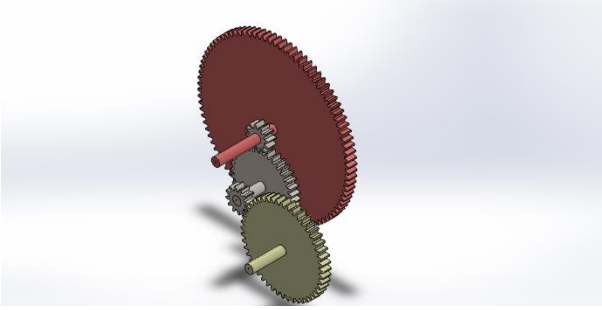
- Acceleration of hands shows stepwise function behaviour
- Velocity of hands shows stepped linear increase
- Displacement of hands shows smooth motion