1.INTRODUCTION

This project focuses on the implementation of a smart atten dance management system using Radio Frequency Identification (RFID). In recent times technologies have minimized the time-consuming process which improves the fast response with high reliability. Hence the idea of RFID emerged to compensate for the requirement in terms of automation in real-time applications. The conventional methods are old enough and are still used in taking student attendance in many institutions and schools. This particular type of attendance system has many loopholes like a student can give fake attendance to friends. If the list is missed they have to take re-attendance, which is a very inefficient method. Right now most of the researchers basically concentrating on RFID systems. The main advantage and utility feasibility of RFID is access control. This could be working in miscellaneous environments.

All the engineers who are working towards developing their innovative products for real-time applications focus their work on RFID. The conventional methods can also create interrup- tions as a result of passing a sheet of papers around during academic lectures, conferences presentations, or workshops. It disturbs both students' and the teachers' attentiveness and concentration. This in turn reduces the effectiveness of such sessions.

This paper introduces a new approach to utilizing RFID (Radio Frequency Identification) to track student attendance that is based on the Internet of Things (IoT). Educational institutions are concerned about student absences. The general academic achievement of a pupil may suffer from truancy. It takes a lot of time and is ineffective to take attendance the old-fashioned way, by calling names or having people sign their names on paper. One of the answers to the issue is an RFID-based attendance system that uses an IoT system. The two most well-liked technological research trends—IoT and RFID are included in the suggested study.

If we look at the state of our educational system right now, we can see that although there are many technologies available, we are still using the conventional system. When it comes to the university and school attendance systems, professors handled that work manually. The database was manually updated by lecturers using the attendance data. When it comes to technology, there are several solutions available that can be used to lighten the load of lectures. One illustration of such is the use of RFID. If RFID and IoT (Internet of Things) are used together, they can be done automatically without the need for lectures. For improved speed, we intend to use the Cloud as storage in this case. We can access it at any time and from any location via IoT and the cloud, giving us greater proficiency and flexibility.

Students are required to be present. The lecturer or teacher cannot evaluate a student's participation without the attendance procedure. However, the current procedure still involves physically taking attendance on paper. The use of excessive paper is the first issue, and it is challenging for the administration to summarize student attendance data that is the second issue. This is due to the administration having to review a large number of attendance records.

Therefore, a system for tracking students' attendance that can gather data quickly, effectively, and precisely is required. By doing data collecting, system analysis, system design, and system implementation, this student attendance system is carried out. .This paper mainly tries to describe the implementation of RFID based smart attendance monitoring system. This RFID system uses RFID cards (tags) to identify student IDs. This particular system monitors attendance using both hardware and software using the Internet of things (IoT). The hardware components include an

RC155 RFID reader and RFID tags. The software components include GUI which is mainly used for viewing the students' attendance and data which is hosted on a server.

2.BLOCK DIAGRAM

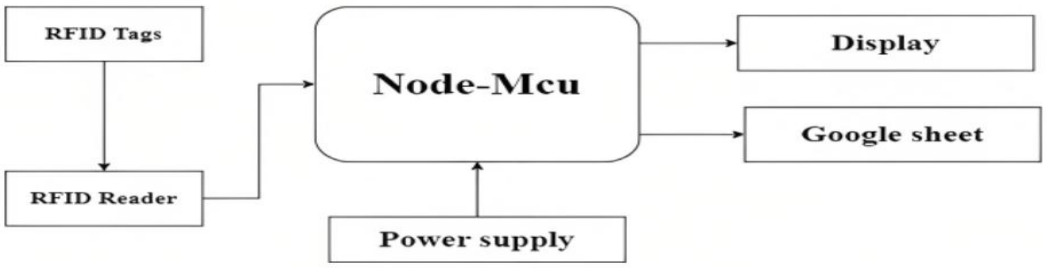

3.CIRCUIT DIAGRAM

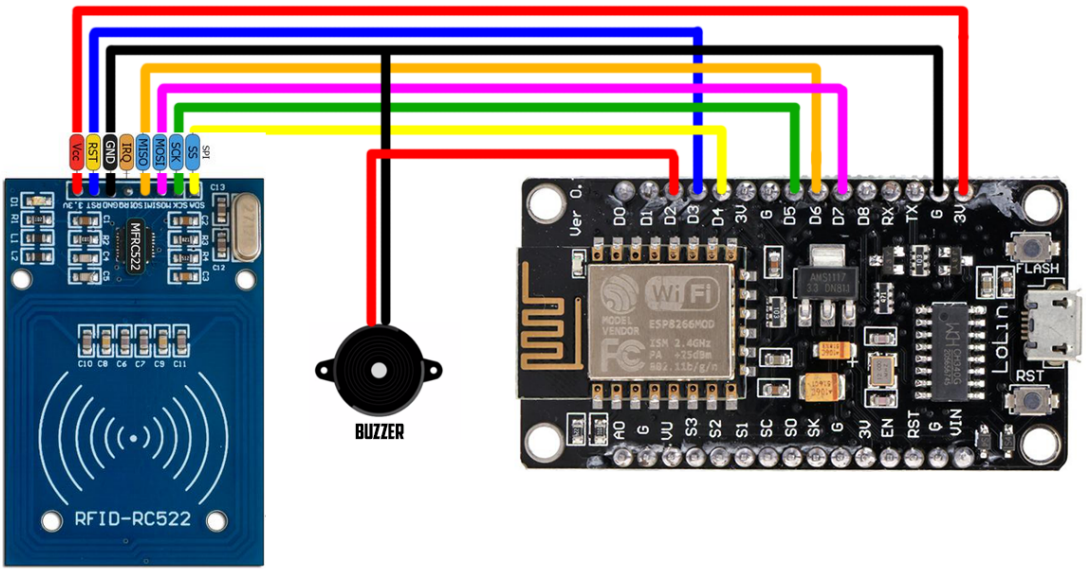

4.COMPONENTS

1. **ESP8266 Nodemcu**
2. **RIFD reader RFID Tags**
3. **Buzzer**
4. **Power Supply**

4.COMBONENTS DESCRIPTION

4.1) ESP8266 Node mcu

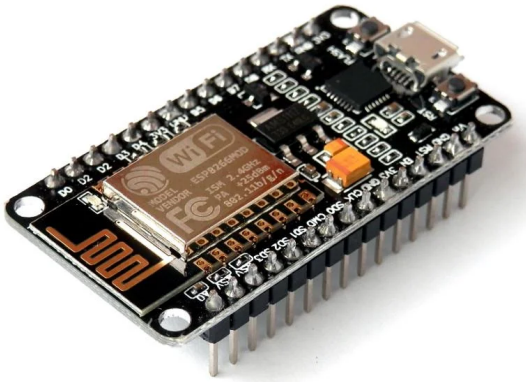

NodeMcu which is an open source platform. NodeMcu is based on ESP8266 which can be used to connect objects and transfer data using Wifi. In this project, the NodeMCU is used to send the attendance on the spreadsheet via the wifi module. Whatever the google spreadsheet code has generated the deployment link, we have to copy that link and paste it into the code and with the help, nodeMCU will send the data on the spreadsheet.

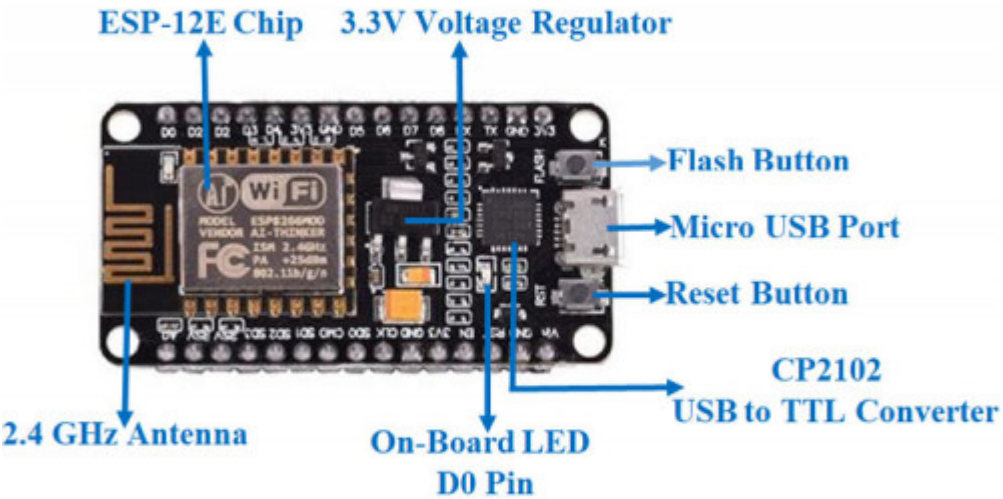

- Microcontroller: Tensilica 32-bit RISC CPU Xtensa LX106

- Operating Voltage: 3.3V
- Input Voltage: 7-12V
- Digital I/O Pins (DIO): 16
- Analog Input Pins (ADC): 1
- UARTs: 1
- SPIs: 1
- I2Cs: 1
- Flash Memory: 4 MB
- SRAM: 64 KB
- Clock Speed: 80 MHz
- USB-TTL based on CP2102 is included onboard, Enabling Plug n Play
- PCB Antenna
- Small Sized module to fit smartly inside your IoT projects

PROGRAM

```
#include <SPI.h>
#include <MFRC522.h>
#include <Arduino.h>
#include <ESP8266WiFi.h>
#include <ESP8266HTTPClient.h>
#include <WiFiClient.h>
#include <WiFiClientSecureBearSSL.h>
//-----------------------------------------
#define RST_PIN  D3
#define SS_PIN   D4
#define BUZZER   D2
//-----------------------------------------
MFRC522 mfrc522(SS_PIN, RST_PIN);
MFRC522::MIFARE_Key key;
MFRC522::StatusCode status;
//-----------------------------------------
/* Be aware of Sector Trailer Blocks */
int blockNum = 2;
/* Create another array to read data from Block */
/* Legthn of buffer should be 2 Bytes more than the size of Block (16 Bytes) */
byte bufferLen = 18;
byte readBlockData[18];
//-----------------------------------------
String card_holder_name;
const String sheet_url = "ENTER_YOUR_SHEET_URL";
//-----------------------------------------
// Fingerprint for demo URL, expires on Monday, May 2, 2022 7:20:58 AM, needs to be
updated well before this date
const uint8_t fingerprint[20] = {0x9a, 0x87, 0x9b, 0x82, 0xe9, 0x19, 0x7e, 0x63, 0x8a, 0xdb,
0x67, 0xed, 0xa7, 0x09, 0xd9, 0x2f, 0x30, 0xde, 0xe7, 0x3c};
//9a 87 9b 82 e9 19 7e 63 8a db 67 ed a7 09 d9 2f 30 de e7 3c
```

```
//----------------------------------------
#define WIFI_SSID "ENTER_YOUR_WIFI_SSID"
#define WIFI_PASSWORD "ENTER_YOUR_WIFI_PASSWORD"
//----------------------------------------

/*************************************************************************
************************
 * setup() function

*************************************************************************
************************/
void setup()
{
  //-----------------------------------------------
  /* Initialize serial communications with the PC */
  Serial.begin(9600);
  //Serial.setDebugOutput(true);
  //-----------------------------------------------
  //WiFi Connectivity
  Serial.println();
  Serial.print("Connecting to AP");
  WiFi.begin(WIFI_SSID, WIFI_PASSWORD);
  while (WiFi.status() != WL_CONNECTED){
    Serial.print(".");
    delay(200);
  }
  Serial.println("");
  Serial.println("WiFi connected.");
  Serial.println("IP address: ");
  Serial.println(WiFi.localIP());
  Serial.println();
  //-----------------------------------------------
  /* Set BUZZER as OUTPUT */
  pinMode(BUZZER, OUTPUT);
  //-----------------------------------------------
  /* Initialize SPI bus */
  SPI.begin();
  //-----------------------------------------------
}

/*************************************************************************
************************
 * loop() function

*************************************************************************
************************/
 void loop()
{
  //-----------------------------------------------
  /* Initialize MFRC522 Module */
```

```
  mfrc522.PCD_Init();
  /* Look for new cards */
  /* Reset the loop if no new card is present on RC522 Reader */
  if ( ! mfrc522.PICC_IsNewCardPresent()) {return;}
  /* Select one of the cards */
  if ( ! mfrc522.PICC_ReadCardSerial()) {return;}
  /* Read data from the same block */
  //-------------------------------------------------
  Serial.println();
  Serial.println(F("Reading last data from RFID..."));
  ReadDataFromBlock(blockNum, readBlockData);
  /* If you want to print the full memory dump, uncomment the next line */
  //mfrc522.PICC_DumpToSerial(&(mfrc522.uid));

  /* Print the data read from block */
  Serial.println();
  Serial.print(F("Last data in RFID:"));
  Serial.print(blockNum);
  Serial.print(F(" --> "));
  for (int j=0 ; j<16 ; j++)
  {
    Serial.write(readBlockData[j]);
  }
  Serial.println();
  //-------------------------------------------------
  digitalWrite(BUZZER, HIGH);
  delay(200);
  digitalWrite(BUZZER, LOW);
  delay(200);
  digitalWrite(BUZZER, HIGH);
  delay(200);
  digitalWrite(BUZZER, LOW);
  //-------------------------------------------------
//MMMM
```

```
   Serial.print(F("[HTTPS] begin...\n"));
   //-----------------------------------------------------------------
//NNNN
```

```
  /* Prepare the ksy for authentication */
  /* All keys are set to FFFFFFFFFFFFh at chip delivery from the factory */
  for (byte i = 0; i < 6; i++) {
    key.keyByte[i] = 0xFF;
  }
  //-----------------------------------------------------------------------------
  /* Authenticating the desired data block for Read access using Key A */
  status = mfrc522.PCD_Authenticate(MFRC522::PICC_CMD_MF_AUTH_KEY_A,
blockNum, &key, &(mfrc522.uid));
  //-----------------------------------------------------------------------------s
  if (status != MFRC522::STATUS_OK){
     Serial.print("Authentication failed for Read: ");
     Serial.println(mfrc522.GetStatusCodeName(status));
     return;
  }
  //-----------------------------------------------------------------------------
  else {
    Serial.println("Authentication success");
  }
  //-----------------------------------------------------------------------------
  /* Reading data from the Block */
  status = mfrc522.MIFARE_Read(blockNum, readBlockData, &bufferLen);
  if (status != MFRC522::STATUS_OK) {
    Serial.print("Reading failed: ");
    Serial.println(mfrc522.GetStatusCodeName(status));
    return;
  }
  //-----------------------------------------------------------------------------
  else {
    Serial.println("Block was read successfully");
  }
  //-----------------------------------------------------------------------------
}/* ---------------------------------------------------------------------------
 * Created by: Tauseef Ahmad
 * Created on: 23 Feb, 2022
 *
 * Tutorial: https://youtu.be/aNjkNmHRx4o
 * ---------------------------------------------------------------------------
 * Download Resources
 * ---------------------------------------------------------------------------
 * Preferences--> Additional boards Manager URLs :
 * For ESP8266 and NodeMCU - Version 3.0.2
 * http://arduino.esp8266.com/stable/package_esp8266com_index.json
 * ---------------------------------------------------------------------------*/

#include <SPI.h>
#include <MFRC522.h>
#include <Arduino.h>
#include <ESP8266WiFi.h>
#include <ESP8266HTTPClient.h>
```

```
#include <WiFiClient.h>
#include <WiFiClientSecureBearSSL.h>
//----------------------------------------
#define RST_PIN  D3
#define SS_PIN   D4
#define BUZZER   D2
//----------------------------------------
MFRC522 mfrc522(SS_PIN, RST_PIN);
MFRC522::MIFARE_Key key;
MFRC522::StatusCode status;
//----------------------------------------
/* Be aware of Sector Trailer Blocks */
int blockNum = 2;
/* Create another array to read data from Block */
/* Legthn of buffer should be 2 Bytes more than the size of Block (16 Bytes) */
byte bufferLen = 18;
byte readBlockData[18];
//----------------------------------------
String card_holder_name;
const String sheet_url = "ENTER_YOUR_SHEET_URL";
//----------------------------------------
// Fingerprint for demo URL, expires on Monday, May 2, 2022 7:20:58 AM, needs to be
updated well before this date
const uint8_t fingerprint[20] = {0x9a, 0x87, 0x9b, 0x82, 0xe9, 0x19, 0x7e, 0x63, 0x8a, 0xdb,
0x67, 0xed, 0xa7, 0x09, 0xd9, 0x2f, 0x30, 0xde, 0xe7, 0x3c};
//9a 87 9b 82 e9 19 7e 63 8a db 67 ed a7 09 d9 2f 30 de e7 3c
//----------------------------------------
#define WIFI_SSID "ENTER_YOUR_WIFI_SSID"
#define WIFI_PASSWORD "ENTER_YOUR_WIFI_PASSWORD"
//----------------------------------------

/*************************************************************************
************************
 * setup() function

*************************************************************************
************************/
void setup()
{
  //-------------------------------------------------
  /* Initialize serial communications with the PC */
  Serial.begin(9600);
  //Serial.setDebugOutput(true);
  //-------------------------------------------------
  //WiFi Connectivity
  Serial.println();
  Serial.print("Connecting to AP");
  WiFi.begin(WIFI_SSID, WIFI_PASSWORD);
  while (WiFi.status() != WL_CONNECTED){
    Serial.print(".");
```

```
  delay(200);
 }
 Serial.println("");
 Serial.println("WiFi connected.");
 Serial.println("IP address: ");
 Serial.println(WiFi.localIP());
 Serial.println();
 //-----------------------------------------------
 /* Set BUZZER as OUTPUT */
 pinMode(BUZZER, OUTPUT);
 //-----------------------------------------------
 /* Initialize SPI bus */
 SPI.begin();
 //-----------------------------------------------
}

/*****************************************************************************
************************
 * loop() function

*****************************************************************************
************************/
 void loop()
{
 //-----------------------------------------------
 /* Initialize MFRC522 Module */
 mfrc522.PCD_Init();
 /* Look for new cards */
 /* Reset the loop if no new card is present on RC522 Reader */
 if ( ! mfrc522.PICC_IsNewCardPresent()) {return;}
 /* Select one of the cards */
 if ( ! mfrc522.PICC_ReadCardSerial()) {return;}
 /* Read data from the same block */
 //-----------------------------------------------
 Serial.println();
 Serial.println(F("Reading last data from RFID...")); 
 ReadDataFromBlock(blockNum, readBlockData);
 /* If you want to print the full memory dump, uncomment the next line */
 //mfrc522.PICC_DumpToSerial(&(mfrc522.uid));

 /* Print the data read from block */
 Serial.println();
 Serial.print(F("Last data in RFID:"));
 Serial.print(blockNum);
 Serial.print(F(" --> "));
 for (int j=0 ; j<16 ; j++)
 {
  Serial.write(readBlockData[j]);
 }
 Serial.println();
```

```
  //-----------------------------------------------
  digitalWrite(BUZZER, HIGH);
  delay(200);
  digitalWrite(BUZZER, LOW);
  delay(200);
  digitalWrite(BUZZER, HIGH);
  delay(200);
  digitalWrite(BUZZER, LOW);
  //-----------------------------------------------

//MMMM
```

```
    //-------------------------------------------------------------
    https.end();
    delay(1000);
   }

//NNNN
```

```
  status = mfrc522.MIFARE_Read(blockNum, readBlockData, &bufferLen);
  if (status != MFRC522::STATUS_OK) {
    Serial.print("Reading failed: ");
    Serial.println(mfrc522.GetStatusCodeName(status));
    return;
  }
  //-----------------------------------------------------------------------------
  else {
    Serial.println("Block was read successfully");
  }
  //-----------------------------------------------------------------------------
}
```

PROGRAM Flow Chart

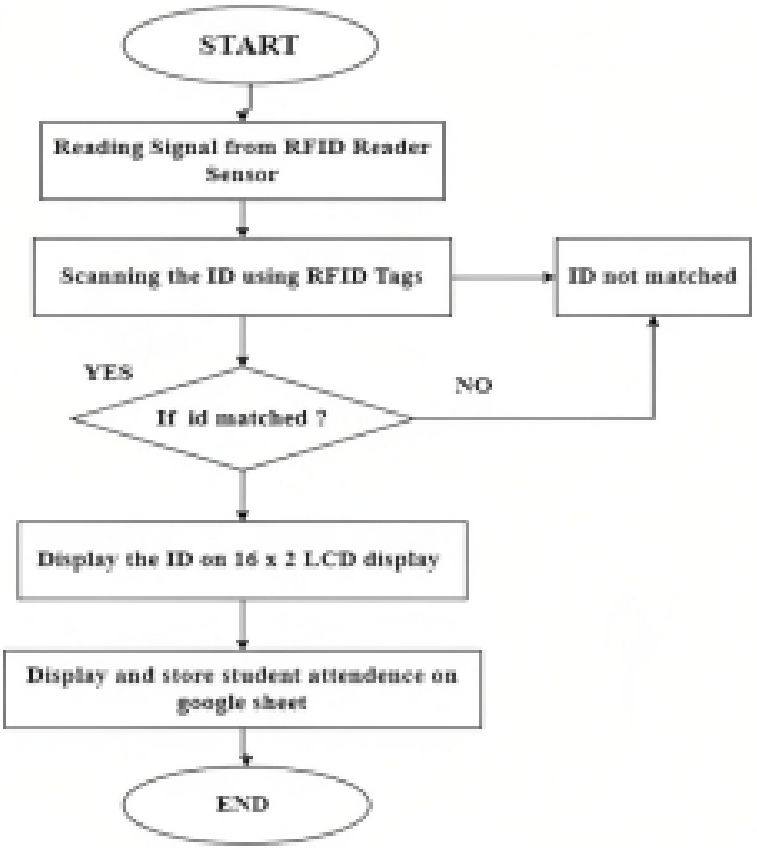

4.2) RFID READER

An RFID reader consists of an antenna and a Radio fre quency module which basically generates a high-frequency electromagnetic field. As we all know an RFID tag is a passive device which means that it doesn't have a power supply or a battery. An RFID reader has a microchip that is used to store and process the information. And also it has an antenna that is used to receive to transmit a signal. To read the information on the RFID tag it needs to be placed in very close range of the reader. An RFID reader basically generates an electromagnetic field that causes electrons to move through the tag in the antenna and it powers up the chip.

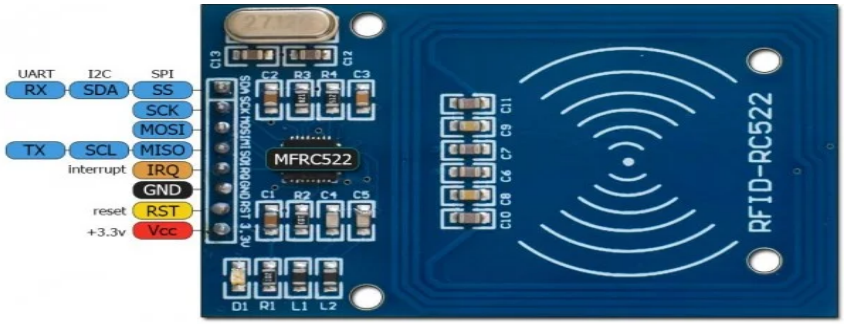

- Integrated MF RC522
- 13.56MHz contactless communication card chip.
- The low-voltage, low-cost, small size of the non-contact card chip to read and write.
- Working current : 13 – 26mA / DC 3.3V
- Standby current : 10 – 13mA / DC 3.3V
- Sleep current : <80uA
- Peak current : <30mA
- Working frequency : 13.56MHz
- Card reading distance : 0～60mm（Mifare1 card）

4.3) RFID TAG

The RFID tags are differentiated as passive and active tags. If the device doesn't have its power supply it is called a passive RFID tag. Thus, The passive tags have to be in very close range of an RFID reader and make use of the radio waves which are broadcasted by the reader to power the response alternatively if the device has its battery power to perform entire operations which are called active RFID tags.

4.4) **Buzzer**

An audio signaling device like a beeper or buzzer may be electromechanical or piezoelectric, Its function is to convert the signal from audio to sound A piezoelectric element may be driven by an oscillating electronic circuit or other audio signal source, driven with a piezoelectric audio amplifier. Sounds commonly used to indicate that a button has been pressed are a click, a ring or a beep

- The frequency range is 3,300Hz
- Operating Temperature ranges from – 20° C to +60°C
- Operating voltage ranges from 3V to 24V DC
- The sound pressure level is 85dBA or 10cm
- The supply current is below 15mA

4.5) POWERS SUPPLY

A **power supply** is an electrical device that supplies electric power to an electrical load. The primary function of a power supply is to convert electric current from a source to the correct voltage, current, and frequency to power the load. As a result, power supplies are sometimes referred to as electric power converters. Some power supplies are separate standalone pieces of equipment, while others are built into the load appliances that they power. Examples of the latter include power supplies found in desktop computers and consumer electronics devices. Other functions that power supplies may perform include limiting the current drawn by the load to safe levels, shutting off the current in the event of an electrical fault, power conditioning to prevent electronic noise or voltage surges on the input from reaching the load, power-factor correction, and storing energy so it can continue to power the load in the event of a temporary interruption .

5) METHODOLOGY

The project Smart attendance system using RFID. Which mainly consists of Node-Mcu (ESP-8266), RFID Cards RFID readers, A breadboard. Here Node-Mcu acts as a Central processing unit (CPU) for controlling all the input/output components. For this project, we have used a 5v power supply to power up the node MCU and other components.RFID reader module is interfaced with Node Mcu to read the data from RFID cards/tags.the permanent attendance is stored on a google sheet using IoT. In this system, a student or employee has to place /put his card on an RFID reader. When the RFID reader reads the data it directly transfers the data to Node-Mcu and the permanent attendance is stored on a google sheet

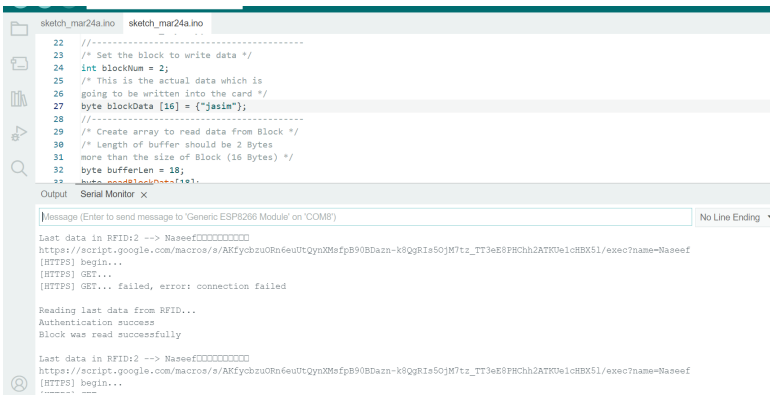

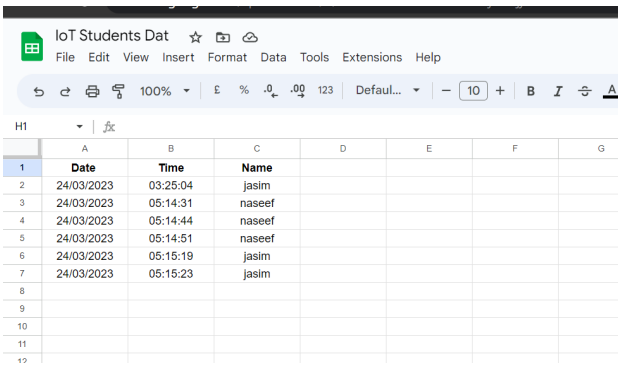

6)FUTURE SCOPE

In further future, there can be more enhancement by developing a mobile app. To send SMS for alert notifications, we can also use GSM modules according to the hardware need. Thing speak can be used for data analysis. To reduce the misuse of RFID tags, biometric technology like iris sensors or fingerprint sensors or image processing can be used for unique identity to improve authorization.

8) CONCLUSION AND FUTURE SCOPE

We aimed to get effective and efficient time-saving auto mated computerized attendance in real-time with a ready excel sheet to maintain attendance records we conclude that this user-friendly proposed system can be proved to be easy to use and implement, cost efficient, time-saving, less tedious, and portable. To overcome all the drawbacks, unreliable and inaccurate manual work, this proposed system gets improved with very minimal effort and yet generates the results with maximal accuracy and qualitative. Ultimately, the system improves academic performance which encourages time saves and accuracy in attendance

9) REFERENCE

There are several research significances of this project which are:

- Bhagat, Rinku. "An MQTT based IoT-RFID Attendance System using NodeMCU Firmware: A Review." International Research Journal of Engineering and Technology (IRJET) 7, no. 06 (2020): 1255-1259.

- Lim, T. S., S. C. Sim, and M. M. Mansor. "RFID based attendance system." In 2009 IEEE Symposium on Industrial Electronics & Applications, vol. 2, pp. 778-782. IEEE, 2009.

- Meghana, Inturi, J. D. N. V. L. Meghana, and Ramesh Jayaraman. "Smart Attendance Management System using Radio Frequency Identification." In 2020 International Conference on Communication and Signal Processing (ICCSP), pp. 1045-1049. IEEE, 2020.

- Kovelan, P., N. Thisenthira, and T. Kartheeswaran. "Automated attendance monitoring system using IoT." In 2019 International Conference on Advancements in Computing (ICAC), pp. 376-379. IEEE, 2019.

- Shah, Soumil Nitin, and Abdelshakour Abuzneid. "IoT based smart attendance system (SAS) using RFID." In 2019 IEEE Long Island Systems, Applications and Technology Conference (LISAT), pp. 1-6. IEEE, 2019