Optical Loss & Spectrum

EE 430 - Introduction to Optical Communications - Fall 2022

NAME ____Sabit Ahmed _____ DATE: _03/05/2025_____

PARTNER _____Eduardo_____ (must have a partner)

Note: no more than one teammate is allowed

Link to this document:
https://docs.google.com/document/d/1ggNj7RjCBq88cbQZeNwgdQeIpR5DcFuAhkfavbu7sYs/edit?usp=sharing

Please make sure you submit your assignment individually!

Attention:
All measurements in this lab must be done with another partner.
You will not receive a grade if you do not have a partner!
Do not enter the lab alone!

Prior to completing the lab, you must have attended the basic training by the instructor!

Please make sure you sign up for a timeslot to complete the lab; click here:
https://docs.google.com/document/d/1AqdFRS0_eDpLCvIbX5quqhyXXBPj3WTP4QuUT4ZzYgY/edit?usp=sharing

Optical Loss & Spectrum

EE 430 - Introduction to Optical Communications - Fall 2022

1. Assignment Overview

The objective of this lab is to become familiar with basic optical measurement equipment.

2. Learning Objectives

- Be able to measure fiber loss
- Calculate 3/20 dB spectral width

3. Required Materials & Reference Information

- Test equipment is shown in the figure below.

4. Experiment

In this experiment we use different optical measurement equipment. The following figure shows the basic setup for this experiment.

DO NOT remove any fibers except the ones connected to the Optical Panel
(shown by a dashed line in the figure).

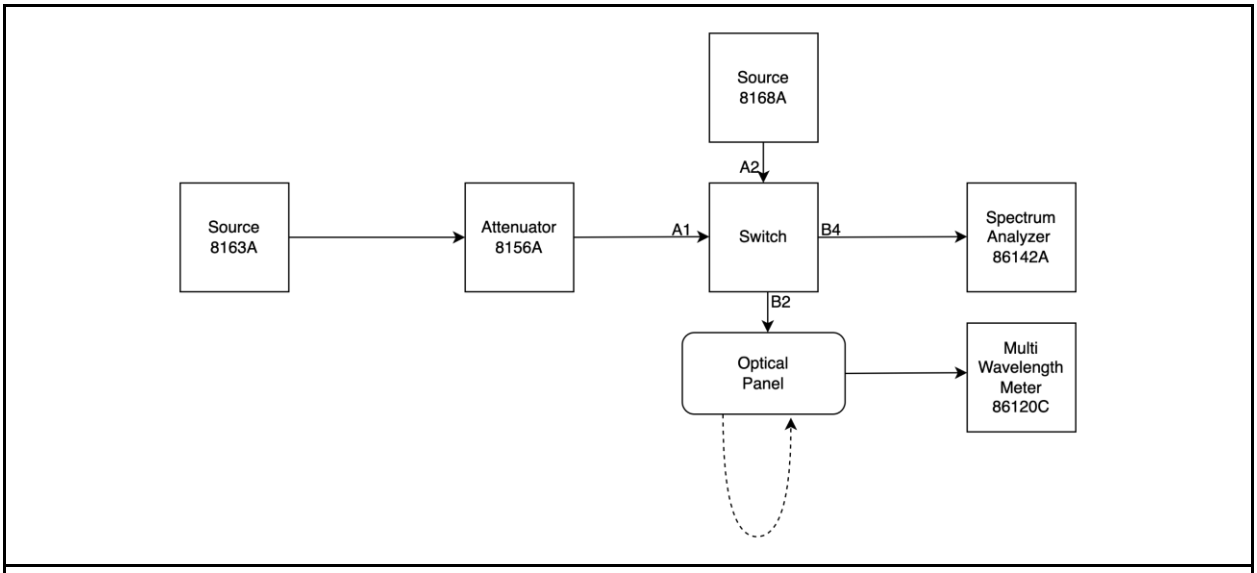

Experiment Setup

Before you start this lab make sure the bench is clean and everything is in order.	Y

Is the bench clean?	Y

4.1 Procedure

Turn on all the testing devices which are marked by the YELLOW tag. Wait for a few minutes until all the machines are ready to operate. Follow the steps below and answer the questions.

1. On the Laser Source, 8163A set the source to 1307 nm
2. Make sure the Active Green LED is on by turning on the laser output.
3. On the attenuator set up the following:
   a. Set WL = 1307
   b. Set Att=0.000
   c. Set Cal = 0.0
4. On the Attenuator click on the En/Dis button and turn on the attenuator output.
5. On the switch make sure you select A and B such that the output of the attenuator is directed to the fiber panel.
   a. Use the shadowed circle button to change A or B slides, then use the arrow keys to change the setting.
6. In the multi-wavelength meter find the peak WL. Record your results, including the units:

Peak WL: ____1308.831_____, Unit: ____nm_____
Our laser Source 8163A (input 1307 nm, P_{input} = 84.91dbm)we connect it to the attenuator input, the output enable port of attenuator connected to the switch port A1 then we selected the input A1 by pressing the shadowed button of switch, and the other port B1 to fiber loop and from fiber loop to the multi-wavelength meter 86120C. Again we need to select the output of the switch port to B1 by using the shadowed button and arrow signs on it. By doing that we can see the peak wavelength by pressing peak button on multi-wavelength meter and it came up , 1308.831 nm with power -42.26dbm which is slightly higher wavelength than the input. The reason we are getting slightly higher value wavelength is for the whole system we connected through getting some noise and Fiber & Connector Losses which causes misalignment, dispersion, or reflections may shift the peak.

7. In the wavelength meter list by WL. Record your results, including the units:

So now the connection is the same as above , but we pressed the button in wavelength meter called “list by WL” and we got different values of wavelength associated with different power in dbm. The values are :

Wavelengths(nm)	**Power (nW)**
1304.898	9.08
1305.291	10
1305.681	15.38

1306.073	16.94
1306.465	26
1306.857.	29.58
1307.250nm	25.35 nW
1307.642nm.	50.93 nW
1308.035 nm.	30.41 nW
1308.429nm.	59.70 nW
1308.431nm.	59.97 nW
1309.224nm.	14.79 nW

So as we can see the, we were getting the different wavelengths though the laser source is fixed to 1307 nm. We are having it because Some light may reflect within the fiber, creating additional weak wavelength components. The multi-wavelength meter might have a certain resolution that allows it to detect small variations around the central wavelength. So the meter may pick up environmental noise or reflections from surrounding components.

8. Based on your results in the above question, calculate the average power. Record your results, including the units:

Based on previous experiment, the total Power is :
Total Power=(9.08+10+15.38+16.94+26+29.58+25.35+50.93+30.41+59.70+59.97+14.79) = **348.13 nW**
Numeber of Measurements : **12**
Average power : $\frac{\mathbf{348.13\ nW}}{\mathbf{12}}$ **= 29.01 nW**

This value represents the typical power level is observed across all 12 measurements. It provides insight into the consistency of power transmission in the system.

9. Plot 7 Wavelengths with their corresponding measured power. Make sure the power access is in dBm. You need to include the peak WL.

7 wavelengths corresponding measured power :

Wavelengths(nm)	**Power (dbm)**
1304.898 nm	-50.48
1305.289 nm.	-49.65
1305.68 nm.	-48.09
1306.074 nm.	-47.93
1306.46 nm.	-45.80
1306.858 nm.	-45.18
1308.831 nm.	**-42.26(peak)**

My code in Matlab :

```
% Define the wavelengths (nm) and corresponding power in dBm
wavelengths = [1304.898, 1305.289, 1305.68, 1306.074, 1306.46, 1306.858, 1308.831];
power_dBm = [-50.48, -49.65, -48.09, -47.93, -45.80, -45.18, -42.26];

% Plotting the data
figure;
plot(wavelengths, power_dBm, 'o-', 'LineWidth', 2, 'MarkerSize', 8);
hold on;

% peak adding
peak_wavelength = 1308.831;
peak_power = -42.26;
plot(peak_wavelength, peak_power, 'ro', 'MarkerFaceColor', 'r', 'MarkerSize', 10);

% Add labels and title
xlabel('Wavelength (nm)');
ylabel('Power (dBm)');
title('Wavelength vs Power (dBm)');

% Adding  a legend
legend('Power vs Wavelength', 'Peak at 1308.831 nm', 'Location', 'best');
```

Figure 1 : Matlab Code to plot the Wavelength(nm) vs Power (dBm)

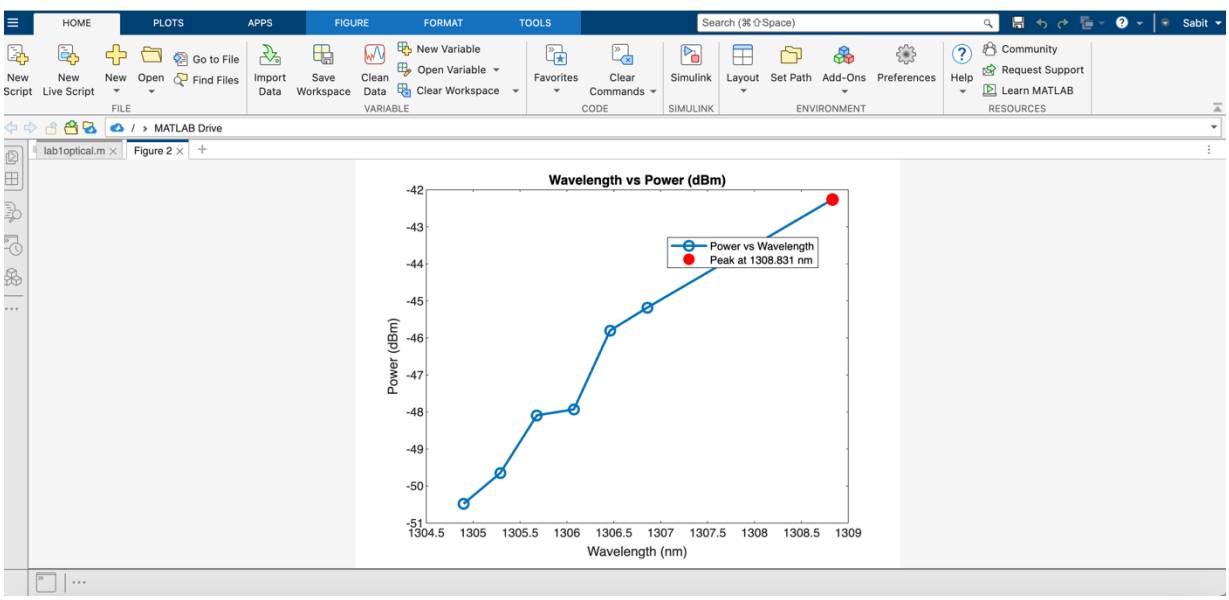

Figure 2 : Wavelength(nm) Vs Power(dBm)

10. Inspect the spliced fiber on the bench: To inspect a fiber connector using a fiber optic scope, first, insert the fiber connector into the scope's adapter and focus on the ferrule endface. Look for dirt, scratches, or contamination - any debris or smudges indicate the need for cleaning. If the connector appears clean with no visible defects, it is ready for use. Otherwise, proper cleaning is required.

11. Gently, remove the **fiber loop from the fiber panel** and replace it with the spliced fiber in the drawing. Before screwing in the fiber use cleaning tape to clean the fiber tip, as shown below.
12. Measure the loss due to the splicing and record it. Explain how you calculated the loss.

With the fiber splice we get peak wavelength 1308.831 nm and Power = - 41.33 dBm
And with the regular fiber cable wavelength remains same and Power = -40.85 dBm. And our Input power from the source = 84.91dBm.

To calculate the loss due to the fiber splice, we can use the following formula for optical power loss: Loss (dB)=Power without splice (dBm)−Power with splice (dBm) = Loss=(−40.85dBm)−(−41.33dBm)=−40.85+41.33=0.48dB (as we comparing the 2 power levels) . Power without splice represents the signal power at the wavelength of interest (1308.831 nm) before the splice. Power with splice represents the signal power at the same wavelength after the splice is made. The loss is the difference between the two powers, and a positive value indicates a loss of signal strength due to the splice.

13. Remove the spliced fiber and place the original fiber. Make sure you put back the slide fiber in the proper protection bag in the drawing.
14. Change the attenuator and reduce (attenuate the power by 2 dB. Measure the peak WL power and briefly explain what happened.

Power of the Peak WL: __-42.89_____, Unit: _dBm_____

Our laser Source 8163A (input 1307 nm, P_{input} = 84.91dbm)we connect it to the attenuator input, the output enable port of attenuator connected to the switch port A1 then we selected the input A1 by pressing the shadowed button of switch, and the other port B1 to fiber loop and from fiber loop to the multi-wavelength meter 86120C. Again, we need to select the output of the switch port to B1 by using the shadowed button and arrow signs on it. And give the value of the attenuator by 2 dB. Before we put the attenuator 2 dB we measured the 0 dB attenuator corresponding power -40.85 dBm. And after putting the 2 dB attenuator we saw the power changed by 2dB which becomes -42.89dbm.
An attenuator reduces the signal power by a specified amount in decibels (dB). In our case, the 2 dB attenuator reduces the signal power by 2 dB.

Power with attenuation (dBm)=Power without attenuation (dBm)−Attenuation (dB)=
Power with 2 dB attenuation=−40.85dBm−2dB=−42.85dBm ,as the result we got -42.89 so we can say the attenuator successfully reduces the signal by 2 dB.

15. Calculate the Power of the Peak WL in mW:
    We get the peak wavelength power -42.89 dBm , so from dBm to mW is $10^{(-42.89\ \mathrm{dBm}/10)}$
    _____5.14×10^{-5}_____ mW

16. Change the attenuator and reduce (attenuate the power by 4 dB. Measure the peak WL power and briefly explain what happened.

Power of the Peak WL: _____-44.89_____, Unit: _____dBm_____

Our laser Source 8163A (input 1307 nm, P_{input} = 84.91dbm)we connect it to the attenuator input, the output enable port of attenuator connected to the switch port A1 then we selected the input A1 by pressing the shadowed button of switch, and the other port B1 to fiber loop and from fiber loop to the multi-wavelength meter 86120C. Again, we need to select the output of the switch port to B1 by using the shadowed button and arrow signs on it. And give the value of the attenuator by 4 dB. Before we put the attenuator 4 dB we measured the 0 dB attenuator corresponding power -40.85 dBm. And after putting the 4 dB attenuator we saw the power changed by 4dB which becomes -44.89dbm.
An attenuator reduces the signal power by a specified amount in decibels (dB). In our case, the **4** dB attenuator reduces the signal power by 4 dB.
Power with attenuation (dBm)=Power without attenuation (dBm)−Attenuation (dB)=
Power with 2 dB attenuation=−40.85dBm−4dB=−44.85dBm ,as the result we got -44.89 so we can say the attenuator successfully reduces the signal by 4 dB.

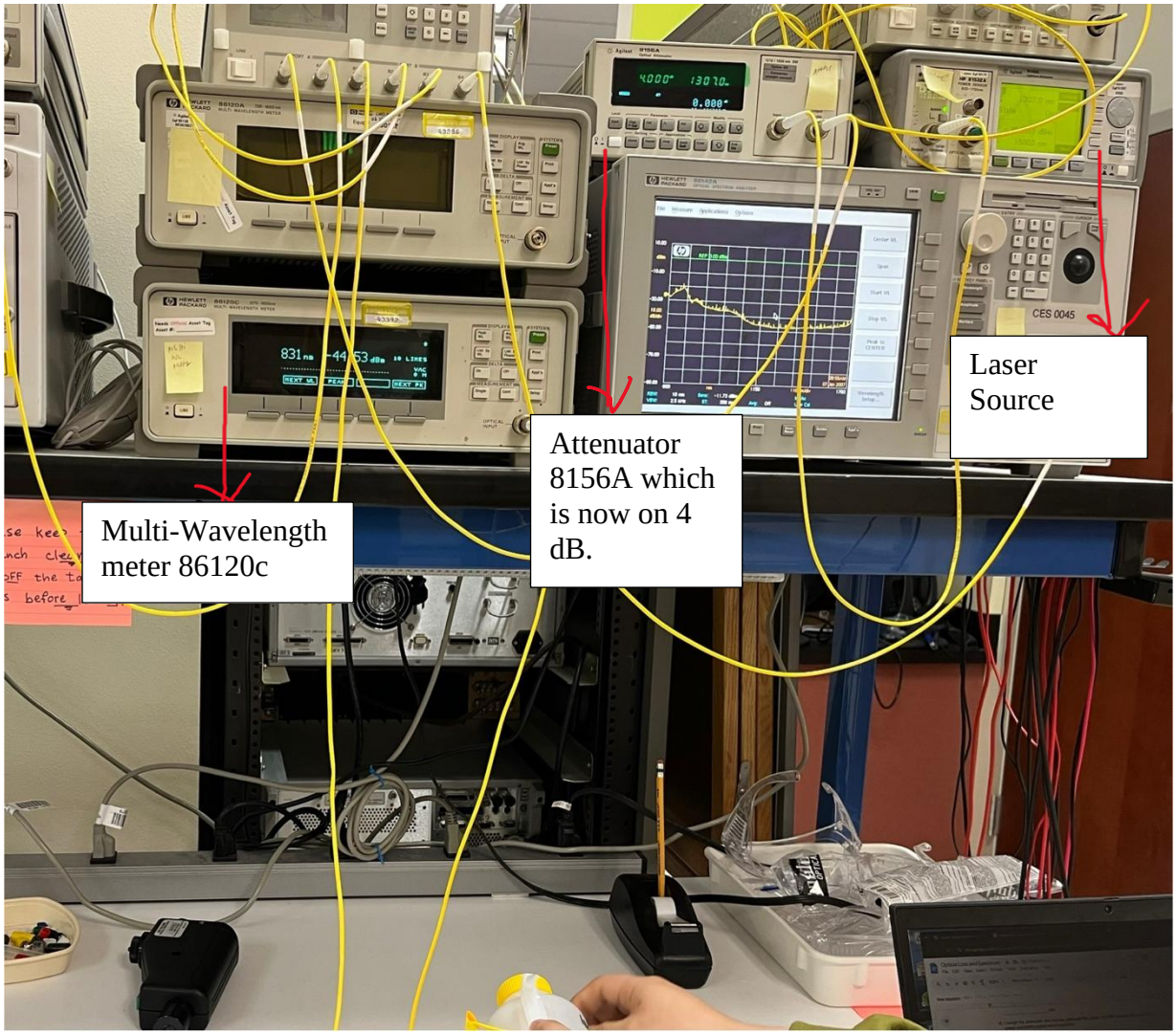

A picture of my measurement when the attenuator is in 4dB.

17. Calculate the Power of the Peak WL in mW:
    _____3.24×10^{-5}_____ mW

18. Using the cylindrical fixture on the bench **slightly and very gently bend** the fiber loop, that is connected to the panel. What type of attenuation do you experience? What is the diameter of the cylinder? What can you conclude here?

Peak WL: __1308.831 _____, Unit: ____nm_____
Diameter: _____7.5___, Unit: _cm_____

We use cylindrical fixture on the bench for gently bending the fiber loop, that is connected to

the panel and we can see the peak wavelength remains the same as 1308.831 nm but the power reduced to -44.56 dBm which is higher than the power we got from the regular position of fiber which is -40.85 dbm. This type of loss we say the extrinsic loss in the fiber, because we are bending the fiber meaning creating pressure on the fiber physically .

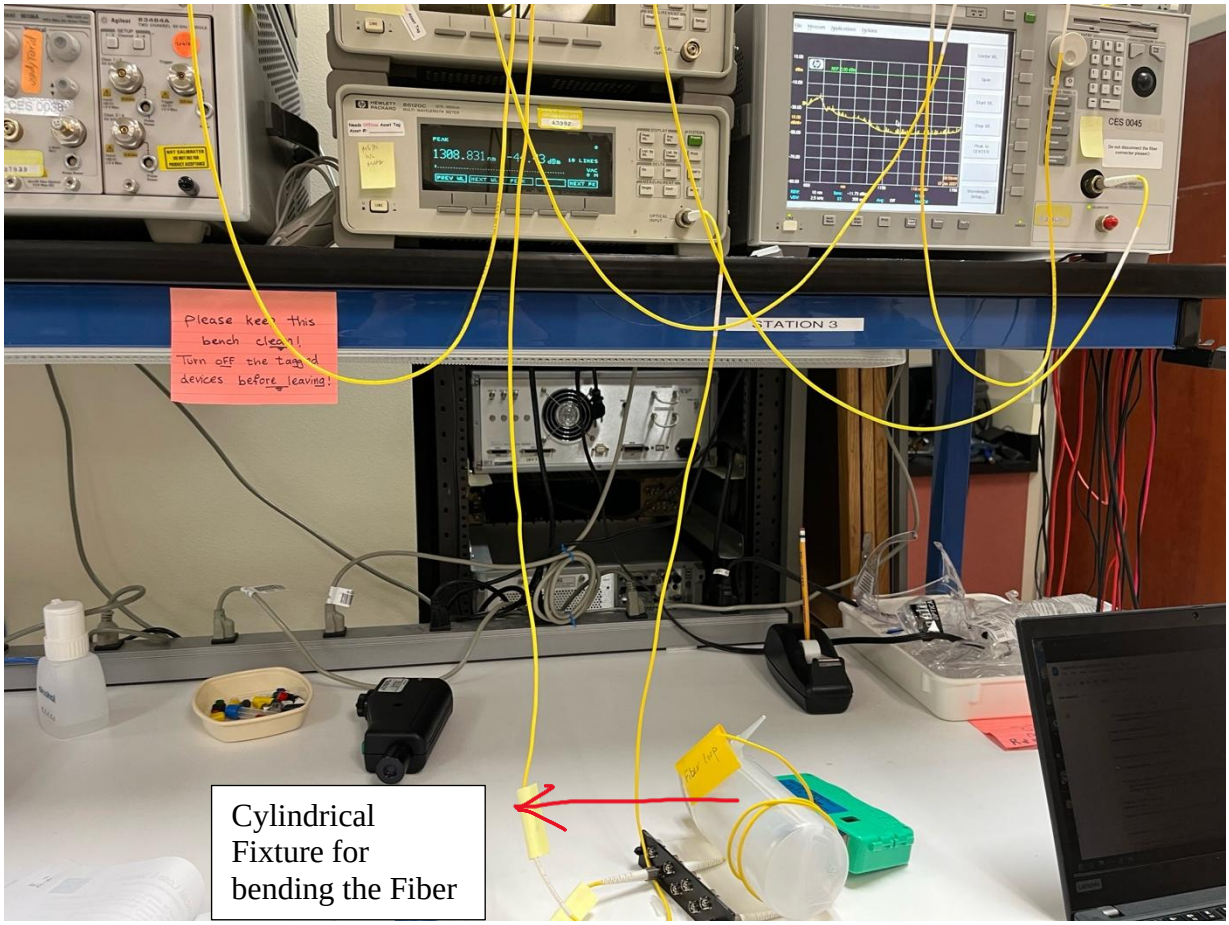

A picture showing the usage of a cylindrical fixture to bend the fiber.

19. Change the attenuation to 0.00 on the attenuator.
20. On the spectrum analyzer set the wavelength range from 1200 to 1400:
    a. Click on WL button → Start → 1200
    b. Click on WL button → Stop → 1400
21. Using the knob change the span and adjust the WL range so you can see your signal. Redor the following

Peak Wavelength ___1308.58_____, Unit ___nm_____
Power of the Peak Wavelength _____-15.27_____, Unit dBm_____

-3dB Wavelength (right) _____1308.98_____, Unit __nm_____
-3dB Wavelength (left) _____1306.94_____, Unit _____nm_____

Calculate the 3dB BW for the wavelength: __2.04_____, Unit ____nm_____

-20dB Wavelength (right) __1309.88_____, Unit _nm_____
-20dB Wavelength (left) _____1303.76____, Unit ___nm_____

Calculate the 20dB BW for the wavelength: ____6.12_____, Unit ____nm_____

Our laser Source 8163A (input 1307 nm, P_{input} = 84.91dbm)we connect it to the attenuator input, the output enable port of attenuator connected to the switch port A1 then we selected the input A1 by pressing the shadowed button of switch, and the other port B1 to fiber loop and from fiber loop to the multi-wavelength meter 86120C. Again, we need to select the output of the switch port to B1 by using the shadowed button and arrow signs on it. And now we change the output of the switch to B4 which is connected to the Spectrum Analyzer . Spectrum Analyzer is giving us the visual representation of how the wavelength looks like in a certain wave range, in our case it happens to be start 1200 nm and Stop – 1400 nm.

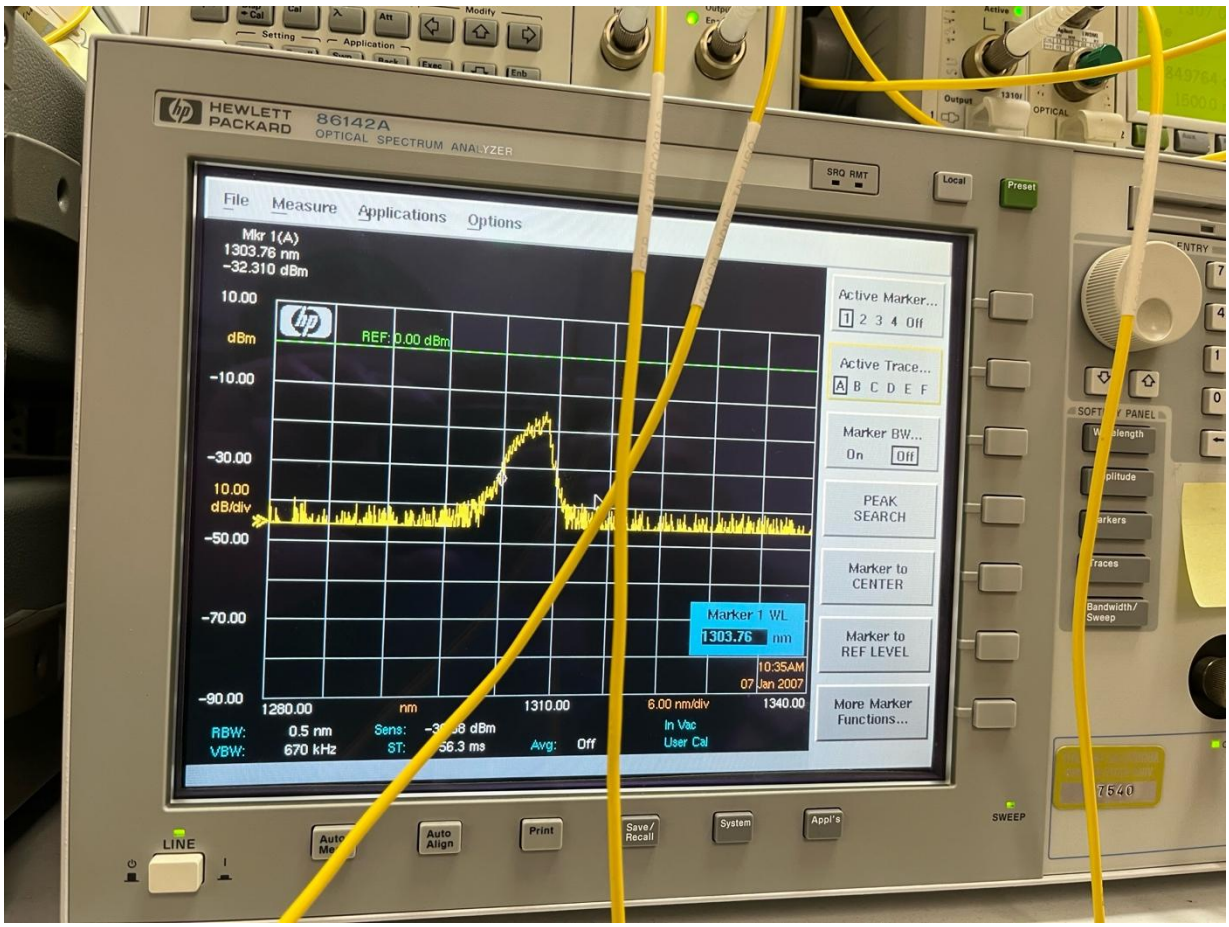

The above picture is showing the measurement we did for the -20dB wavelength (left) , the reason we are getting the -33.310dBm is because our center wavelength power was in -15.344 dbm and for getting the -20dBm we added the (-15.344-20)dBm = 35.344 dBm which is closer to 33.310 dbm .

Before you leave the bench, please make sure you clean the bend AND turn off all the devices with YELLOW tag.	Y/N
Did you clean the bench?	Y
Did you turn off the tagged equipment?	Y
Your Name here: Sabit Ahmed	

5. Conclusion

In two-three paragraphs in your own words explain what you learned in this lab. What was interesting? Each student must complete this section individually. DO NOT copy from each other!
Ans:

During the experiment, I had the opportunity to observe the entire system setup and see how the components interact with one another. I learned a great deal about the different parts, such as the laser sources and optical switches. The optical switches, which function similarly to mirrors, change the direction of the light, redirecting it from one path to another. The system had two inputs, A1 and A2, and two outputs: B1, which went to the fiber loop, and B4, connected to the spectral analyzer. Initially, when I thought of a spectral analyzer, I assumed it was related to frequency analysis, but I quickly realized that it deals with wavelengths. A significant moment of confusion for me was understanding the relationship between wavelength and power. At first, I assumed that as wavelength increases, power would decrease due to the decrease in energy. However, I learned that this isn't necessarily the case. The power depends on both the energy of individual photons and the number of photons emitted. For example, a light source can emit high-energy (short wavelength) photons at a low rate, or low-energy (long wavelength) photons at a high rate, and the total power output can remain the same.

Working with the instruments for the first time also presented challenges. Initially, I was unsure how to correctly connect the fiber loop. I made the mistake of not checking the key on the panel, which caused me to get no output. Fortunately, my partner showed me the proper way to connect it, and I quickly corrected the setup. For the spectral analyzer, we were attempting to measure the -3 dB and -20 dB points, but we initially selected the wrong marker (Marker 1). Once we discovered that Marker 2 was the correct option, we were able to properly observe the power levels at those points.

Overall, the experiment was a fun and insightful experience. It provided me with a deeper understanding of how fiber-optic systems operate and how various components interact to measure and analyze optical signals.

6. Survey

Please complete the following survey:

https://docs.google.com/forms/d/e/1FAIpQLSeF0i-r_iDFfqD6Sixo4BbqqX_2rfc1jIqtmURgVxfvJGwpDw/viewform?usp=sharing