SC ROBOTICS

EST. 2018

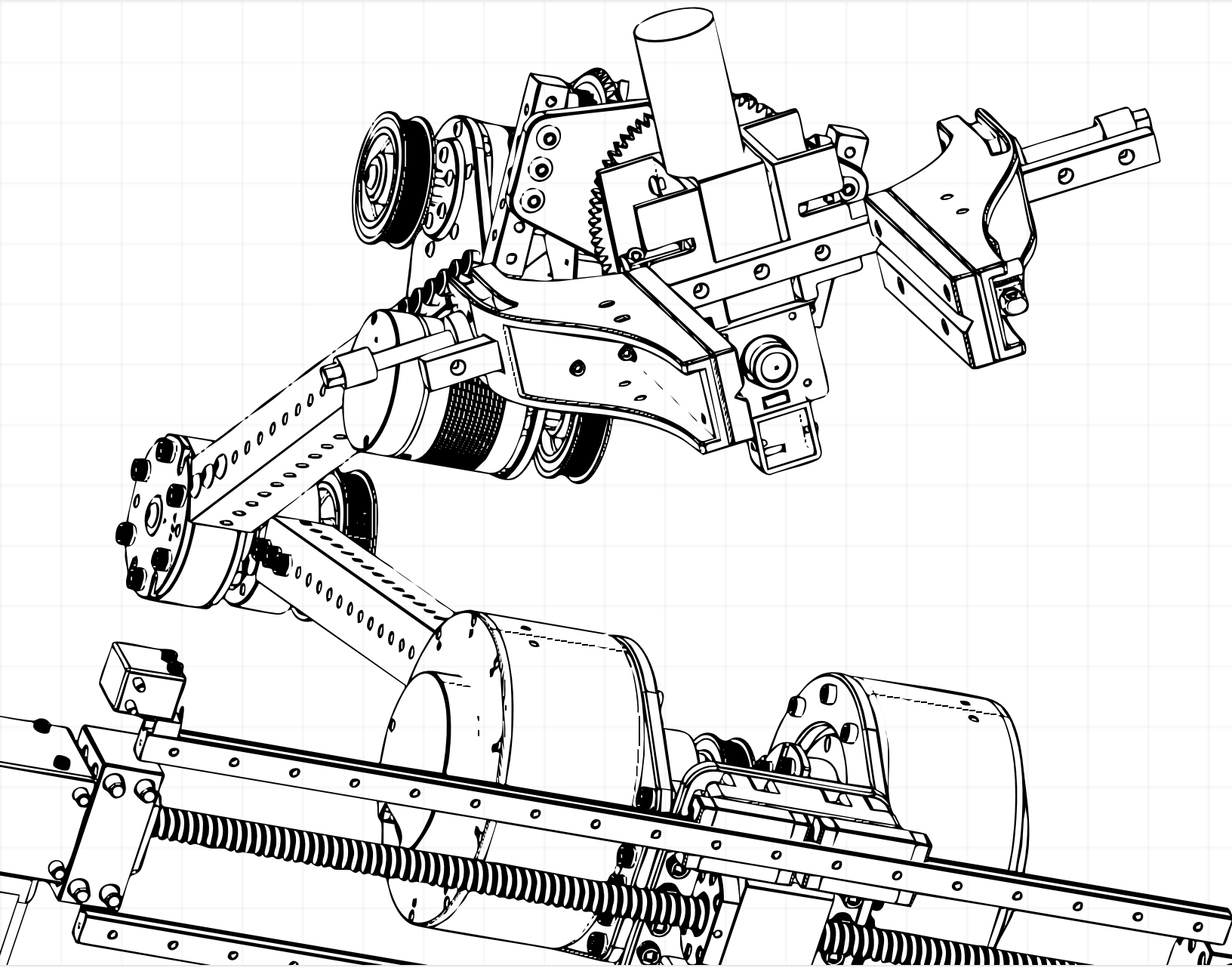

REACH FURTHER.

University Rover Challenge

OPEN TO

All Saddleback & IVC Students

SADDLEBACKCOLLEGEROBOTICS.COM