SC ROBOTICS

UNIVERSITY ROVER CHALLENGE · EST. 2018

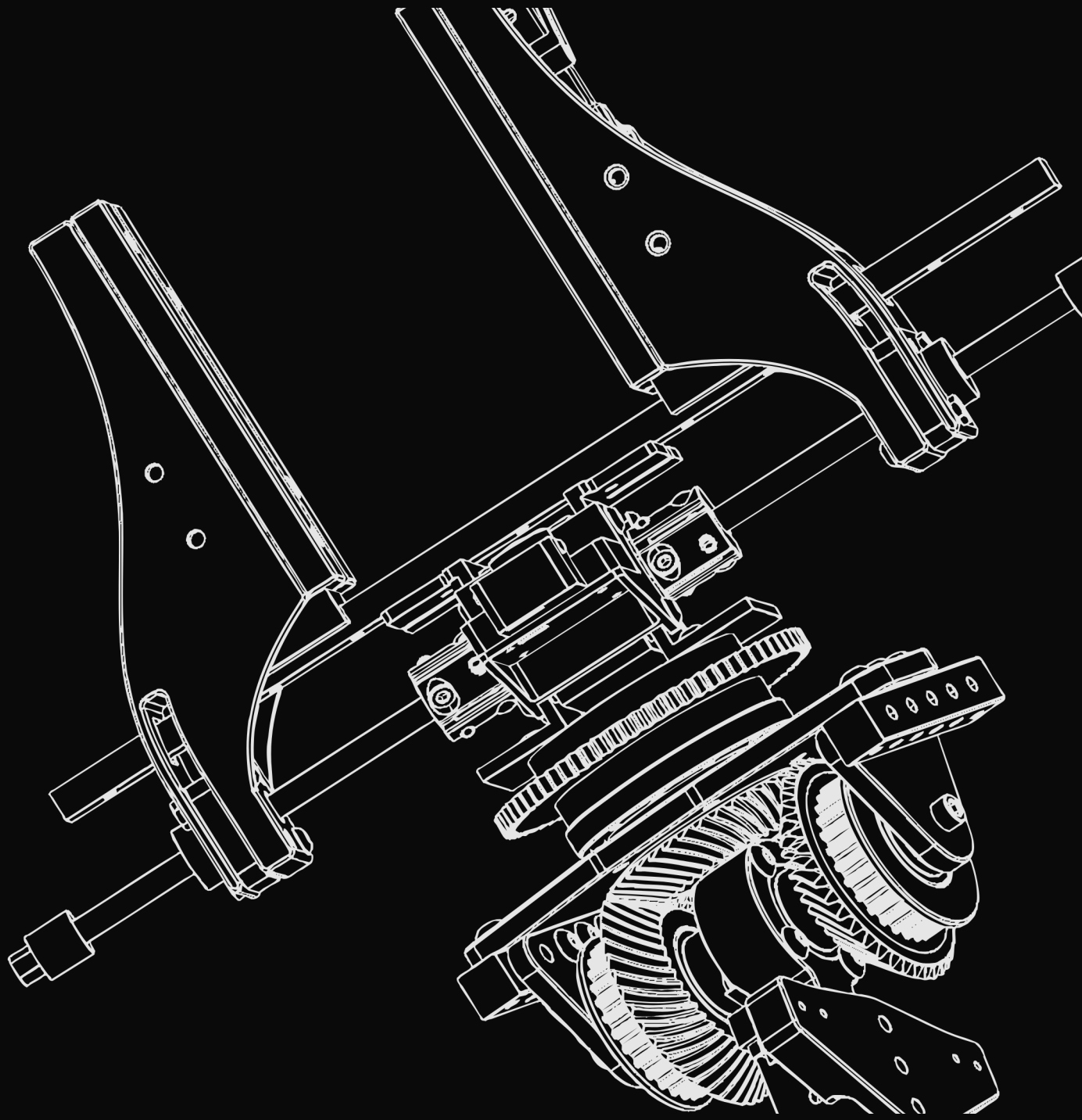

GRIPPYY!

DISCORD

discord.gg/USzmfYwAUa

PART

26-ARM-END_EFFECTOR

WEBSITE