SC ROBOTICS

EST. 2018

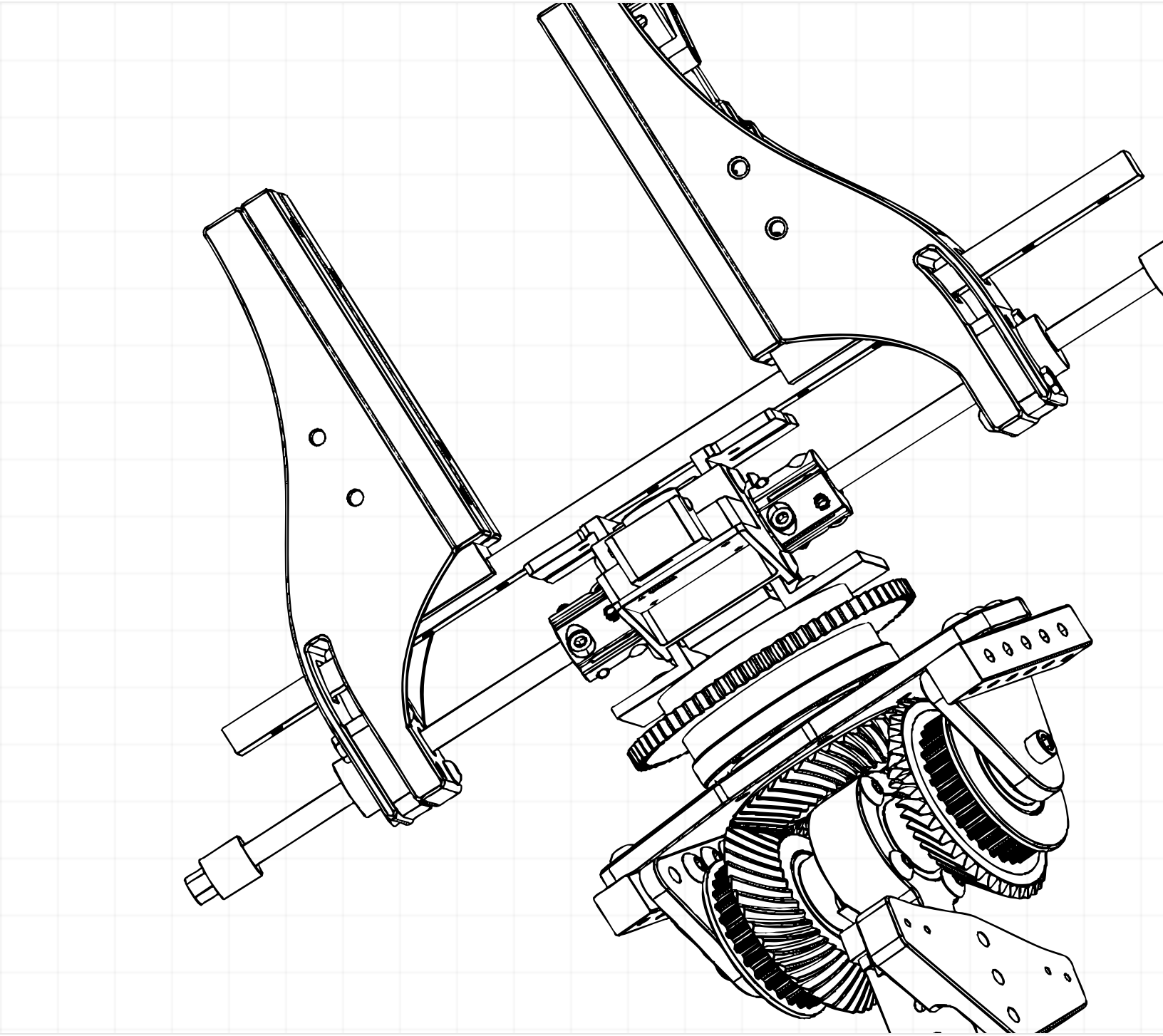

GRIPPYY!

University Rover Challenge

PART

26-ARM-END_EFFECTOR

SADDLEBACKCOLLEGEROBOTICS.COM