SC ROBOTICS

EST. 2018

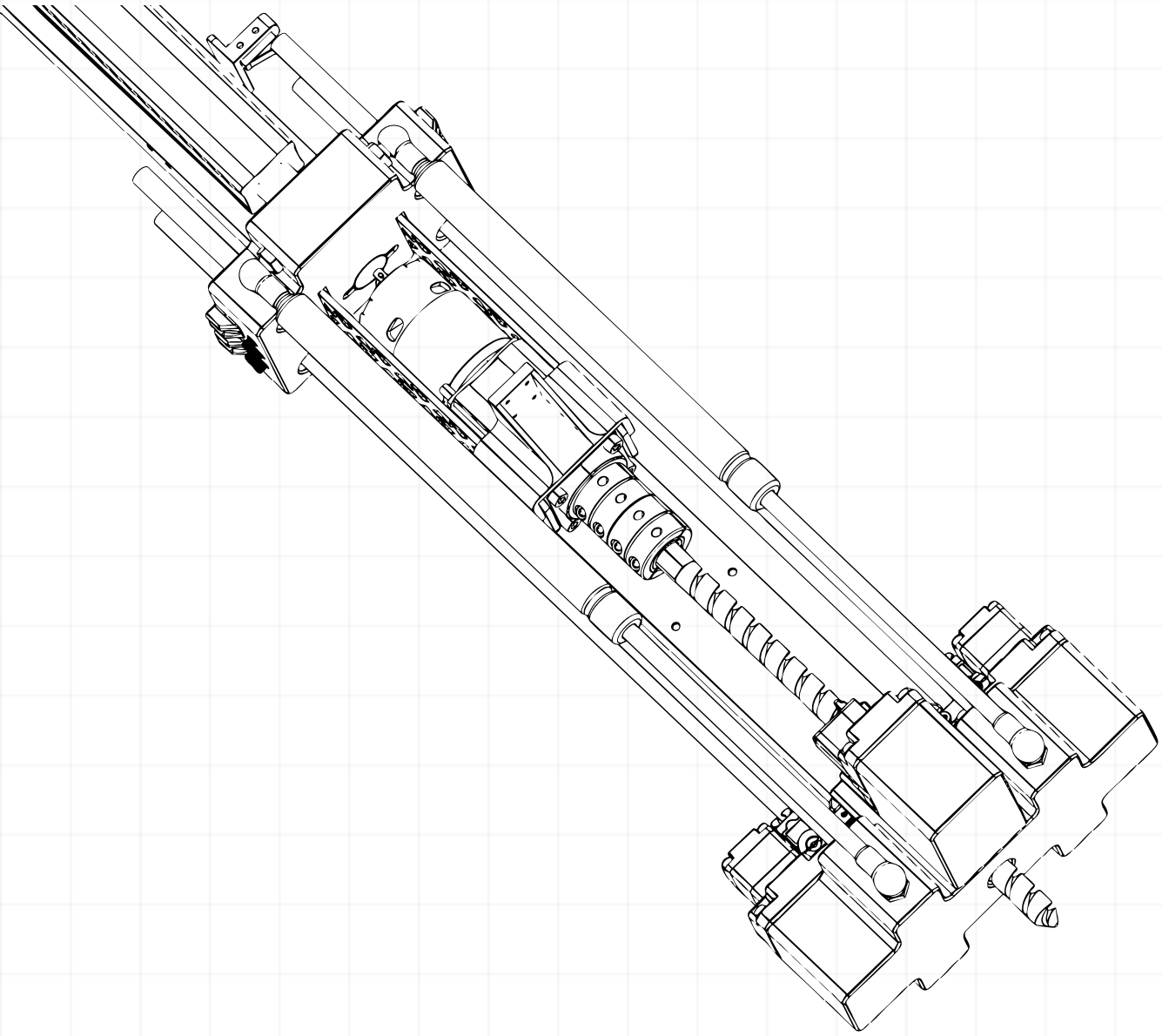

26-SCI-COL-A001

SCIENCE COLLECTION SYSTEM

DIG DEEPER.

University Rover Challenge

OPEN TO

All Saddleback & IVC Students

SADDLEBACKCOLLEGEROBOTICS.COM