SC ROBOTICS

SADDLEBACK COLLEGE ROBOTICS

UNIVERSITY ROVER CHALLENGE · EST. 2018

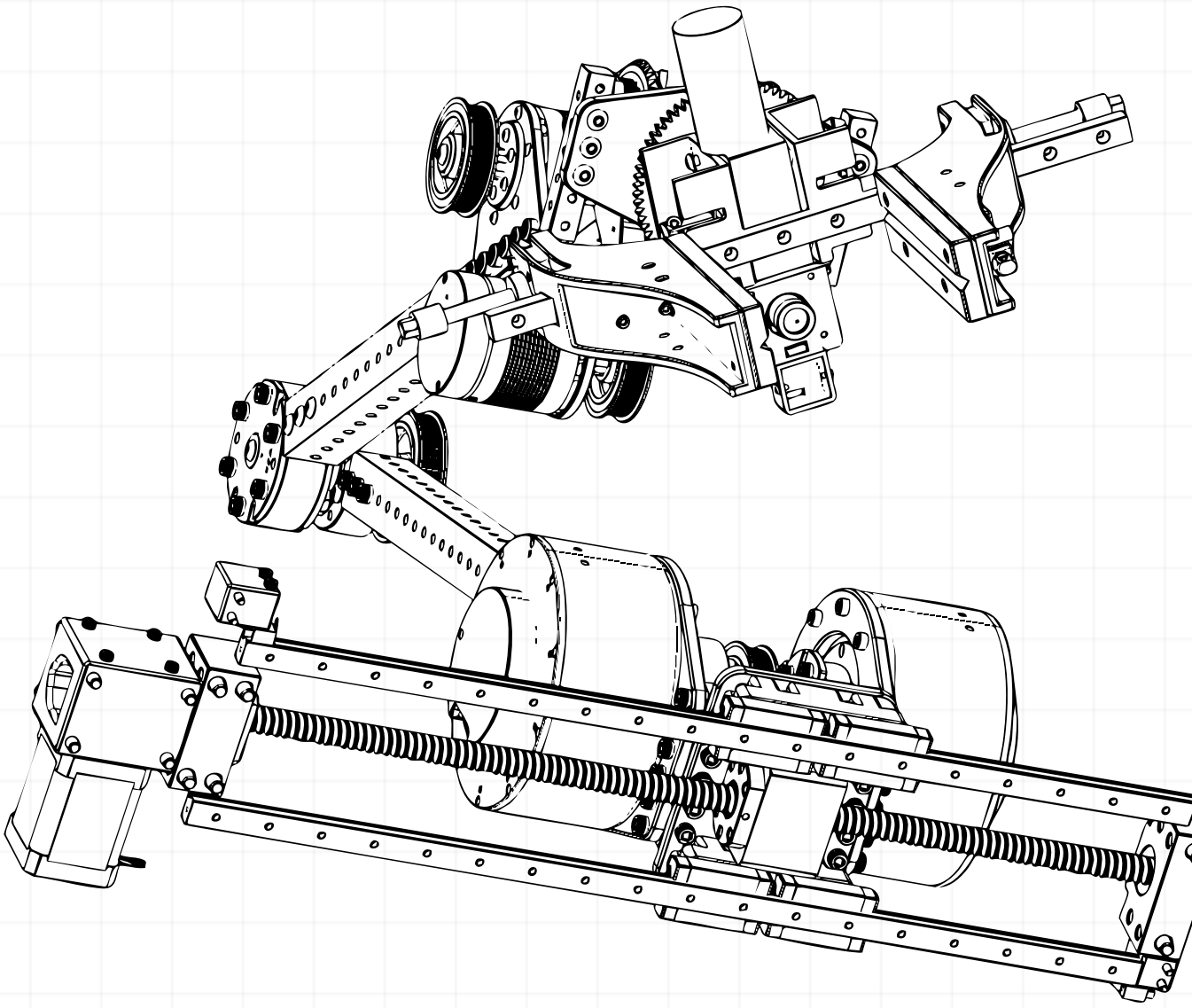

REACH FURTHER.

DISCORD

discord.gg/USzmfYwAUa

OPEN TO

All Saddleback Students

WEBSITE