Sri Lanka Institute of Information Technology

Faculty of Computing

Differentiation

Ms.Nilushi Dias

Year 01 and Semester 01

The Gradient of a Straight-Line Graph

- The gradient of the sloping straight line in the figure is defined as

$$\frac{\text{the vertical distance the line rises and falls between the two points P and Q}}{\text{the horizontal distance between P and Q}}$$

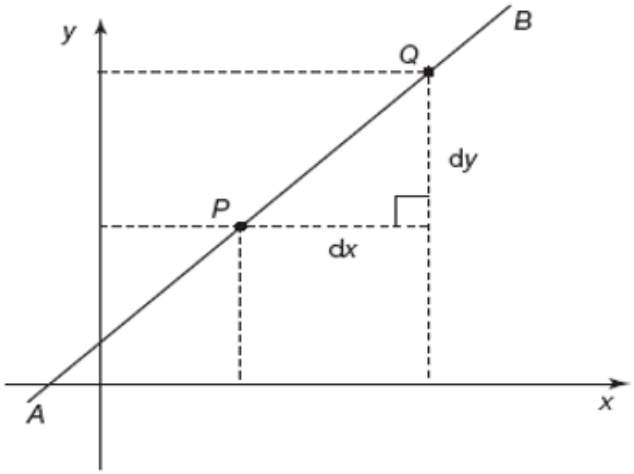

The gradient of a straight-line graph

- The gradient of the sloping straight line in the figure is given as:

$$\frac{dy}{dx} \text{ and its value is denoted by the symbol } m$$

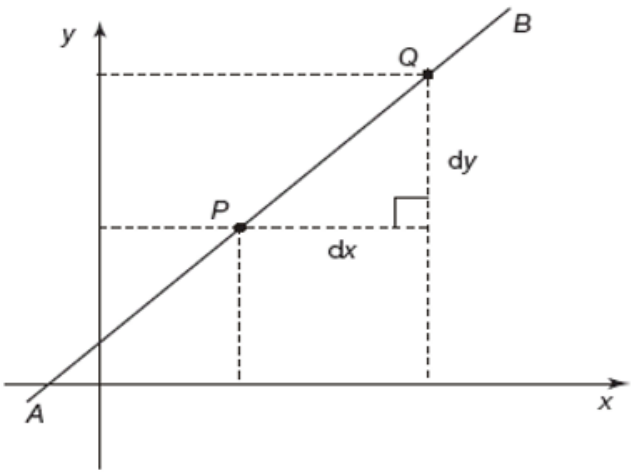

The Gradient of a Curve at a Given Point

- If we take two points P and Q on a curve and calculate, as we did for the straight line, the ratio of the vertical distance the curve rises or falls and the horizontal distance between P and Q the result will depend on the points chosen:

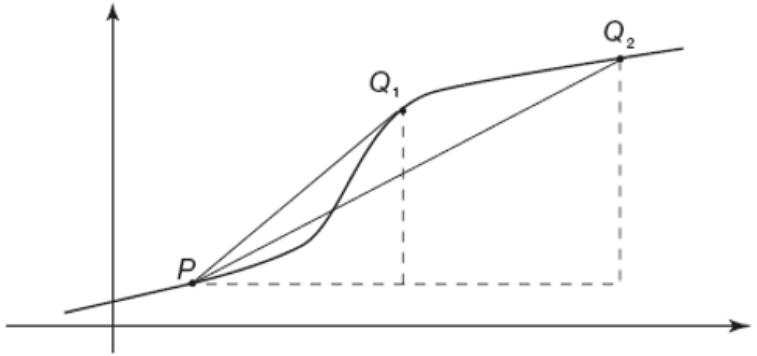

The gradient of a curve at a given point

- The result depends on the points chosen because the gradient of the curve varies along its length. Because of this the gradient of a curve is not defined between two points as in the case of a straight line but at a single point.

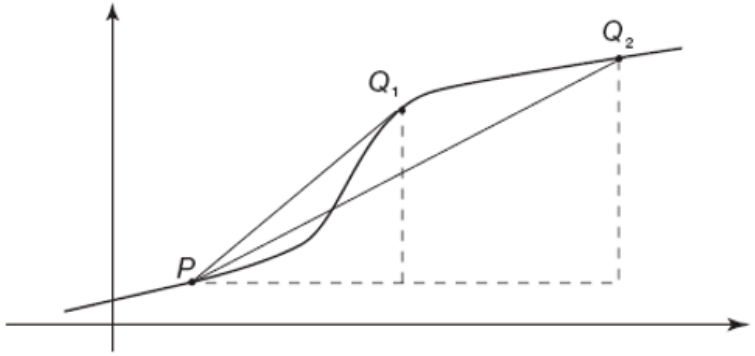

The gradient of a curve at a given point

- The gradient of a curve at a point P is defined to be the gradient of the tangent at that point:

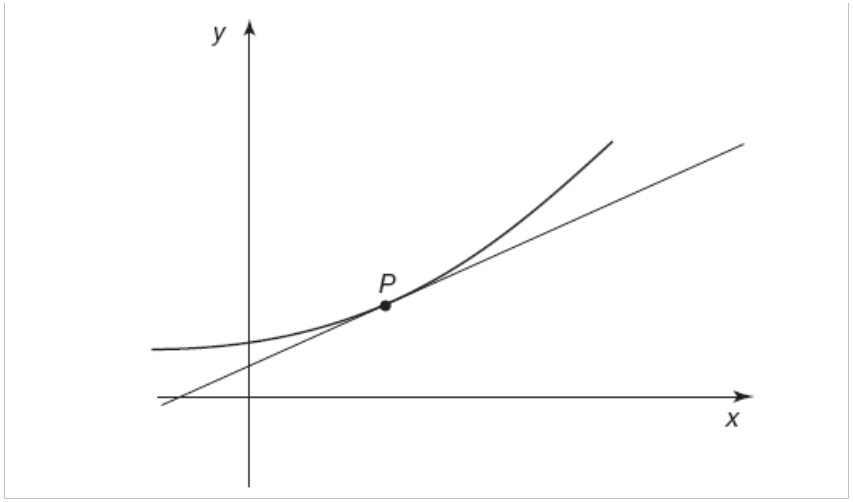

Algebraic determination of the gradient of a curve

The gradient of the chord PQ is $\dfrac{\delta y}{\delta x}$ and the gradient of the tangent at P is $\dfrac{dy}{dx}$

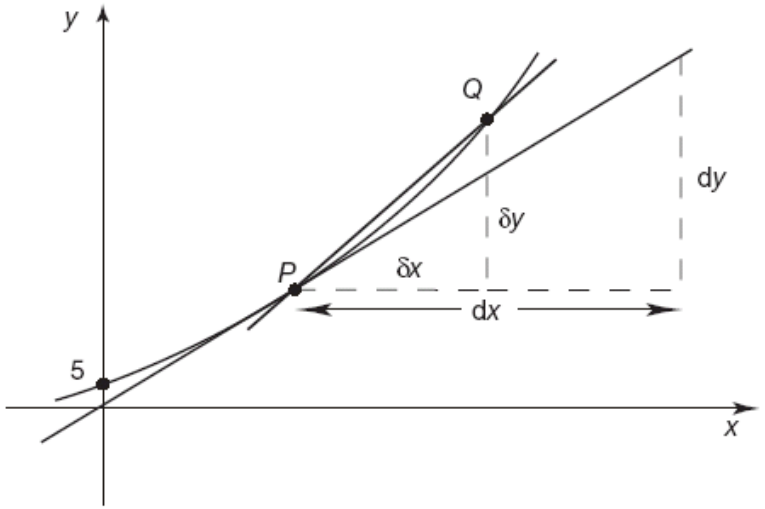

Algebraic determination of the gradient of a curve

- As Q moves to P so the chord rotates. When Q reaches P the chord is coincident with the tangent.
- For example, consider the graph of $y = 2x^2 + 5$

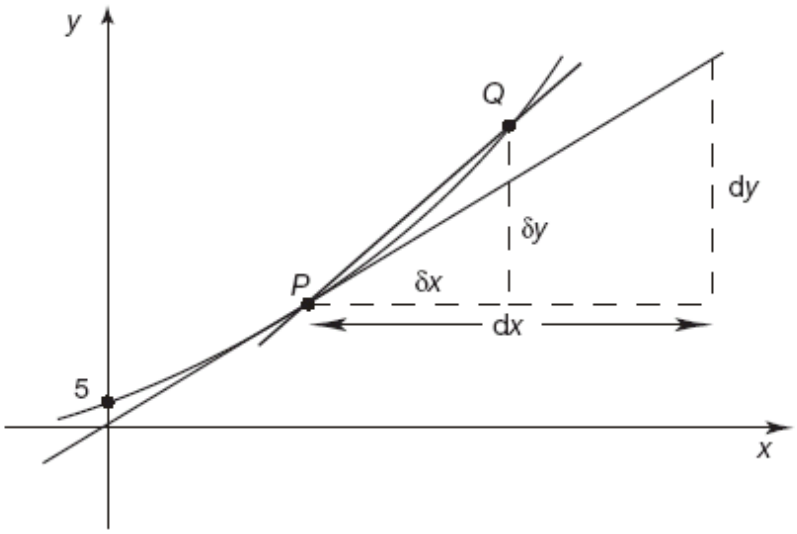

Algebraic determination of the gradient of a curve

At Q: $$y+\delta y = 2(x+\delta x)^2 + 5$$

So $$= 2x^2 + 4x.\delta x + 2[\delta x]^2 + 5$$

As $$\delta y = 4x.\delta x + 2[\delta x]^2 \quad \text{and} \quad \frac{\delta y}{\delta x} = 4x + 2.\delta x$$

$$\delta x \to 0 \text{ so } \frac{\delta y}{\delta x} \to \text{ the gradient of the tangent at } P = \frac{dy}{dx}$$

Therefore

$$\boxed{\frac{dy}{dx} = 4x}$$

called *the derivative of y with respect to x.*

Derivatives of powers of x

- Two straight lines
- Two curves

Derivatives of powers of x

Two straight lines

(a) $y = c$ (constant)

$dy = 0$ therefore $\boxed{\dfrac{dy}{dx} = 0}$

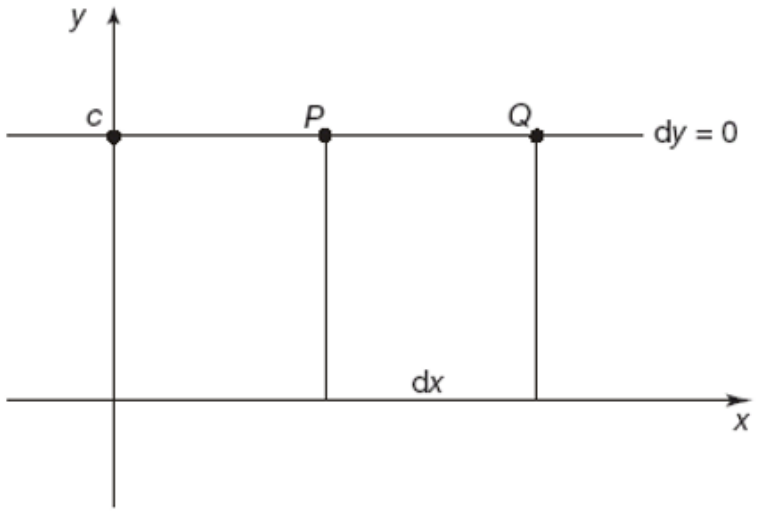

Derivatives of powers of x

Two straight lines

(b) $y = ax$

$$y + dy = a(x + dx)$$

$$dy = a.dx \quad \text{therefore} \quad \boxed{\frac{dy}{dx} = a}$$

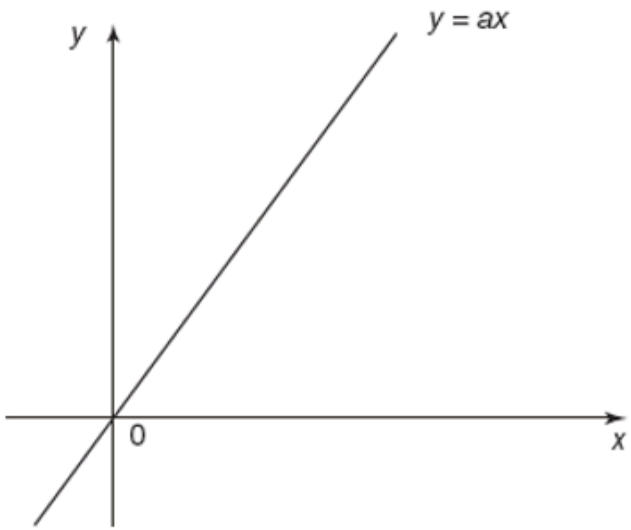

Derivatives of powers of x

Two curves

(a) $y = x^2$

$$y + \delta y = (x + \delta x)^2$$

so

$$\delta y = 2x.\delta x + [\delta x]^2 \text{ therefore } \frac{\delta y}{\delta x} = 2x + \delta x$$

therefore $\boxed{\dfrac{dy}{dx} = 2x}$

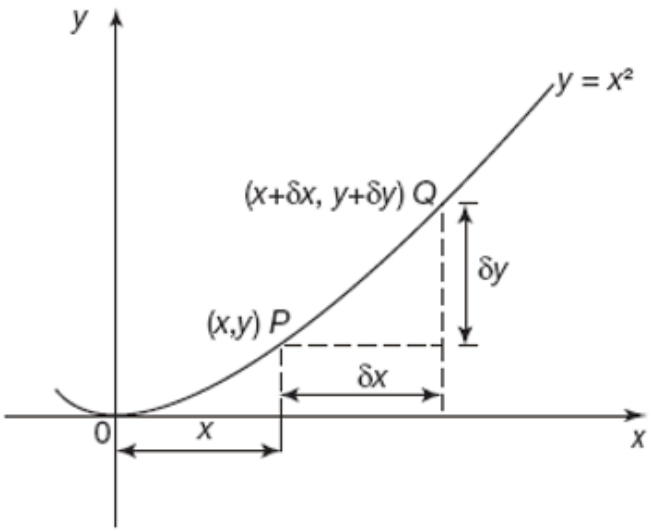

Derivatives of powers of x

Two curves

(b) $y = x^3$

$$y + \delta y = (x + \delta x)^3$$

so

$$\delta y = 3x^2.\delta x + 3x.[\delta x]^2 + [\delta x]^3$$

therefore $\dfrac{\delta y}{\delta x} = 3x^2 + 3x.\delta x + [\delta x]^2$

therefore $\boxed{\dfrac{dy}{dx} = 3x^2}$

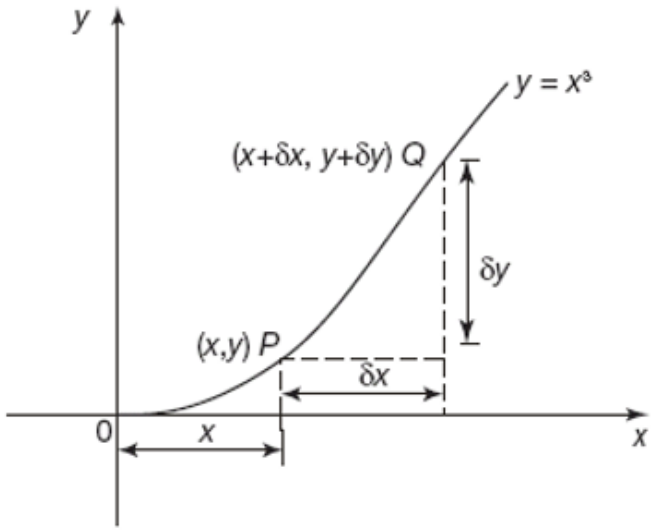

Derivatives of powers of x

- A clear pattern is emerging:

y	$\frac{dy}{dx}$
c	0
x	1
x^2	$2x$
x^3	$3x^2$
x^4	$4x^3$
x^5	$5x^4$

$$\text{If } y = x^n \text{ then } \frac{dy}{dx} = nx^{n-1}$$

Differentiation of polynomials

- To differentiate a polynomial, we differentiate each term in turn:

$$\text{If } y = x^4 + 5x^3 - 4x^2 + 7x - 2$$

$$\text{then } \frac{dy}{dx} = 4x^3 + 5 \times 3x^2 - 4 \times 2x + 7 \times 1 - 0$$

$$\text{Therefore } \frac{dy}{dx} = 4x^3 + 15x^2 - 8x + 7$$

Derivatives – an alternative notation

- The double statement:

$$\text{If } y = x^4 + 5x^3 - 4x^2 + 7x - 2$$

$$\text{then } \frac{dy}{dx} = 4x^3 + 5 \times 3x^2 - 4 \times 2x + 7 \times 1 - 0$$

- can be written as

$$\frac{d}{dx}\left(x^4 + 5x^3 - 4x^2 + 7x - 2\right) = 4x^3 + 15x^2 - 8x + 7$$

Derivatives – an alternative notation

- The derivative of the derivative of y is called the second derivative of y and is written as:

$$\frac{d}{dx}\left(\frac{dy}{dx}\right)=\frac{d^2y}{dx^2}$$

So, if:

$$y=x^4+5x^3-4x^2+7x-2$$

$$\frac{dy}{dx}=4x^3+15x^2-8x+7$$

then

$$\frac{d^2y}{dx^2}=12x^2+30x-8$$

Standard derivatives and rules

Standard derivatives

- The table of standard derivatives can be extended to include trigonometric and the exponential functions:

$$\frac{d}{dx}\left(\sin x\right) = \cos x$$

$$\frac{d}{dx}\left(\cos x\right) = -\sin x$$

$$\frac{d}{dx}\left(e^{x}\right) = e^{x}$$

Differentiation of products of functions

- Given the product of functions of x:

$$y = uv$$

then:

$$\boxed{\frac{dy}{dx} = u\frac{dv}{dx} + v\frac{du}{dx}}$$

- This is called the product rule.

Differentiation of a quotient of two functions

- Given the quotient of functions of x:

$$y = \frac{u}{v}$$

then:

$$\boxed{\frac{dy}{dx} = \frac{v\frac{du}{dx} - u\frac{dv}{dx}}{v^2}}$$

- This is called the quotient rule.

Functions of a function

Differentiation of a function of a function

- To differentiate a function of a function we employ the chain rule.
- If y is a function of u which is itself a function of x so that:

$$y(x) = y(u[x])$$

Then:

$$\frac{dy}{dx} = \frac{dy}{du} \cdot \frac{du}{dx}$$

- This is called the chain rule.

Functions of a function

Differentiation of a function of a function

- Many functions of a function can be differentiated at sight by a slight modification to the list of standard derivatives:

F is a function of x			
y	$\frac{dy}{dx}$	y	$\frac{dy}{dx}$
F^n	$nF^{n-1}.\frac{dF}{dx}$	$\cos F$	$-\sin F.\frac{dF}{dx}$
$a.F^n$	$a.nF^{n-1}.\frac{dF}{dx}$	$\tan F$	$\sec^2 F.\frac{dF}{dx}$
$\sin F$	$\cos F.\frac{dF}{dx}$	e^F	$e^F.\frac{dF}{dx}$

Thank You!