Assessing Neural Network Workloads on Multicore Quantum Architectures

Sadit Joarder, Daniel Kotlyar, Rahaf Al Ostwani, Justin Dang, Ethan Wong, Seham Al Abdul Wahid, Farah Mohammadi, Arghavan Asad

Department of Electrical, Computer, and Biomedical Engineering, Toronto Metropolitan University

Toronto Metropolitan University

Introduction

20 Million
Qubits to break 2048-bit encryption key in 8 hours

1 Thousand
Qubits in IBM's Condor

- **The Problem:** The current Noisy Intermediate-Scale Quantum (NISQ) era suffers from high noise and a limited number of qubits
- **The Solution:** Distributed Quantum Computing (DQC) using a Quantum Network-on-Chip (QNoC) design can scale up available qubits

Objectives

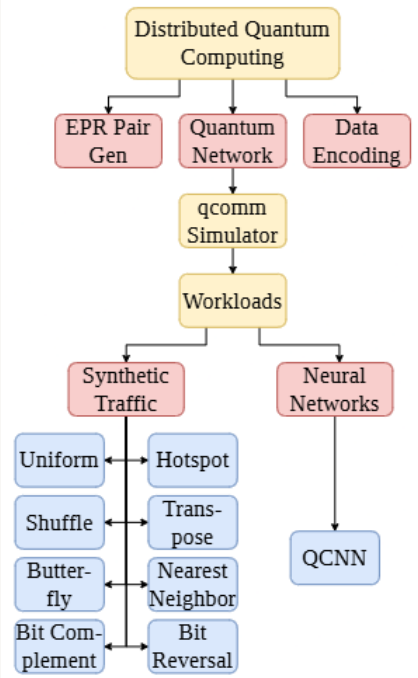

- **Goal:** Evaluate scalability trade-offs of 8 synthetic traffic patterns and Quantum Convolutional Neural Network (QCNN) workloads on a QNoC
- **Significance:** Improving efficiency for massive computational tasks, such as training Large Language Models (LLMs), which currently require millions of qubits

Methodology

Architecture

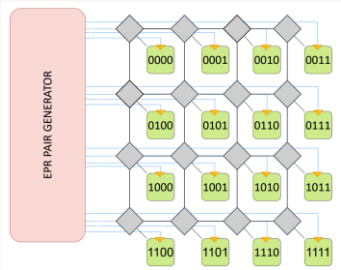

NoC Topology: 4x4 2D Mesh
Qubits Per Core: 10
Routing Algorithm: XY
LTM Ports Per Core: 2
Link Width: 8 bits
Mapping: Sequential/Random
Simulator: qcomm

Stress Testing Synthetic Traffic

- **Zero Bottleneck:** Default parameter settings in qcomm
- **Classical Bottleneck:** Quantum parameters improved by 20x
- **Quantum Bottleneck:** Classical parameters improved by 20x
- Swept simulations from 200 to 1000 quantum gates

QCNN on Mesh vs. Monolithic Platform

- Compared under usage of **NoC** and **wireless NoC (WiNoC)**
- Swept simulations from 1x1 to 10x10 input sizes
- Circuit built in Python using IBM's QCNN layers and Qiskit's ZFeatureMap for encoding

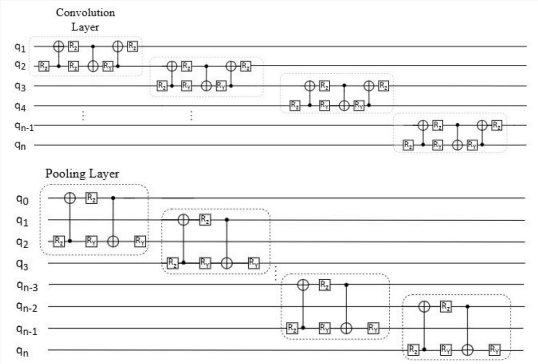

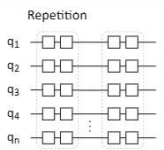

Results

Butterfly Is Best and Hotspot Scales

LTM Ports Make QCNN Better on WiNoC

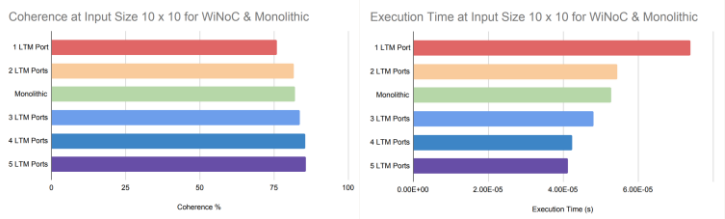

1.45% higher
qubit coherence

8.91% faster
execution time

Conclusion

- **DQC is a viable** path for running heavy **neural network** workloads in the NISQ era
- Standard mesh networks bottleneck machine learning traffic, but **WiNoC** provides the necessary low-latency shortcuts to **make QCNNs feasible**
- Development of specialized **routing protocols** that optimize for localized traffic and integrate hybrid wired/wireless quantum **interconnects**

Link to GitHub repository, paper, and references.