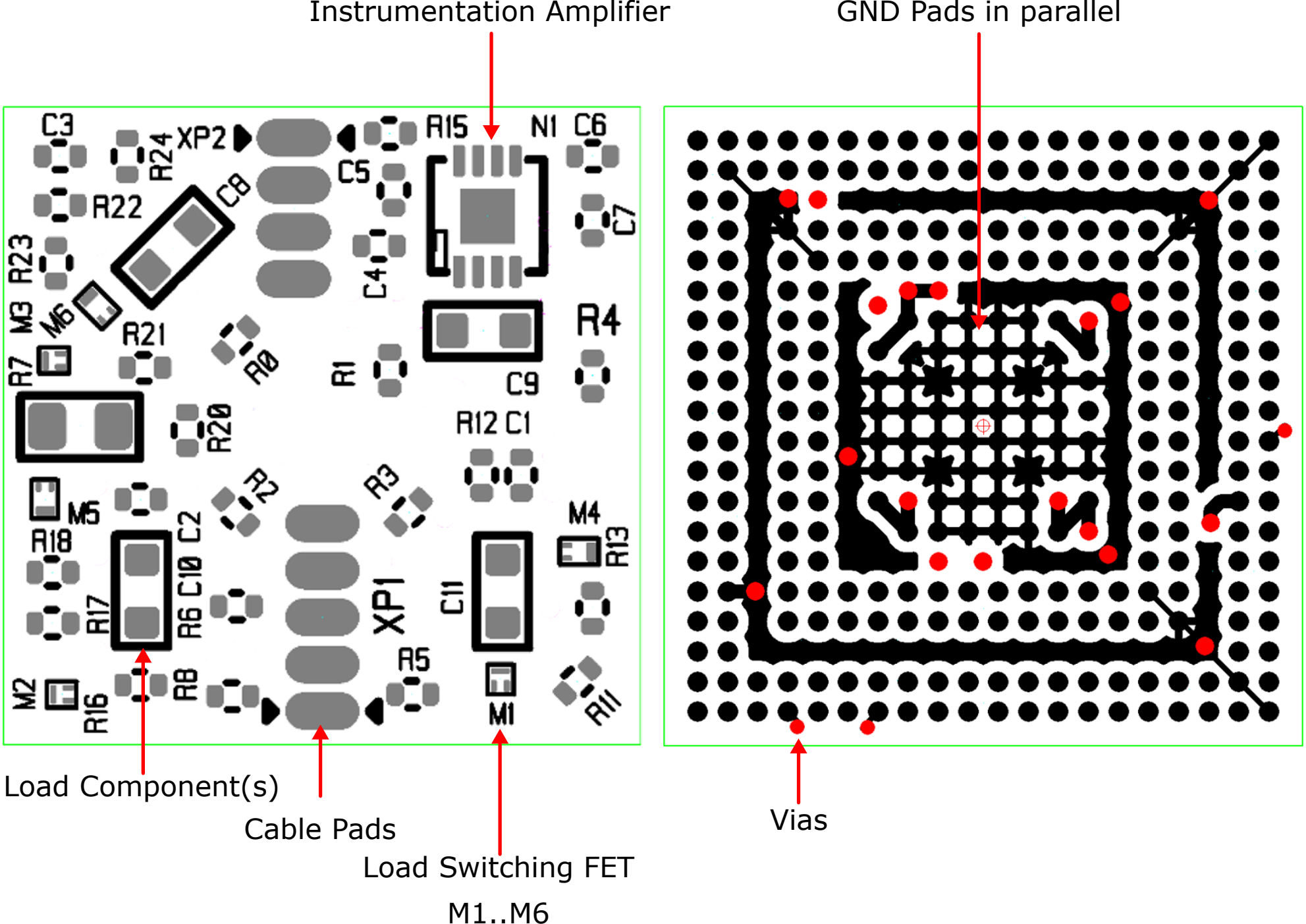
Instrumentation Amplifier
GND Pads in parallel
C3
R24
XP2
R15
N1
C6
C5
C8
R22
C7
R23
C4
M3
M6
R4
R21
R0
R7
R1
C9
R20
R12
C1
R2
R3
M5
M4
R18
C2
R13
R17
R6
C10
XP1
C11
R5
M2
R8
M1
R11
R16
Load Component(s)
Cable Pads
Load Switching FET
M1..M6
Vias