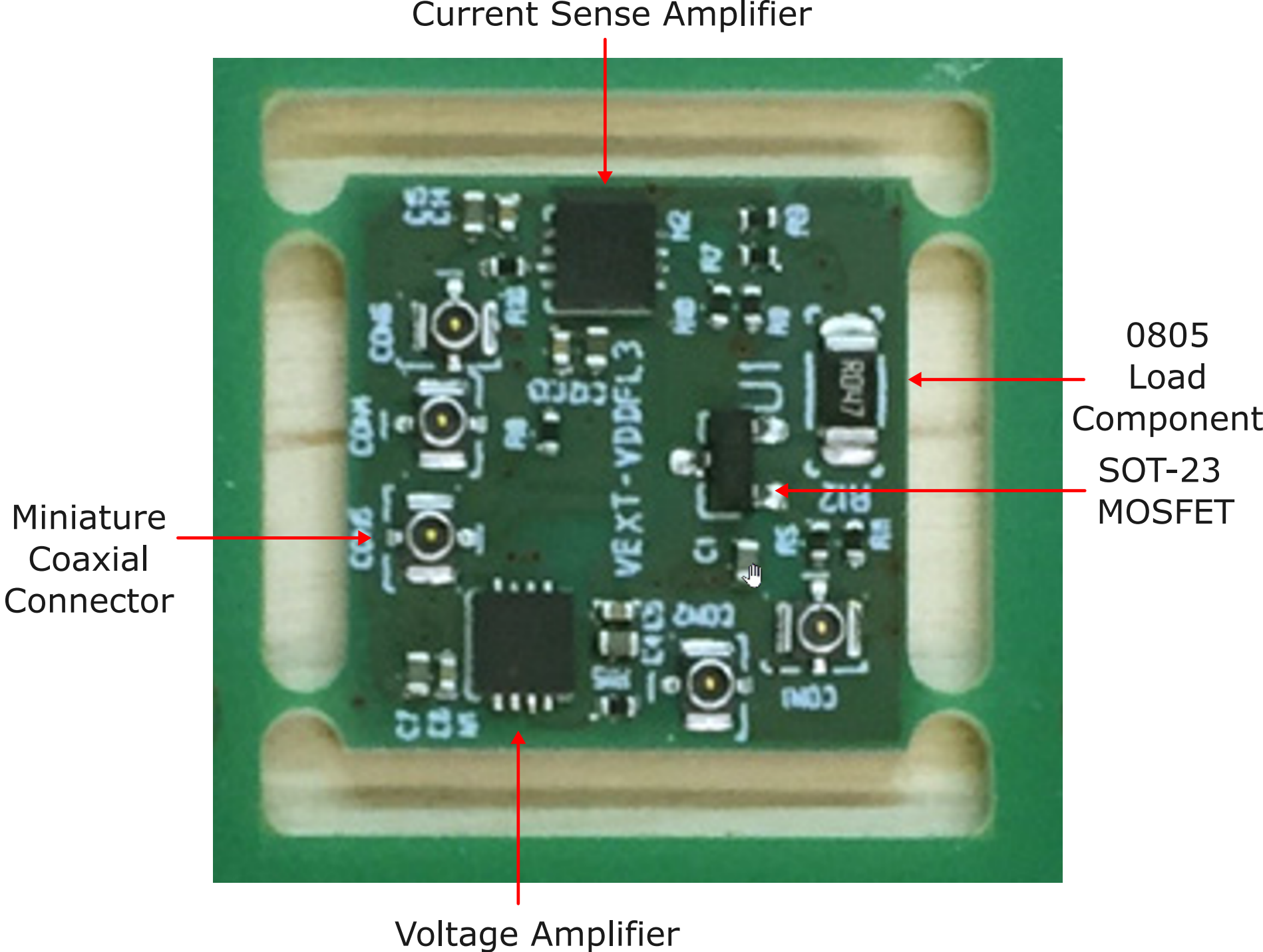
Current Sense Amplifier
0805
Load
Component
SOT-23
MOSFET
Miniature
Coaxial
Connector
Voltage Amplifier