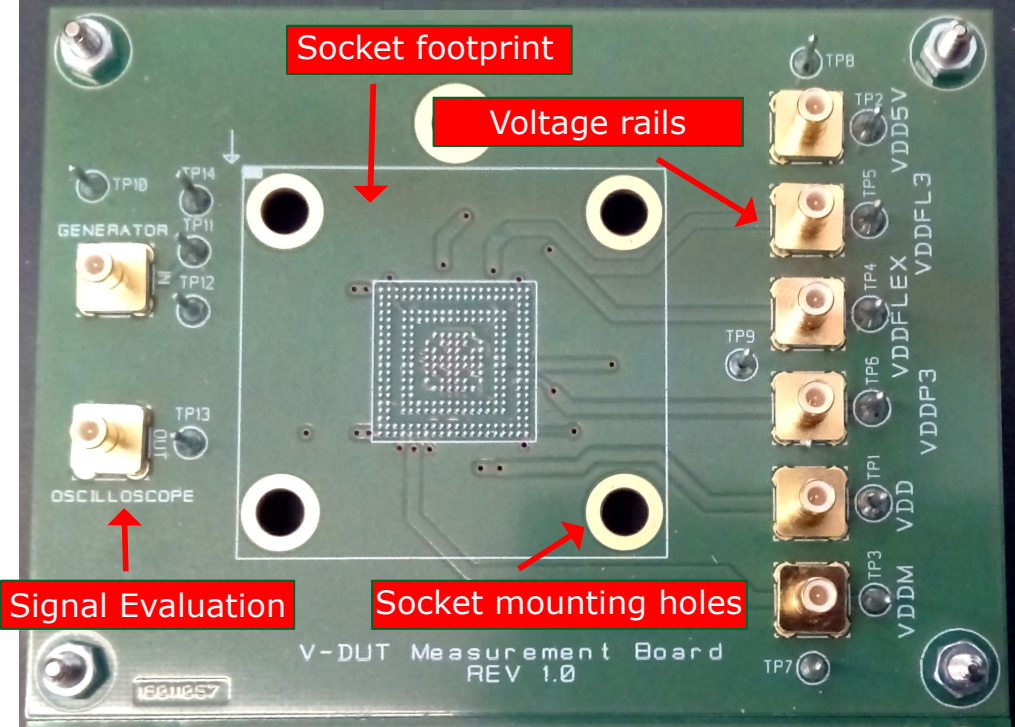
Socket footprint
Voltage rails
Signal Evaluation
Socket mounting holes
TP8
TP2
VDD5V
TP5
VDDFL3
TP4
VDDFLEX
TP9
TP6
VDDP3
TP1
VDD
TP3
VDDM
TP7
TP10
TP14
GENERATOR
TP11
IN
TP12
TP13
OUT
OSCILLOSCOPE
V-DUT Measurement Board
REV 1.0