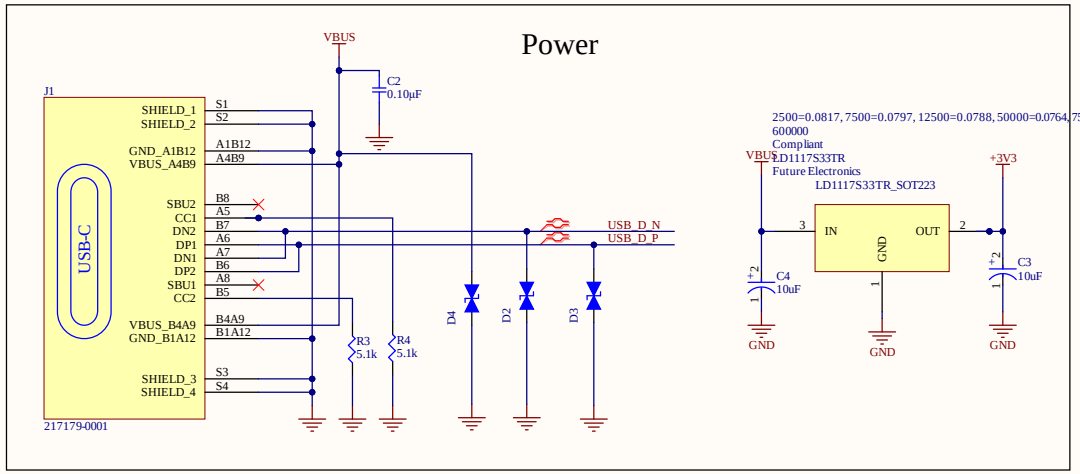

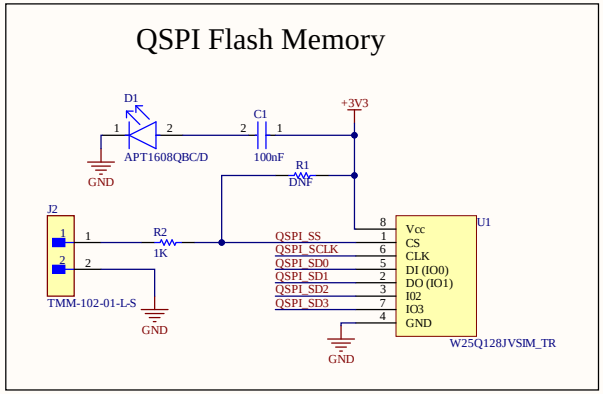

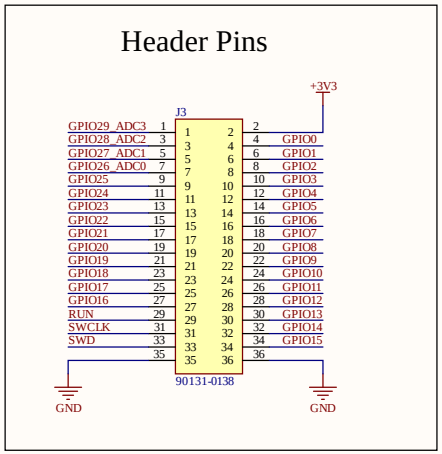

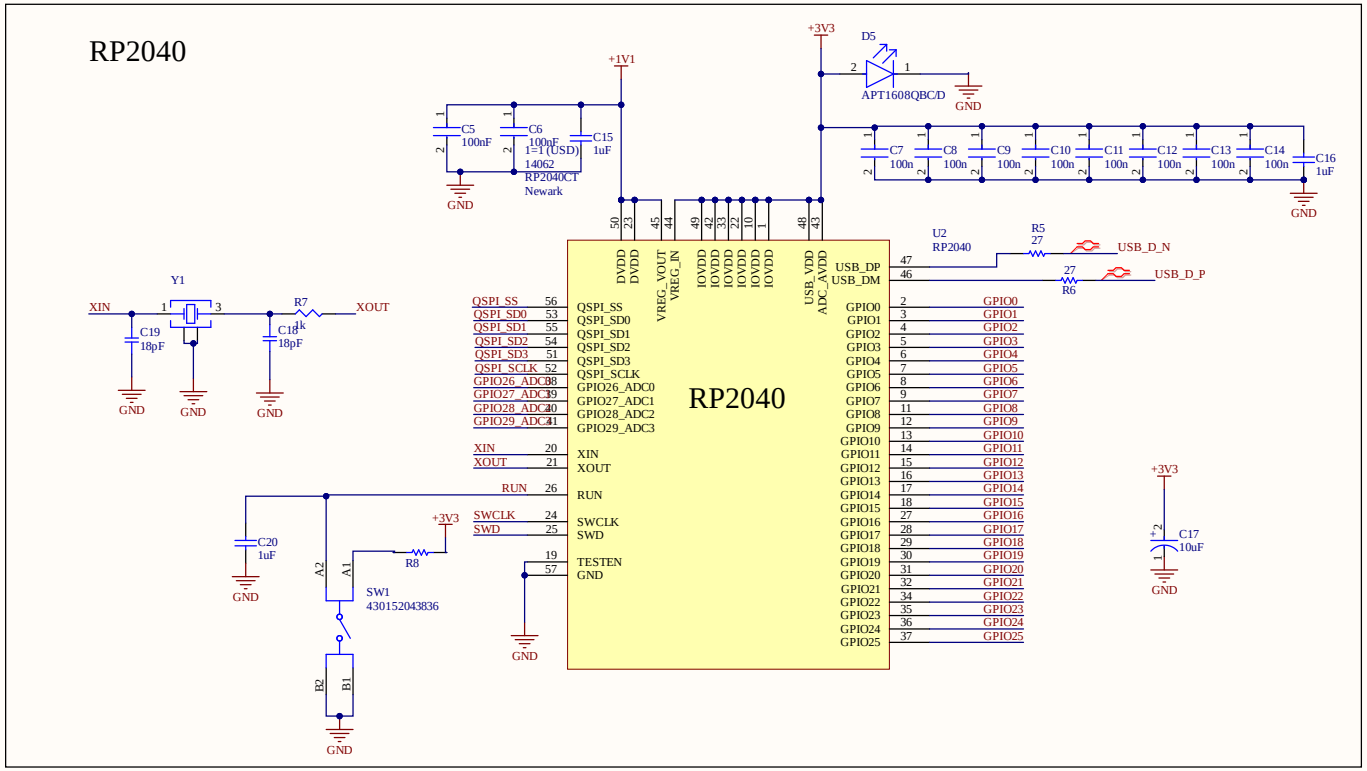

Title		
Size A3	Number	Revision
Date: 9/28/2026		Sheet of
File: C:\Users\..\Main.SchDoc		Drawn By:

C17
C3
C4
D4
U1
C20
C1
C2
C11
C15
C13
C14
C12
R2
R3
D1
D3
C10
*1
C16
C9
C8
C7
D2
Y1
C6
C5
U2
J2
R7
R8
R1
J5