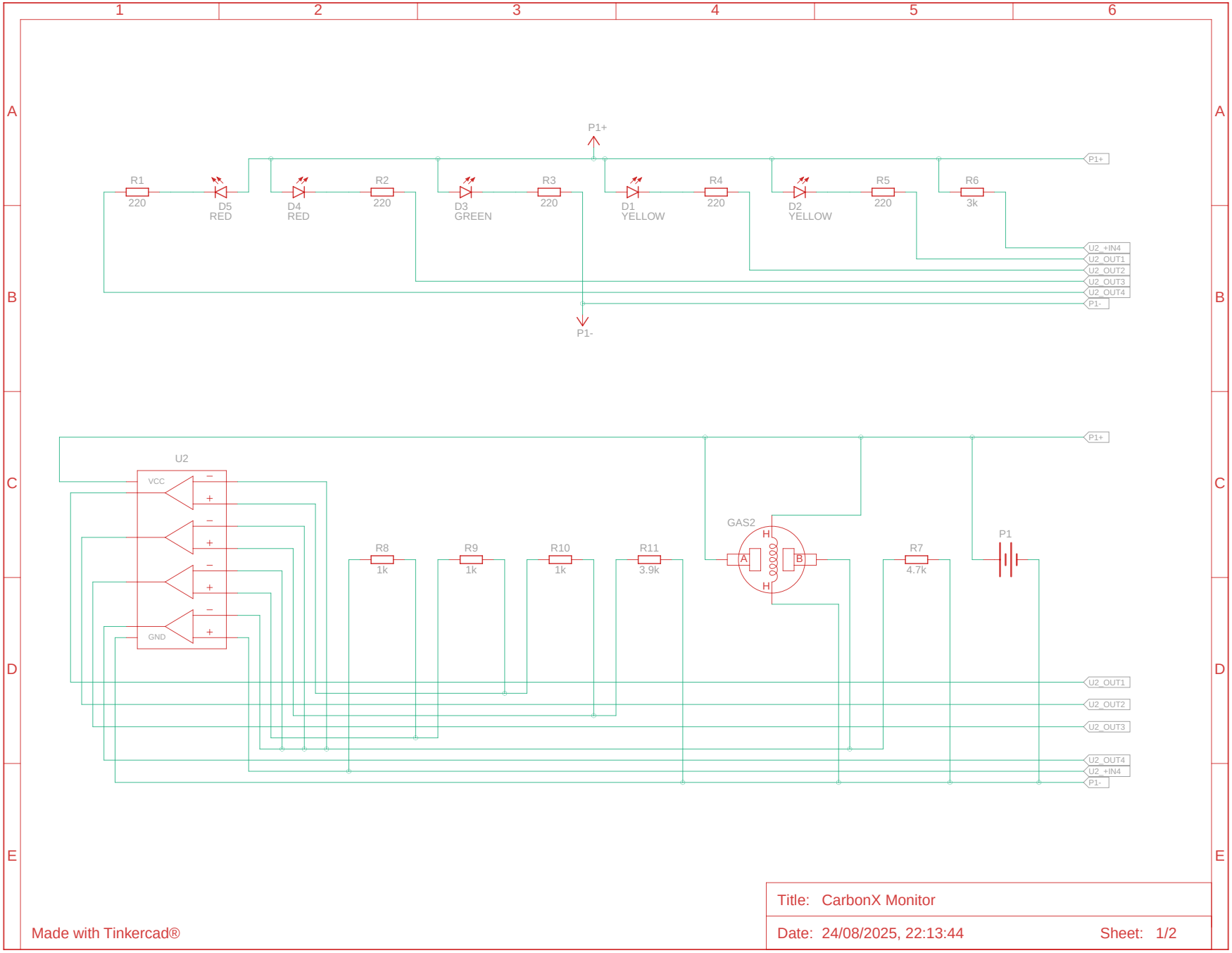

Made with Tinkercad®

Title: CarbonX Monitor

Date: 24/08/2025, 22:13:44

Sheet: 1/2

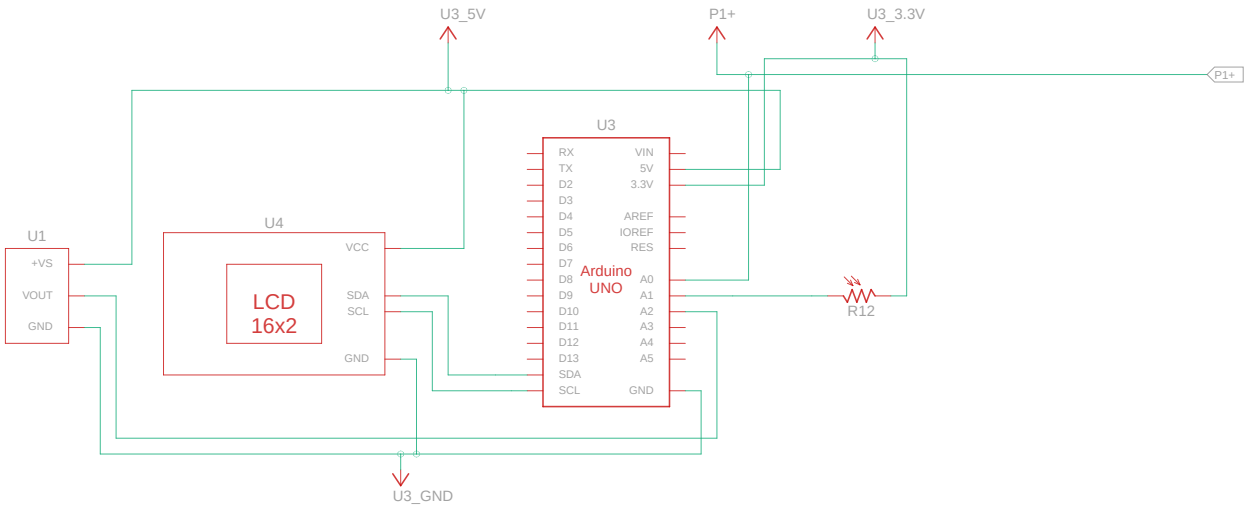

Made with Tinkercad®

Title: CarbonX Monitor

Date: 24/08/2025, 22:13:44

Sheet: 2/2