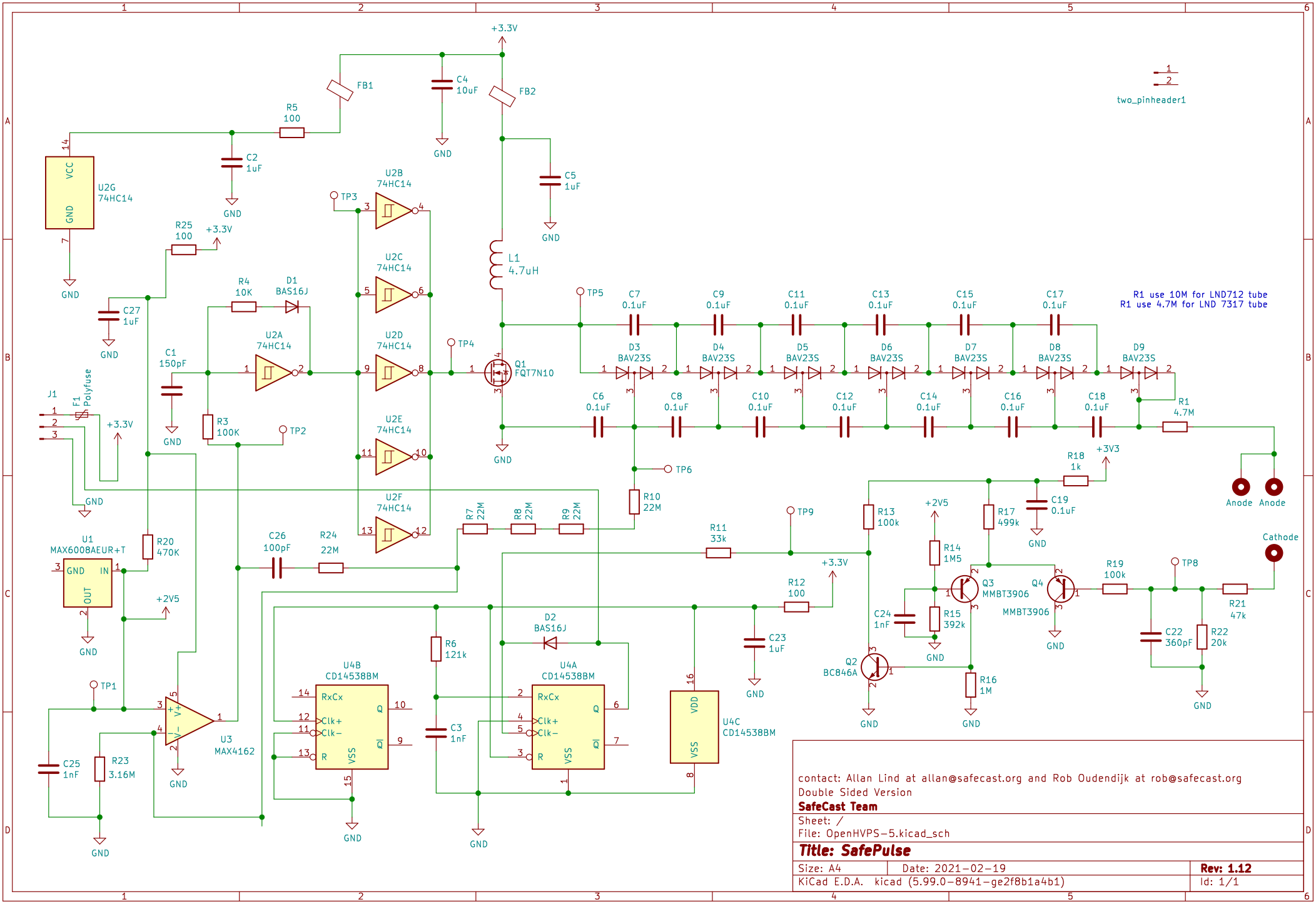


contact: Allan Lind at allan@safecast.org and Rob Oudendijk at rob@safecast.org
Double Sided Version
**SafeCast Team**

Sheet: /
File: OpenHVPS-5.kicad_sch

**Title: SafePulse**

| | | |
|---|---|---|
| Size: A4 | Date: 2021-02-19 | **Rev: 1.12** |
| KiCad E.D.A. kicad (5.99.0-8941-ge2f8b1a4b1) | | Id: 1/1 |