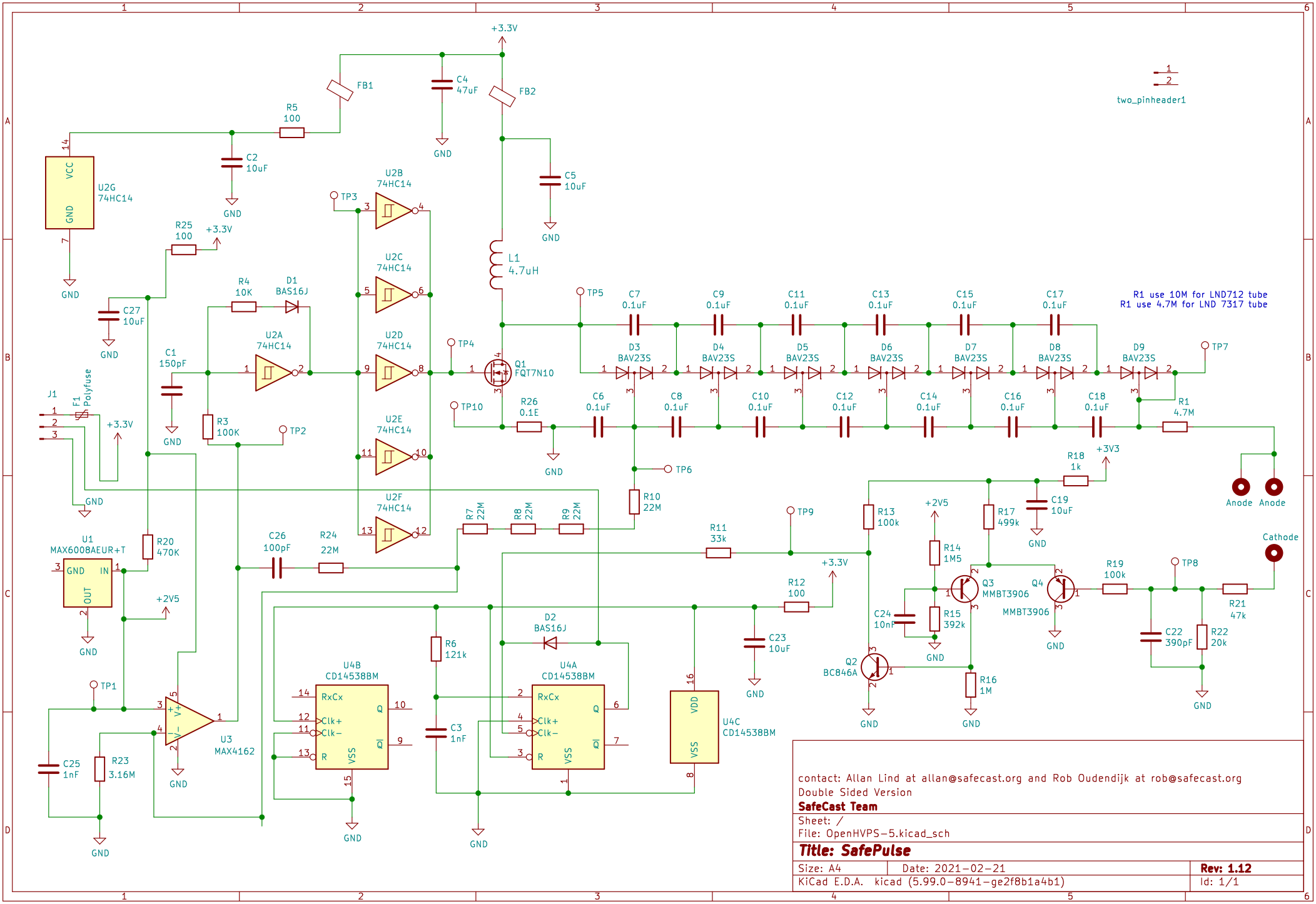

contact: Allan Lind at allan@safecast.org and Rob Oudendijk at rob@safecast.org
Double Sided Version
SafeCast Team

Sheet: /
File: OpenHVPS-5.kicad_sch

Title: SafePulse

Size: A4	Date: 2021-02-21	**Rev: 1.12**
KiCad E.D.A. kicad (5.99.0-8941-ge2f8b1a4b1)		Id: 1/1