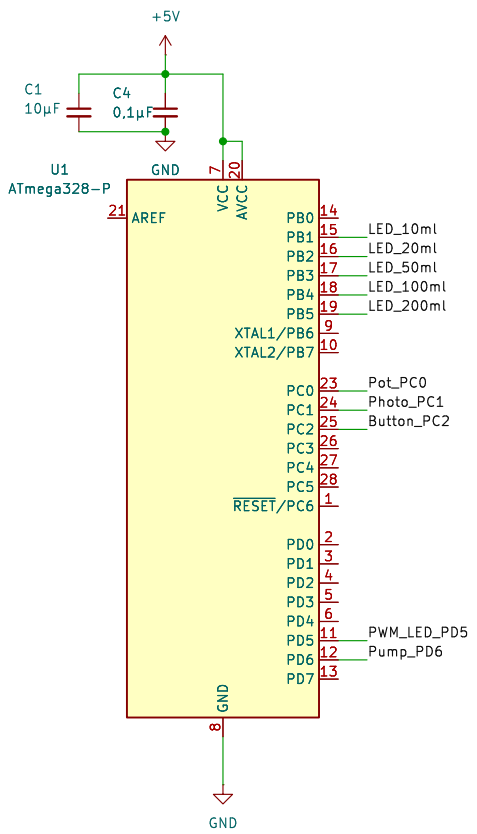

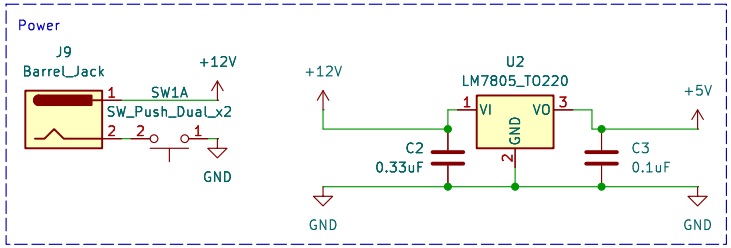

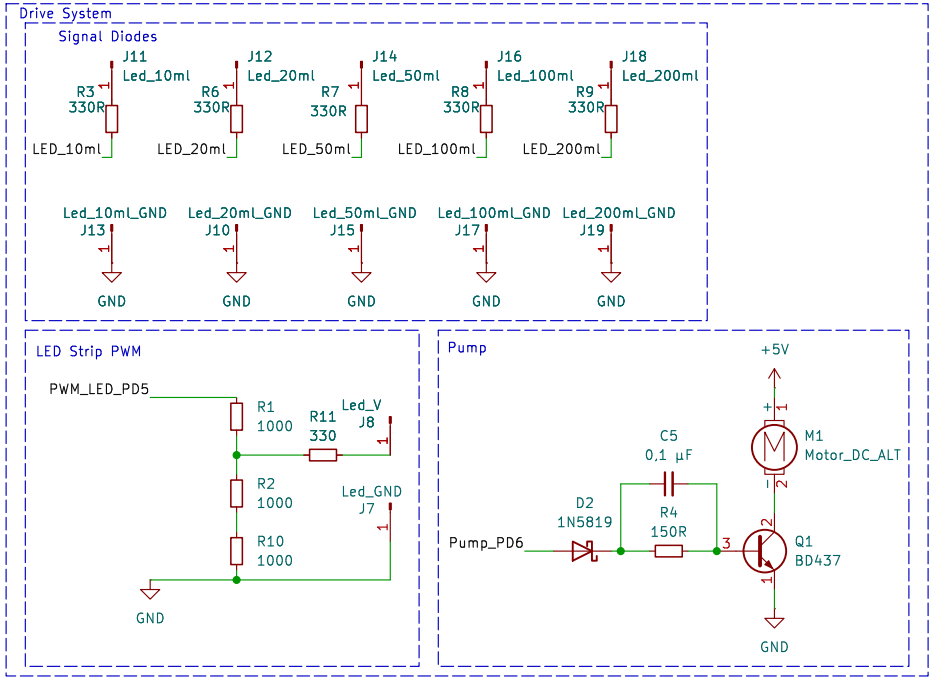

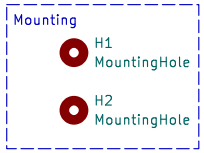

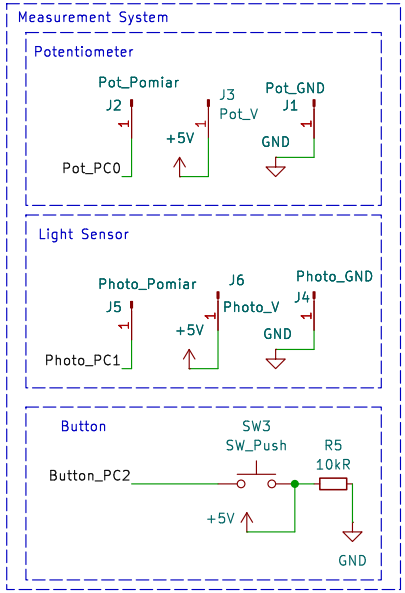

Sheet: /
File: Sterowniki_projekt_2025_2026.kicad_sch

Title:

Size: A4	Date:	Rev:
KiCad E.D.A. 9.0.0		Id: 1/1

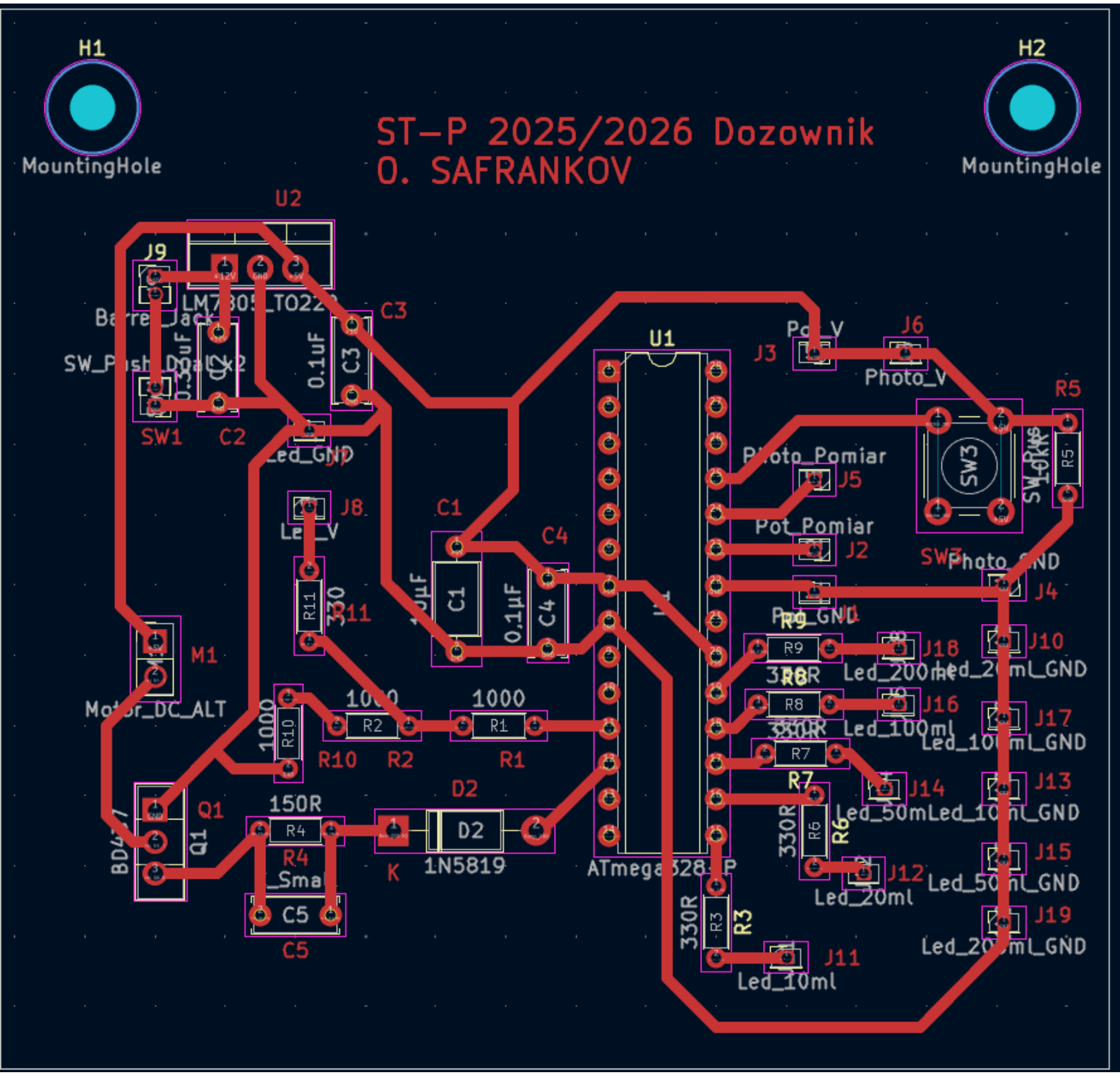
ST-P 2025/2026 Dozownik
O. SAFRANKOV
H1
MountingHole
H2
MountingHole
U2
J9
LM7805_TO220
C3
0.1uF
C3
SW1
C2
J7
J8
C1
C4
0.1µF
C4
R11
330
M1
Motor_DC_ALT
1000
R10
R2
R1
Q1
150R
R4
D2
1N5819
K
C5
U1
ATmega328_P
J3
J6
Photo_V
R5
SW3
Photo_Pomiar
J5
Pot_Pomiar
J2
Photo_GND
J4
R9
J18
R8
J16
R7
J14
R6
J12
R3
J11
Led_10ml
J10
J17
J13
J15
J19