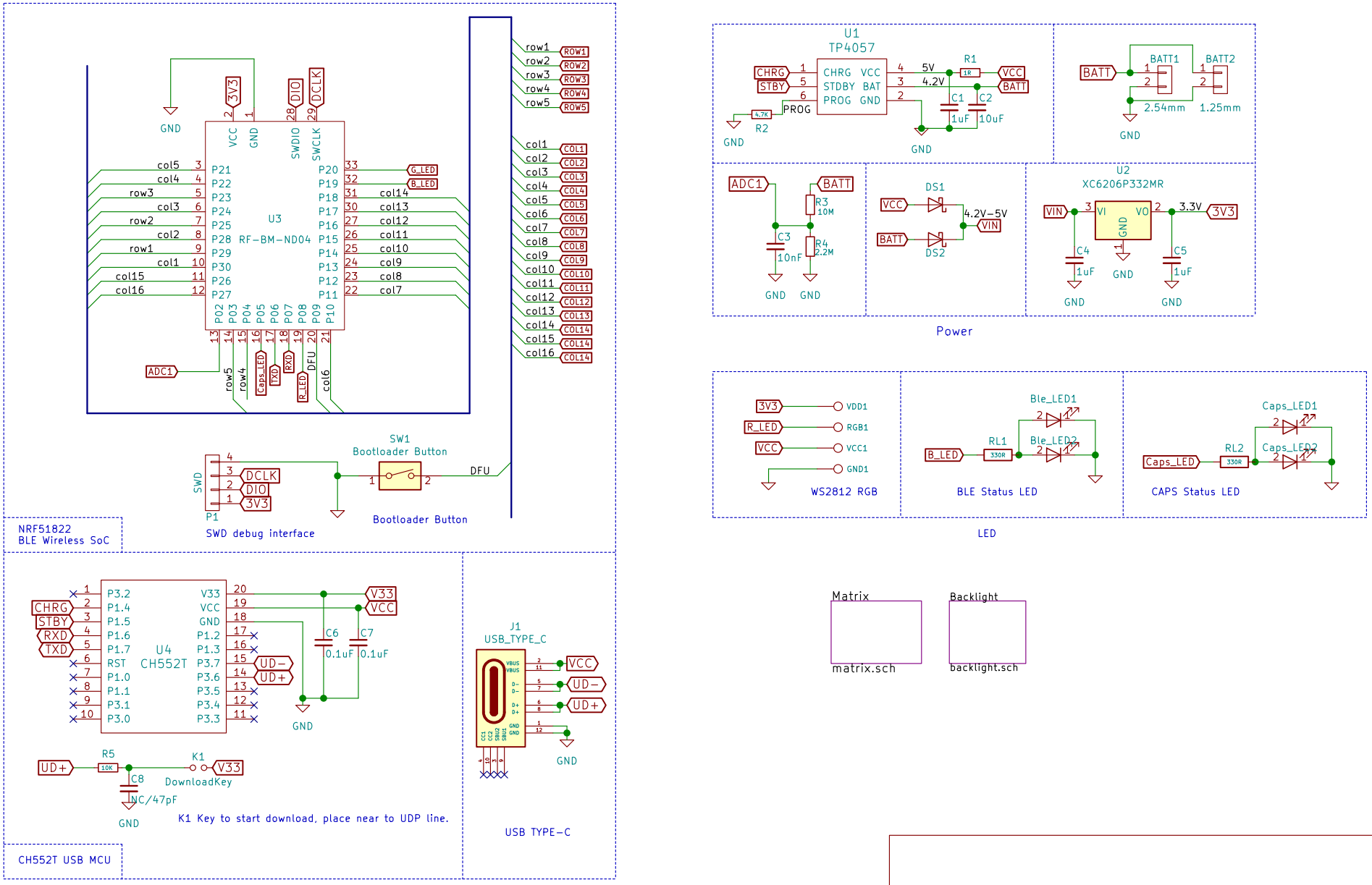

Glab.online

Sheet: /

File: keyboard.sch

Title: nrf51822 keyboard – schematic

Size: A4	Date: 2019–05–11	**Rev: Rev.D**
KiCad E.D.A. kicad (5.1.0)–1		Id: 1/3