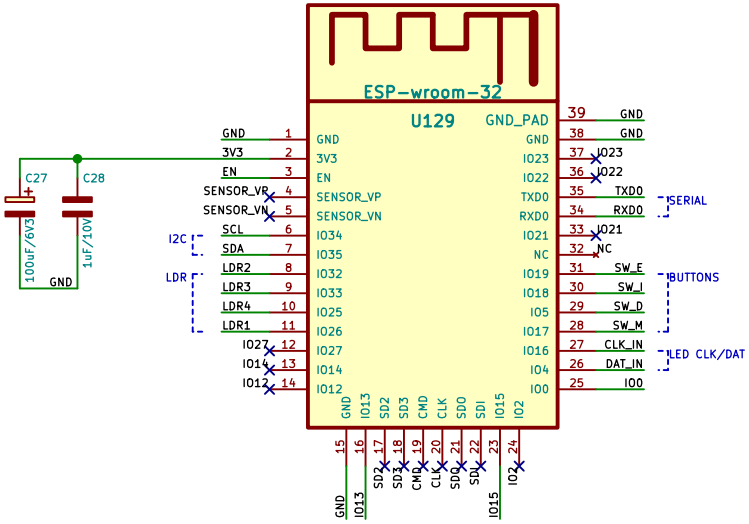

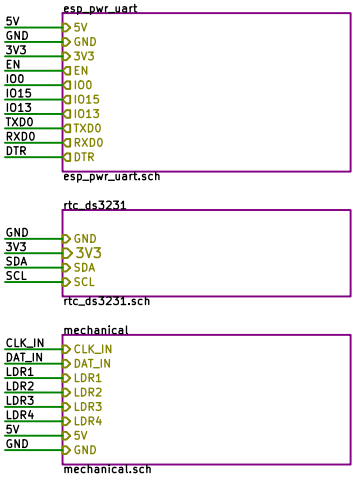

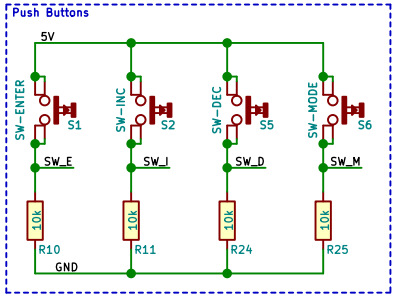

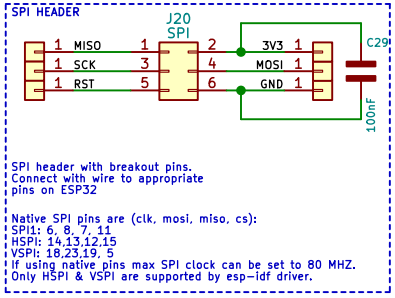

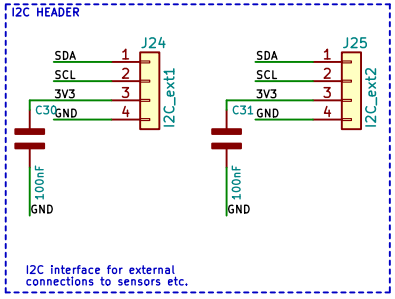

https://github.com/wyolum/KlokTHREEjr
www.wyolum.com

Sheet: /
File: k3jr_controller.sch

Title: KlokTHREEjr Controller

Size: A4	Date: 2018-02-07	Rev: rev 1
KiCad E.D.A. kicad no-vcs-found-3ad386961ubuntu16.04.1		Id: 1/4

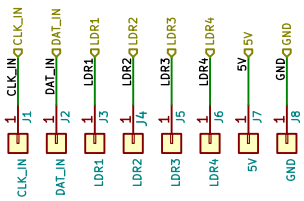

Mounting holes for
piggy back attachment
of "snap-off" control board.
Use M3 HEX posts to connect
LED board to control board

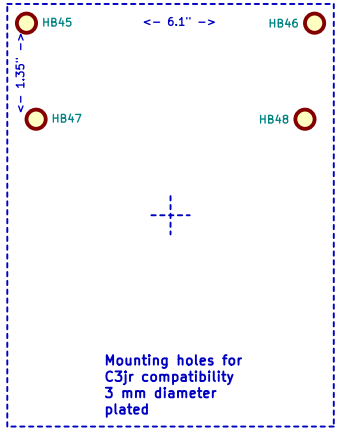

https://github.com/wyolum/KlokTHREEjr
www.wyolum.com

Sheet: /mechanical/
File: mechanical.sch

open source hardware

Title: KlokTHREEjr Controller

Size: A4	Date: 2018-02-07	**Rev: rev 1**
KiCad E.D.A. kicad no-vcs-found-3ad386961ubuntu16.04.1		Id: 2/4

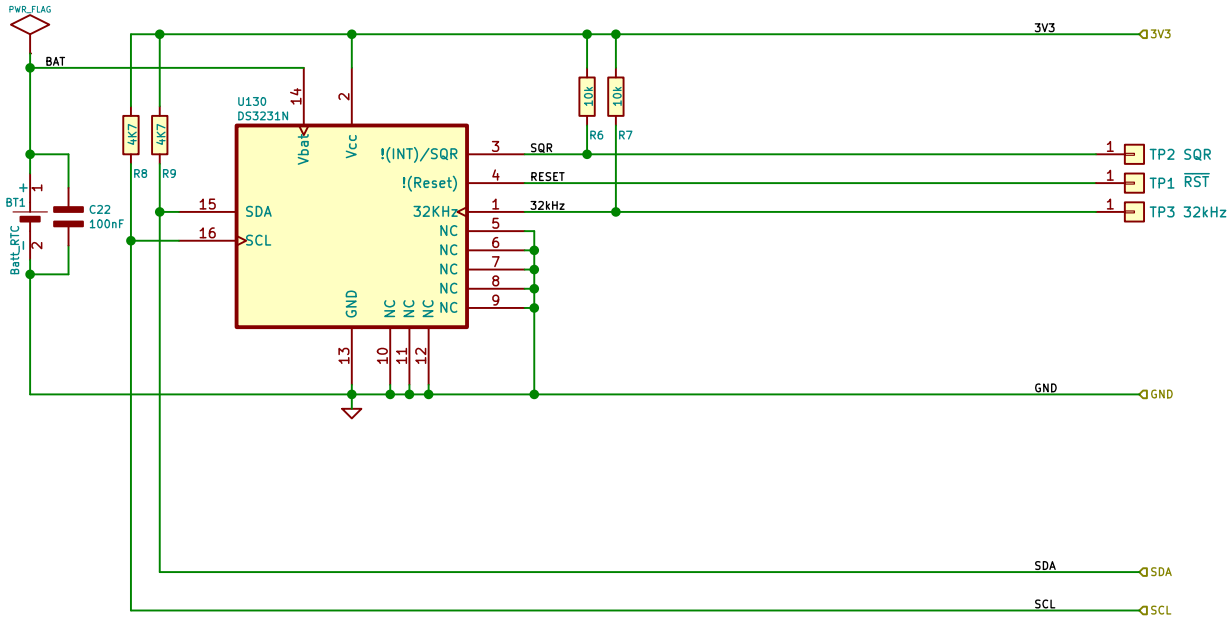

https://github.com/wyolum/KlokTHREEjr

www.wyolum.com

Sheet: /rtc_ds3231/

File: rtc_ds3231.sch

Title: KlokTHREEjr Controller

Size: A4	Date: 2018-02-07	**Rev: rev 1**
KiCad E.D.A. kicad no-vcs-found-3ad386961ubuntu16.04.1		Id: 3/4

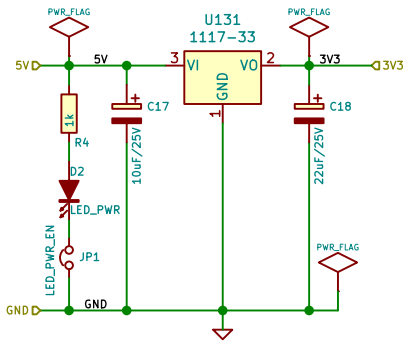

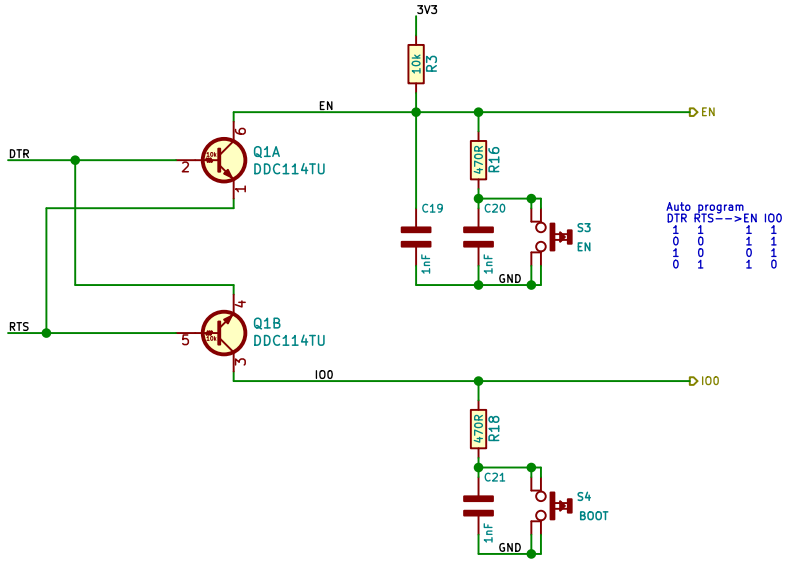

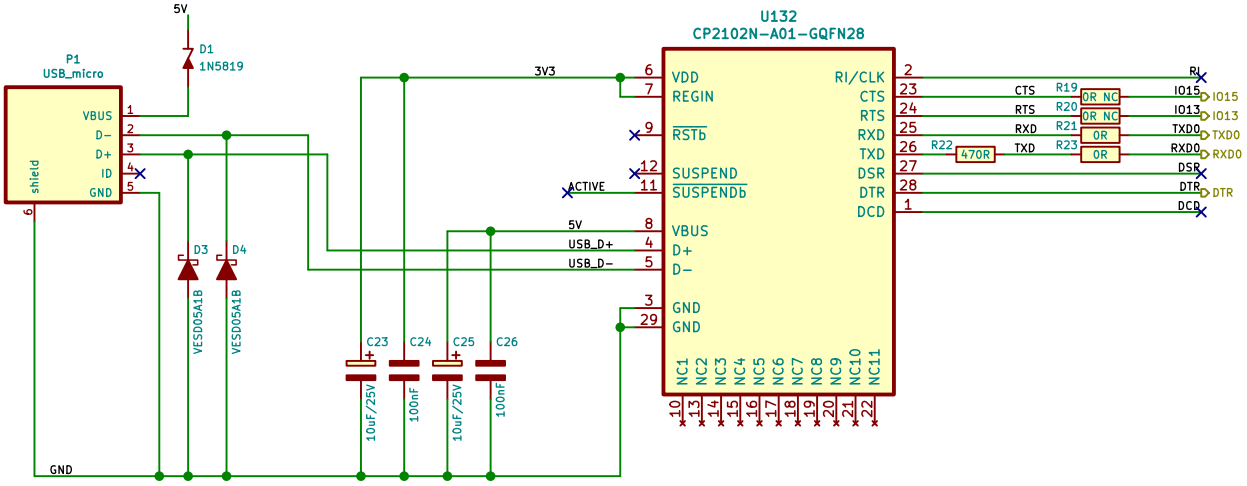

https://github.com/wyolum/KlokTHREEjr

www.wyolum.com

Sheet: /esp_pwr_uart/

File: esp_pwr_uart.sch

Title: KlokTHREEjr Controller

Size: A4	Date: 2018-02-07	**Rev: rev 1**
KiCad E.D.A. kicad no-vcs-found-3ad386961ubuntu16.04.1		Id: 4/4