Chapter - 11
Boolean Algebra

11.1 Introduction:

George Boole, a nineteenth-century English Mathematician, developed a system of logical algebra by which reasoning can be expressed mathematically. In 1854, Boole published a classic book, "An Investigation of the Laws of thought" on which he founded the Mathematical theories of Logic and Probabilities,

Boole's system of logical algebra, now called Boolean algebra, was investigated as a tool for analyzing and designing relay switching circuits by Claude E. Shannon at the Massachusetts institute of Technology in 1938. Shannon, a research assistant in the Electrical Engineering Department, wrote a thesis entitled "A" symbolic Analysis of Relay and Switching Circuits. As a result of his work, Boolean algebra is now, used extensively in the analysis and design of logical circuits. Today Boolean algebra is the backbone of computer circuit analysis.

11.2 Two Valued Logical Symbol:

Aristotle made use of a two valued logical system in devising a method for getting to the truth, given a set of true assumptions. The symbols that are used to represent the two levels of a two valued logical system are 1 and 0. The symbol 1 may represent a closed switch, a true statement, an "on" lamp, a correct action, a high voltage, or many other things. The symbol "O" may represent on open switch, a false statement, an "off" lamp, an incorrect action, a low voltage, or many other things.

For the electronics circuits and signals a logic 1 will represent closed switch, a high voltage, or an "on" lamp, and a logic 0 will represent an open switch, low voltage, or an "off" lamp. These describe the only two states that exist in digital logic systems and will be used to represent the in and out conditions of logic gates.

11.3 Fundamental Concepts of Boolean Algebra:

Boolean algebra is a logical algebra in which symbols are used to represent logic levels. Any symbol can be used, however, letters of the alphabet are generally used. Since the logic levels are generally associated with the symbols 1 and 0, whatever letters are used as variables that can take the values of 1 or 0.

Boolean algebra has only two mathematical operations, addition and multiplication. These operations are associated with the OR gate and the AND gate, respectively.

11.4 Logical Addition:

When the + *(*the logical addition) symbol is placed between two variables, say X and Y, since both X and Y can take only the role 0 and 1, we can define the + Symbol by listing, all possible combinations for X and Y and the resulting value of X + Y.

The possible input and out put combinations may arranged as follows:

$$0 + 0 = 0$$
$$0 + 1 = 1$$
$$1 + 0 = 1$$
$$1 + 1 = 1$$

This table represents a standard binary addition, except for the last entry. When both' X and Y represents 1's, the value of X + Y is 1. The symbol + therefore does not has the "Normal" meaning, but is a Logical addition symbol. The plus symbol (+) read as "OR", therefore X +Y is read as X or Y.

This concept may be extended to any number of variables for example A + B + C +D = E Even if A, B, C and D all had the values 1, the sum of the values i.e. is 1.

11.5 Logical Multiplication:

We can define the "." (logical multiplication) symbol or AND operator by listing all possible combinations for (input) variables X and Y and the resulting (output) value of X. Y as,

$$0 .0= 0$$
$$0 .1 = 0$$
$$1 .0 = 0$$
$$1 .1 = 1$$

Note : Three of the basic laws of Boolean algebra are the same as in ordinary algebra; the commutative law, the associative law and the distributive law.

The commutative law for addition and multiplication of two variables is written as,

$$A + B = B + A$$

And $$A . B = B . A$$

The associative law for addition and multiplication of three variables is written as,

$$(A + B) + C = A + (B + C)$$

And $$(A .B) . C = A. (B. C)$$

The distributive law for three variables involves' both addition and multiplication and is written as,

$$A (B+ C) = A B + AC$$

Note that while either '+' and '.' s can be used freely. The two cannot be mixed without ambiguity in the absence of further rules.

For example does A . B + C means (A . B) + C or A . (B+ C)? These two form different values for A = O, B = 1 and C = 1, because we have

$$(A . B) + C = (0.1) + 1 = 1$$

and $$A . (B + C) = 0 . (1 + 1) = 0$$

which are different. The rule which is used is that '.' is always performed before '+'. Thus X . Y + Z is (X.Y) + Z.

11.6 Logic Gates:

A logic gate is defined as a electronics circuit with two or more input signals and one output signal. The most basic logic Circuits are OR gates, AND gates, and invertors or NOT gates. Strictly speaking, invertors are not logic gates since they have only one input signal; however They are best introduced at the same time as basic gates and will therefore be dealt in this section.

OR Gate:

An OR gate is a logic circuit with two or more input signals and one output signal. The output signal will be high (logic 1) if any one input signal is high (logic 1). OR gate performs logical addition

The symbol for the logic OR gate is

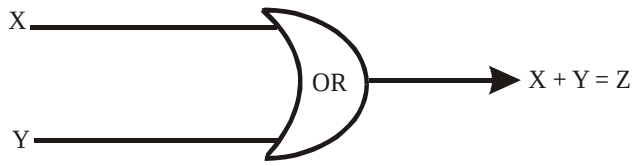

Fig. 1

A circuit that will functions as an OR gate can be implemented in several ways. A mechanical OR gate can be fabricated by connecting two switches in parallel as shown in figure 2.

Fig. 2

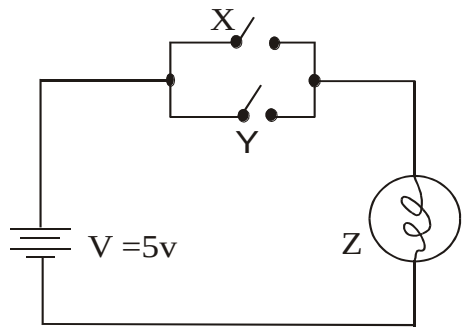

Truth Table for a switch circuit operation as an OR gate.

Table – 1

Switch X	Switch Y	Output Z
Open	Open	0
Open	Closed	5V
Closed	Open	5V
Closed	Closed	5V

Note that for the switch circuit were use diodes and resistors, Transistors and resistors and other techniques to control the voltage and resistance.

Note: If the switch is "on", it is represented by 1, and if, it is "off", it is represented by 0.

Truth Table for a Two-input **OR** gate.

Table - 2

In Put		**Out Put**
X	Y	Z
0	0	0
0	1	1
1	0	1
1	1	1

Truth table for a three in put **OR** gate.

Table – 3

A	**B**	**C**	**X**
0	0	0	0
0	0	1	1
0	1	0	1
0	1	1	1
1	0	0	1
1	0	1	1
1	1	0	1
1	1	1	1

No. of combinations = 2^n, where n is number of variables.

AND Gate:

An **AND** gate is a logic circuit with two or more input signals and one output signal. The output signal of an **AND** gate is high (logic 1) only if all inputs signals are high (Logic 1).

An **AND** gate performs logical multiplication on inputs. The symbol for **AND** gate is

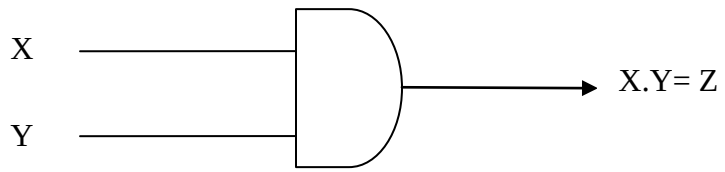

Fig.3

A circuit that will functions as an **AND** gate can be implemented in several ways. A mechanical **AND** gate can be fabricated by connecting two switches in series as show in fig. 4

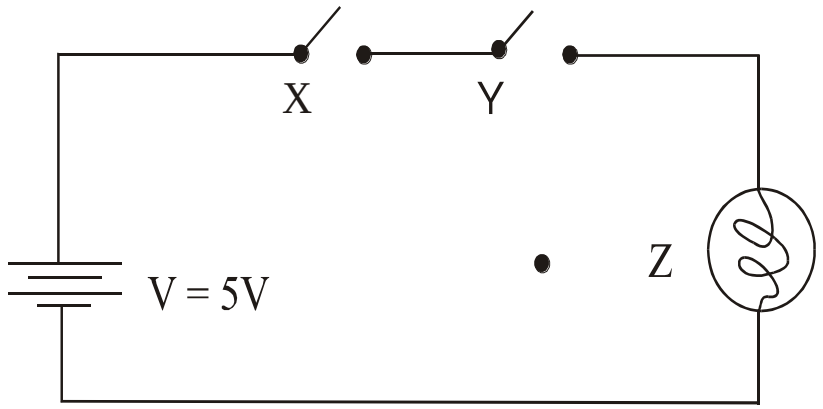

Fig.4

Truth Table for a switch circuit operation as an AND gate.

Table – 4

Switch X	**Switch Y**	**Output Z**
Open	Open	0
Open	Closed	0
Closed	Open	0
Closed	Closed	5V

Truth Table for a Two-input **AND** gate

Table - 5

In Put		**Out Put**
X	**Y**	**Z**
0	0	0
0	1	0
1	0	0
1	1	1

Truth Table for a three input **AND** gate.

Table 6

Inputs			**Output**
A	**B**	**C**	**X**
0	0	0	0
0	0	1	0
0	1	0	0
0	1	1	0
1	0	0	0
1	0	1	0
1	1	0	0
1	1	1	1

Complementation:

The logical operation of complementary or inverting a variable is performed in the Boolean Algebra. The purpose of complementation is to

invert the, input signal, since there are only two values that variables can assume in two-value logic system, therefore if the input is 1, the output is 0 and if the input is 0 the output is 1. The symbol used to represent complementation of a variable is a bar (-) above the variable, for example the complementation of A is written as $\bar{A}$ and is read as "complement of A" or "A not".

Since variables can only be equal to 0 or 1, we can say that

$\bar{O} = 1$ Or $\bar{1} = O$

Also $\bar{\bar{O}} = O$ Or $\bar{\bar{1}} = 1$

Invertors Or NOT gate:

An inventor is a gate with only one

.input signal and one output signal; the output signal is always the opposite or complement of the input signal.

An invertor is also called a **NOT** gate because the output not the same as the input.

Symbol of inverter or **NOT** gate is

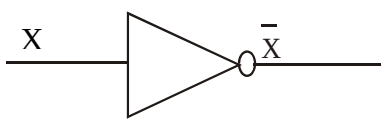

Fig.5 (i)

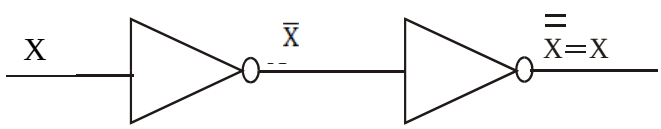

Fig.5 (ii)

Fig.5(ii) (Two invertors in series)

Fig. 5

The circle at the output or input indicates inversion. It also distinguish between the symbol for the **NOT** gate or the symbol for an

operational amplifier or certain types of buffers, because the symbol -►- can also be used for diode.

Truth Table for a **NOT** circuit

Table – 7

In put	Out put
0	1
1	0

NOTE :A word is a group (or string) of binary bits that represents a closed instruction or data,

Example 1: How many input words in the Truth Table of an 6 - input OR gate? Which' input word produce a high output?

Solution:

The total number of input word's = $2^n = 2^6 = 32$, where n is number of inputs. In an OR gate 1 or more-high inputs produce a high output. Therefore the word of 000000 results in low outputs all other input words produce a high output.

11.7 Basic Duality in Boolean Algebra:

We state the duality theorem without proof. Starting with a Boolean relation, *we* can derive another Boolean relation by

1. Changing each **OR (+)** sign to an **AND (.)** sign
2. Changing each **AND (.)** sign to an **OR (+)** sign.
3. Complementary each 0 and 1

For instance

$$A + 0 = A$$

The dual relation is $A \cdot 1 = A$

Also since $A (B + C) = AB + AC$ by distributive law. Its dual relation is $A + B C = (A + B) (A + C)$

11.8 Fundamental Laws and Theorems of Boolean Algebra:

$$\left.\begin{array}{ll} 1. & X + 0 = X \\ 2. & X + 1 = 1 \\ 3. & X + X = X \\ 4. & X + \overline{X} = 1 \end{array}\right\} \text{OR operations}$$

5.	$X \cdot 0 = 0$	AND operations
6.	$X \cdot 1 = X$	
7.	$X \cdot X = X$	
8.	$X \cdot \overline{X} = 0$	
9.	$\overline{\overline{X}} = X$	Double complement
10.	$X + Y = Y + X$	Commutative laws
11.	$XY = YX$	
12.	$(X + Y) + Z = X + (Y + Z)$	Associative laws
13.	$(X \cdot Y) \cdot Z = X \cdot (Y \cdot Z)$	
14.	$X(Y + Z) = XY + XZ$	Distribution Law
15.	$X + Y \cdot Z = (X + Y) \cdot (X + Z)$	Dual of Distributive Law
16.	$X + XZ = X$	Laws of absorption
17.	$X(X + Z) = X$	
18.	$X + \overline{X}Y = X + Y$	Identity Theorems
19.	$X(\overline{X} + Y) = X.Y$	
20.	$\overline{X+Y} = \overline{X} \cdot \overline{Y}$	De Morgan's Theorems
21.	$\overline{X.Y} = \overline{X} + \overline{Y}$	

Proof of Boolean Algebra Rules:

Every rule can be proved by the application of rules and by perfect Induction.

Rule 15:

(i) This rule does not apply to normal algebra We follow:

$(X + Y)(X + Z) = XX + XZ + YX + YZ$

$= X + XZ + YX + YZ, \qquad X.X = X$

= X (1 + Z) + YX + YZ

= X + YX + YZ, 1 + Z = 1

= X (1 + Y) + Y Z

= X + YZ 1 + Y = 1

(ii) Proof by Perfect induction Method:

Truth Table-8 for the R.H.S. (X + Y) (X+ Z)
and for L.H.S. X + YZ

X	Y	Z	X+Y	X+Z	YZ	(X+Y)(X+Z)	X+YZ
0	0	0	0	0	0	0	0
0	0	1	0	1	0	0	0
0	1	0	1	0	0	0	0
0	1	1	1	1	0	1	1
1	0	0	1	1	0	1	1
1	0	1	1	1	0	1	1
1	1	0	1	1	1	1	1
1	1	1	1	1	1	1	1

R.H.S. = L.H.S.

Rule .16 X +XZ =X

L.H.S. =X + XZ = X(1 + Z) = X. 1 = X, I + Z = 1

= R.H.S.

Rule 17: X(X +Z) =X

L.H.S. = X (X + Z)

=X X +XZ By distributive law

=X +XZ, as X.X = X

=X (1 +Z), As 1 +Z =1

= X . 1

= X

L.H.S. = R.H.S.

Rule 18: **(i)** $X + \overline{X}\,Y = X + Y$

L.H.S. $= X + \overline{X}\,Y = (X + \overline{X}) . (X + Y)$ By rule 15 dual Of distributive law.

$= 1 . (X + Y)$ as $X + \overline{X} = 1$

$= X + Y$

L.H.S. = R.H.S.

(ii) Proof by perfect Induction Method:

Truth Table 9 for L.H.S. $X + \overline{X}\,Y$ and for R.H.S. $X + Y$

X	Y	$\overline{X}$	$\overline{X}\,Y$	$X + \overline{X}\,Y$	X + Y
0	0	1	0	0	0
0	1	1	1	1	1
1	0	0	0	1	1
1	1	0	0	1	1

L.H.S. =R.H.S.

Rule 19:

(i) $X.(\overline{X} + Y) = X . Y$

L.H.S. $= X (\overline{X} + Y) = X\,\overline{X} + X\,Y$ By distributive law

$= 0 + XY$ as $X . \overline{X} = 0$

$= X\,Y$

L.H.S. = R.H.S.

(ii) Proof by Perfect Induction Method:

Truth Table 10 for L.H.S. $X. (\overline{X} + Y)$ and for R.H.S. X.Y.

X	Y	$\overline{X}$	$\overline{X} + Y$	$X (\overline{X} + Y)$	X . Y
0	0	1	1	0	0
0	1	1	1	0	0
1	0	0	0	0	0
1	1	0	1	1	1

L.H.S. = R.H.S.

11.9 De Morgan's Theorems:

(i) $\overline{X + Y} = \overline{X} . \overline{Y}$

(ii) $\overline{X . Y} = \overline{X} + \overline{Y}$

Proof: (i) By Perfect induction

(i)Truth Table 11 for L.H.S. $\overline{X + Y}$ and for R.H.S. $\overline{X} . \overline{Y}$

X	Y	$\overline{X}$	$\overline{Y}$	X +Y	$\overline{X + Y}$	$\overline{X} . \overline{Y}$
0	0	1	1	0	1	1
0	1	1	0	1	0	0
1	0	0	1	1	0	0
1	1	0	0	1	0	0

L.H.S. =R.H.S.

(ii)Truth Table 12 **for L.H.S.** $\overline{X . Y}$ and for R.H.S. $\overline{X} + \overline{Y}$

X	Y	$\overline{X}$	$\overline{Y}$	X .Y	$\overline{X . Y}$	$\overline{X} + \overline{Y}$
0	0	1	1	0	1	1
0	1	1	0	0	1	1
1	0	0	1	0	1	1
1	1	0	0	1	0	0

L.H.S. = R.H.S.

Rules:

3rd and 7th called idempotent. These shows that Boolean algebra is idempotent.

i.e. A + A = A and A. A = A

Proof:

The variable A can have only the value 0 or 1.

(3) If A =0, then 0 + 0 = 0

If A = 1, then 1 + 1 = 1

(7) If A = 0, then 0.0. = 0

If A =1, then 1 . 1 =1

Rule 2: X +1 =1

If X = 0 then 0 + 1 = 1

If X = 1, then 1 + 1 =1

Rule 5: $X \cdot 0 = 0$

If $X = 0$, Then $0.0 = 1$

If $X = 1$, Then $1 \cdot 0 = 1$

Rule 9: $\overline{\overline{X}} = X$, i.e., the Boolean algebra is involuted.

If $X = 0$, Then $\overline{O} = 1$ and $\overline{1} = 0$

So $\overline{\overline{O}} = \overline{1} = 0$

If $X = 1$, Then $\overline{1} = 0$ and $\overline{O} = 1$

So $\overline{\overline{1}} = \overline{O} = 1$

Similarly we can prove the remaining rules by setting the values of variables as 0 and 1 or by perfect induction

Example:2: Express the Boolean function

$$XY + YZ + \overline{Y}Z = XY + Z$$

Solution:

$$\begin{aligned} \text{L.H.S.} &= XY + YZ + \overline{Y}Z \\ &= XY + Z(Y + \overline{Y}) \\ &= XY + Z.1 \\ &= XY + Z \\ \text{L.H.S} &= \text{R.H.S.} \end{aligned}$$

Example 3: Find the complement of the expression: X + YZ and verified the result by perfect induction.

Solution:

$$\overline{X + YZ} = \overline{X} \cdot \overline{YZ}$$

$$= \overline{X} \cdot (\overline{Y} + \overline{Z}) \text{ by DeMorgan's Law}$$

This relation can be verified by perfect induction.

Truth Table 13 for L.H.S. $\overline{X+YZ}$ and for R.H.S. $\overline{X}\,.\,(\overline{Y}+\overline{Z})$

X	Y	Z	$\overline{X}$	$\overline{Y}$	$\overline{Z}$	YZ	X+YZ	$\overline{Y}+\overline{Z}$	$\overline{X+YZ}$	$\overline{X}\,(\overline{Y}+\overline{Z})$
0	0	0	1	1	1	0	0	1	1	1
0	0	1	1	1	0	0	0	1	1	1
0	1	0	1	0	1	0	0	1	1	1
0	1	1	1	0	0	1	1	0	0	0
1	0	0	0	1	1	0	1	1	0	0
1	0	1	0	1	0	0	1	1	0	0
1	1	0	0	0	1	0	1	1	0	0
1	1	1	0	0	0	1	1	0	0	0

L.H.S. = R.H.S.

Example 4: Find the complement of $\overline{A}\,B + C\,\overline{D}$, (b) AB +CD = 0

Solution:

(a) $\overline{\overline{A}\,B + C\,\overline{D}} = (\overline{\overline{A}\,B}).(\overline{C\,\overline{D}})$

$= (\overline{\overline{A}} + \overline{B}).(\overline{C} + \overline{\overline{D}})$

$(A + \overline{B}).(\overline{C} + D)$

(b) $AB + CD = 0$

Taking complement on both sides.

$= \overline{AB + CD} = \overline{O}$

$= \overline{AB}\,.\,\overline{CD} = 1$

$(\overline{A} + \overline{B})\,.\,(\overline{C} + \overline{D}) = 1$

Example 5: Simplify the Boolean expressions:

(i) $(X + Y)\,(X + \overline{Y})\,(\overline{X} + Z)$

(ii) $XYZ + X\,\overline{Y}\,Z + XY\,\overline{Z}$

Solution:

(i) First simplify $(X + Y)(X + \overline{Y})$

$(X + Y)(X + \overline{Y}) = XX + X\overline{Y} + YX + Y\overline{Y}$

$= X + X\overline{Y} + YX + O,$ as $XX = X$

as $Y\overline{Y} = 0$

$= X + X(\overline{Y} + Y),$ as $\overline{Y} + Y = 1$

$= X + X \cdot 1,$ as $X \cdot 1 = X$

$= X + X$

$= X$

Now $(X + Y)(X + \overline{Y})(\overline{X} + Z)$

$= X(\overline{X} + Z)$

$= X\overline{X} + XZ,$ by distributive law

$= 0 + XZ$

$= XZ$

(ii) $XYZ + X\overline{Y}Z + XY\overline{Z}$

$= XZ(Y + \overline{Y}) + XY\overline{Z}$

$= XZ + XY\overline{Z},$ as $Y + \overline{Y} = 1$

$= X(Z + Y\overline{Z})$

$= X[(Z + Y).(Z + \overline{Z})],$ (By Rule 15 dual of distributive

$= X[(Z + Y).1] = X(Z + Y)$

$= X(Y + Z),$ by commutative law.

Example 6: Minimize the following expression by use of Boolean rules.

(a) $X = A\,B\,C + \overline{A}\,B + A\,B\,\overline{C}$

(b) $X = \overline{A}\,B\,\overline{C} + A\,\overline{B}\,\overline{C} + \overline{A}\,\overline{B}\,\overline{C} + \overline{A}\,\overline{B}\,\overline{C}$

(c) $AB + \overline{A}\,C + B\,C = AB + \overline{A}\,C$

(d) $(A + B)\,(\overline{A} + C)\,(B + C) = (A + B)\,(\overline{A} + C)$

Solution:

(a) $X = ABC + \overline{A}\,B + AB\overline{C}$

$= ABC + AB\,\overline{C} + \overline{A}\,B$

$= AB\,(C + \overline{C}) + \overline{A}\,B$

$= AB + \overline{A}\,B$ as $C + \overline{C} = 1$

$= (A + \overline{A})\,B.$

$= 1.\,B$

$= B$

(b) $X = \overline{A}\,B\overline{C} + A\,\overline{B}\,\overline{C} + \overline{A}\,\overline{B}\,\overline{C} + \overline{A}\,\overline{B}\,\overline{C}$

$= \overline{A}\,B\overline{C} + A\overline{B}\,\overline{C} + \overline{A}\,\overline{B}\,\overline{C}$ as $\overline{A} + \overline{A} = \overline{A}$

$= \overline{A}\,B\overline{C} + (A + \overline{A})\,\overline{B}\,\overline{C}$

$= \overline{A}\,B\overline{C} + 1\,.\,B\overline{C}$

$= (\overline{A}\,B + \overline{B})\,\overline{C}$

$= [(\overline{A} + \overline{B})\,.\,(\overline{B} + \overline{B})]\,\overline{C}$ by the dual of distribution, rules 15

$= (\overline{A} + \overline{B})\,.\,1]\,\overline{C}$

$= (\overline{A} + \overline{B})\,\overline{C}$

(c) L.H.S. $= AB + \overline{A}\,C + BC$

$= AB + \overline{A}\,C + BC$

$= AB + \overline{A}\,C + 1.BC$ as $1 = A + \overline{A}$

$= AB + \overline{A}\,C + (A + \overline{A})\,BC$

$= AB + \overline{A}\,C + ABC + \overline{A}\,BC$, by distributive law

$= AB + ABC + \overline{A}\,C + \overline{A}\,BC$, by commutative law

$= AB\,(1 + C) + \overline{A}\,C\,(1 + B)$, AS $1 + X = 1$

$= AB + \overline{A}\,C$

L.H.S. =R.H.S.

(d) L.H.S. $= (A + B)\,(\overline{A} + C)(B + C)$

$= (A\overline{A} + AC + B\overline{A} + BC)\,(B + C)$

$= (0 + AC + B\overline{A} + BC)\,(B + C)$

$= (AC + B\overline{A} + BC)\,(B + C)$

$= [AC + B(\overline{A} + C)]\,(B + C)$

$= ABC + ACC + BB\,(\overline{A} + C) + BC\,(\overline{A} + C)$

$= ABC + AC + B\,(\overline{A} + C) + BC\,(\overline{A} + C)$

$= AC\,(B + 1) + B\,(\overline{A} + C)\,(1 + C)$

$= AC + B(\overline{A} + C)$

$= A\overline{A} + AC + B\,(\overline{A} + C)$ as $A\overline{A} = 0$

$= A(\overline{A} + C) + B(\overline{A} + C)$ or by rule 19.

$= (A + B)(\overline{A} + C)$

L.H.S. = R.H.S.

11.10 Sum of Product (Minterm):

The S**um of Product** means that the products of the variables that are seperated by a plus sign. The variables can be complemented or uncomplemented, **for example,**

$$AB + A\overline{B} + \overline{A}B + \overline{A}\,\overline{B} + AB\overline{C} + A\overline{B}C + A\overline{B}C$$

11.11 Product of sum (Maxterm):

The P**roduct of Sum** means that the sum of variables that are seperated by a multiplication sign. For example,

$$(A + B)(\overline{A} + B)(A + \overline{B})(\overline{A} + \overline{B}),$$

$$(A + \overline{B} + C)(A + \overline{B} + \overline{C})(\overline{A} + \overline{B} + C)$$

11.12 Fundamental Products:

The products that produce a high (1) output are called Fundamental products. For example, for the two input variables A and B.

We have four possible combination's, which are shown in the table below and the fundamental product's corresponding to each:

Truth Table 14 Two Variables

Table 14

A	B	Fundamental Product	Output Z
0	0	$\overline{A}\,\overline{B}$	1
0	1	$\overline{A}B$	1
1	0	$A\overline{B}$	1
1	1	AB	1

For three input variables or signals a similar idea is applied. Whenever the input variable is 0, the same variable is complemented in the fundamental product.

Truth Table 15. Three variables

A	B	C	Output Z	Fundamental Product	Output for product	Sum terms	Output for Sum
0	0	0	0	$\overline{A}\,\overline{B}\,\overline{C}$	1	A+B+C	0
0	0	1	0	$\overline{A}\,\overline{B}\,C$	1	$A+B+\overline{C}$	0
0	1	0	1	$\overline{A}\,B\,\overline{C}$	1	$A+\overline{B}+C$	0
0	1	1	1	$\overline{A}\,BC$	1	$A+\overline{B}+\overline{C}$	0
1	0	0	0	$A\,\overline{B}\,\overline{C}$	1	$\overline{A}+B+C$	0
1	0	1	0	$A\,\overline{B}\,C$	1	$\overline{A}+B+\overline{C}$	0
1	1	0	1	$AB\,\overline{C}$	1	$\overline{A}+\overline{B}+C$	0
1	1	1	0	ABC	1	$\overline{A}+\overline{B}+\overline{C}$	0

Sum of product(SOP) $= \overline{A}\,B\,\overline{C} + \overline{A}\,B\,C + A\,B\,\overline{C}$

Product of sum(POS) $= (A + B + C)\,(A + B + \overline{C})\,(\overline{A} + B + C)$

$(\overline{A} + B + \overline{C})\,(\overline{A} + \overline{B} + \overline{C})$

Note: See remarks for sum of product and product of sums.

Remarks:

(1) A sum of product (minterm) is obtained as follows: For each row of the truth table for which the out put is 1, the Boolean term is the product of variables that are equal to 1 and the complement of variable that are equal to 0. The sum of these products is the desired Boolean equation.

(2) A product of sum expression is obtained as follows: each row of the truth table for which the output is 0, the Boolean term is the sum of the variables that are equal 0 plus the complement of the variables that are equal to 1. The

product of these sum is the desired Boolean equation.

Example 7: Find the sum-of-products and product of sums equations from the given truth Table - 16.

Table 16

A	B	C	Output Functional Values
0	0	0	0
0	0	1	1
0	1	0	1
0	1	1	0
1	0	0	1
1	0	1	0
1	1	0	1
1	1	1	0

Sum-of-Product Equation

$$X = \overline{A}\,\overline{B}\,C + \overline{A}\,B\overline{C} + A\overline{B}\,\overline{C} + AB\overline{C}$$

Product-of-Sums Equation:

$$Y = (A + B + C)(A + \overline{B} + \overline{C})(\overline{A} + B + \overline{C})(\overline{A} + \overline{B} + \overline{C})$$

NOTE:*The Boolean expression from the truth table is the sum of product (minterms)terms for which the output is i.e.,*

$$X = \overline{A}\,\overline{B}\,C + \overline{A}\,B\overline{C} + A\overline{B}\,\overline{C} + AB\overline{C}$$

11.13 NAND and NOR gates:

DeMorgan's theorems form two new gates NAND and NOR gates. These gates are the most popular and most widely used logic gates. Since any logic circuit can be constructed using only NAND and NOR gates, they are often referred to as the Universal building blocks.

NAND gates:

This NAND (or not AND) gate is an AND gate followed by a NOT circuit: The operation of the NAND gate is described by one of

DeMorgan's Theorem, which states that $\overline{A.B} = \overline{A} + \overline{B}$. The NAND gate has two or more input signals but only one output signal. Any input must be high to get a high output

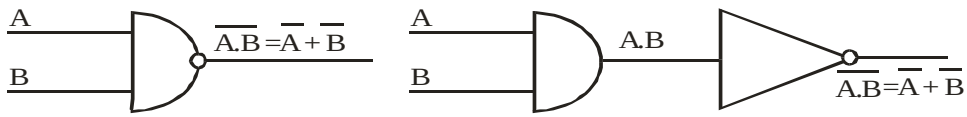

NANDGae (a) Standard Symbol (b) Logical meaning of NAND Gate

Fig. 6(a) (b)

NAND- Gate truth Table 17

Table 17

A	B	A.B.	$\overline{A.B}$
0	0	0	1
0	1	0	1
1	0	0	1
1	1	1	0

NOR-Gate:

The NOR (or not OR) gate is an OR-gate followed by a NOT circuit. The operation of the NOR-gate is described by DeMorgan's theorem, which states that.

$$\overline{A + B} = \overline{A} \,.\, \overline{B}$$

The NOR gate has two or more input signals but only one output signal. All inputs must be low to get a high output.

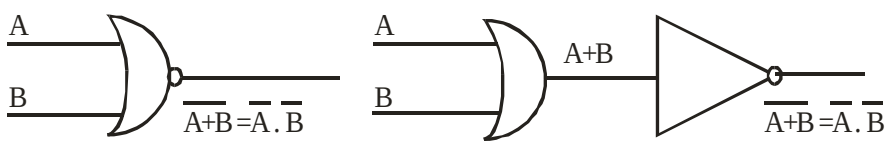

NAND Gate (c) Standard Symbol (d) Logical meaning of NAND Gate

Fig. 6(C)(d)

Table 18

A	B	A + B	$\overline{A + B}$
0	0	0	1
0	1	1	0
1	0	1	0
1	1	1	0

NAND and NOR Gates in Two level Network

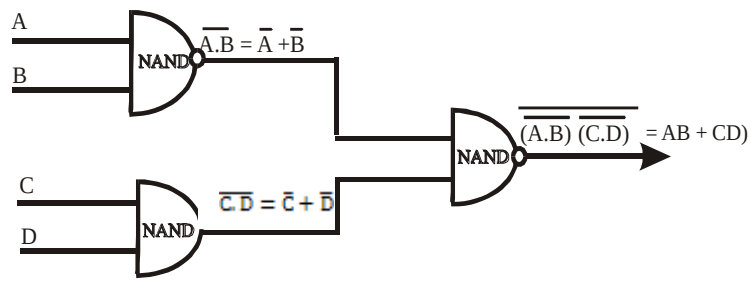

Fig. 7 (i) NAND Gates in Two - Level Networks

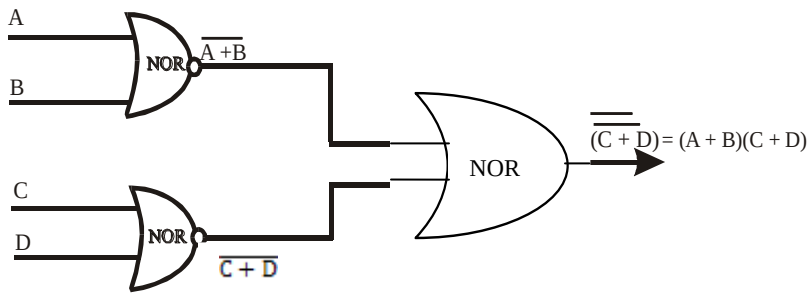

Fig. 7: NAND and NOR Gates in Two - Level Networks

Fig. 7

11.14 Combination of Gates:

The OR gate and AND gates and invertors can be interconnected to form gatting or logic networks, in the switching theory, these are also called combinational networks. The Boolean algebra expression corresponding to a given Network can be driven by systematically progressing from input to output on the gates.

A net work that forms (i) $(X.Y) + (\overline{X}\ .\overline{Y})$

and another net work that forms (ii) $(X + Y).(\overline{X} + \overline{Y})$ are shown as

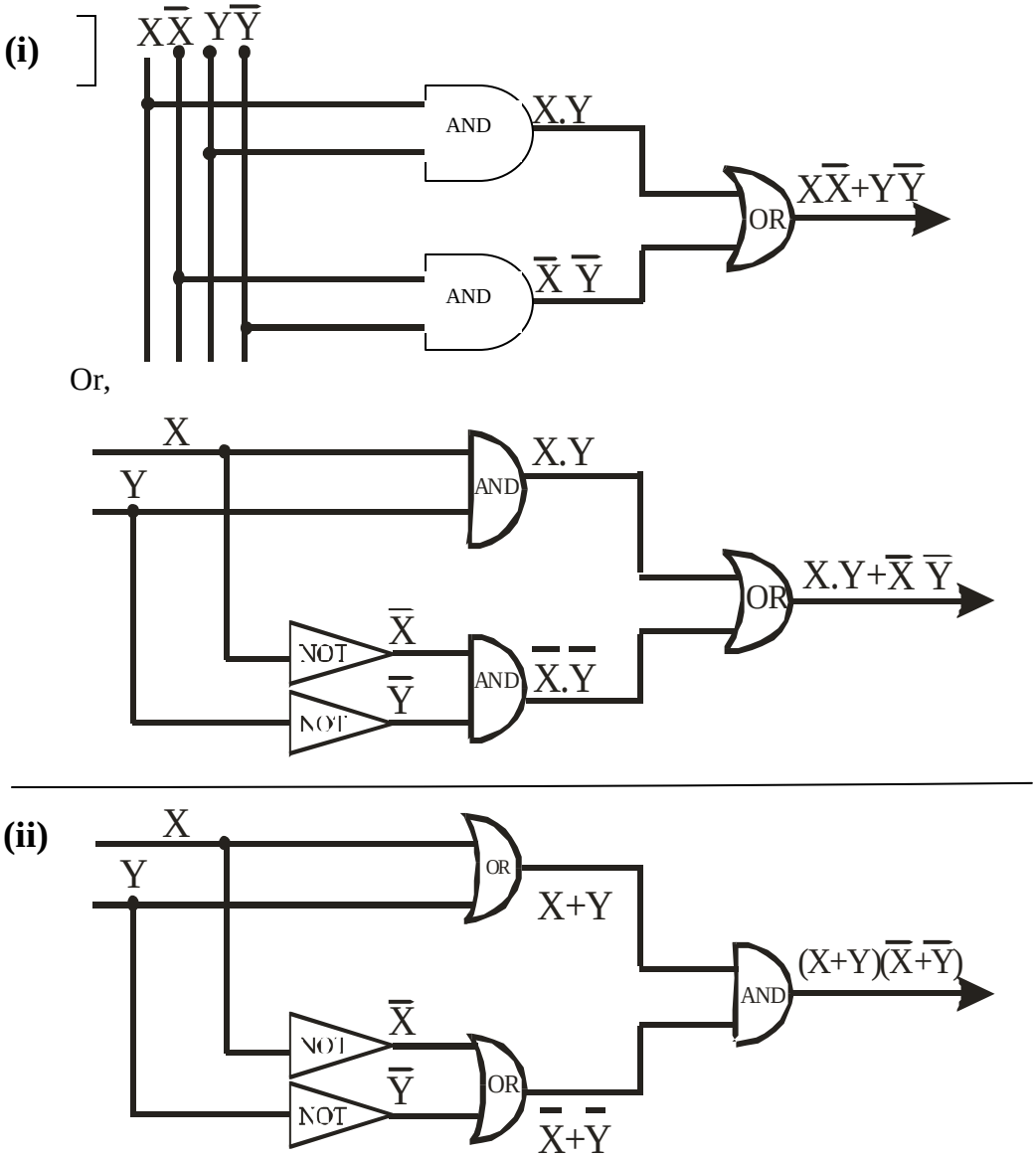

Fig. 8

11.15 Boolean Expression and Logic Diagrams:

Boolean expressions are frequently written to describe mathematically the behavior of a logic circuit. Using a truth table and the Boolean expression, one can determine which combinations of input signals cause the output signal.

Example 8: Write the Boolean expression that describes mathematically the behavior of logic circuit shown in fig.10. Use a truth table to determine what input conditions produce a logic 1 output.

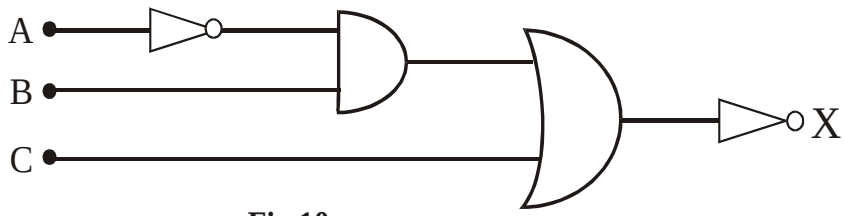

Fig.10

Solution:

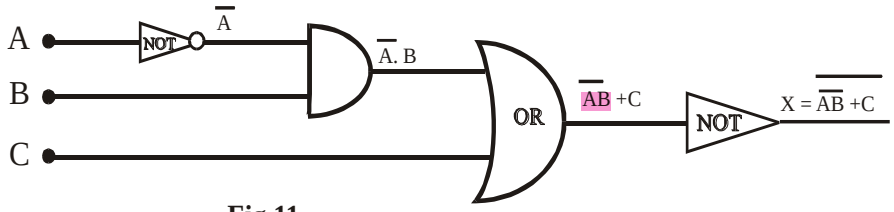

Fig.11

Fig.11 Circuit showing solution for example 8

Solution:

Truth Table 18 for the Circuit in Fig.11

A	B	C	$\overline{A}$	$\overline{A}$ B	$\overline{A}$ B +C	$\overline{\overline{A}\ B + C}$
0	0	0	1	0	0	1
0	0	1	1	1	1	0
0	1	0	1	1	1	0
0	1	1	1	1	1	0
1	0	0	0	0	0	1
1	0	1	0	1	1	0
1	1	0	0	0	0	1
1	1	1	0	1	1	0

Thus the input conditions those produce a logic 1 output are : 0 0 0 , 100, 110

Example 9: Given the Boolean expression

$$X = AB + ABC + A\,\overline{B}\,\overline{C} + A\,\overline{C}$$

(a) Draw the logic diagram for the expression.

(b) Minimize the expression.

(c) Draw the logic diagram for the reduced expression.

Solution: (a)The logic diagram is shown in the Fig. 12.

(b) $X = AB + ABC + A\,\overline{B}\,\overline{C} + A\,\overline{C}$

$= AB\,(1 + C) + A\,\overline{C}\,(\overline{B} + 1)$

$= AB.\,1 + A\,\overline{C}\,.1 = AB + A\,\overline{C}$

$= A(B + \overline{C})$

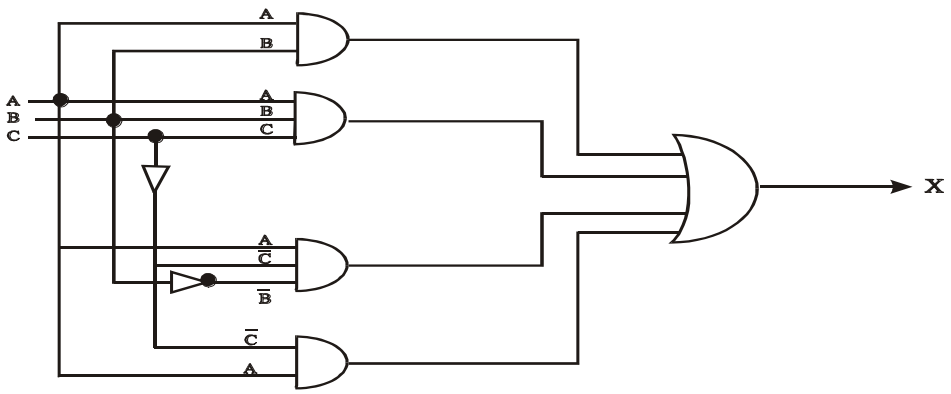

FIG. 12

(c)

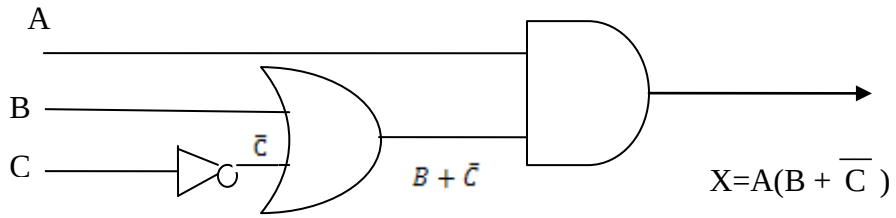

Fig.13 Minimize diagram for example 9.

11.16 Karnaugh Maps:

Many engineers and technicians prefer to use Karnaugh Maps to minimize the Boolean expressions instead of Boolean Algebra. This section tells you how to construct. Here we use the Karnaugh maps to minimize expressions containing up to four Variables.

A Karnaugh map is a graphical form of a *truth* table and consists of a square or rectangular array of adjacent cells or blocks. The number of cells in a particular map depends on the number of variables in the Boolean expression to be minimized. The number of cells for a particular map is determined from expression.

$$N = 2^n$$

Where N = number of cells required for the Karnaugh map.

n = number of variables in the Boolean expression.

The configuration of the Karnaugh map for two, three and four variable expression is shown in Fig. In the Karnaugh map, each variable and its complement are assigned half of the cells in the map. The assigned cells consists of adjacent rows or columns.

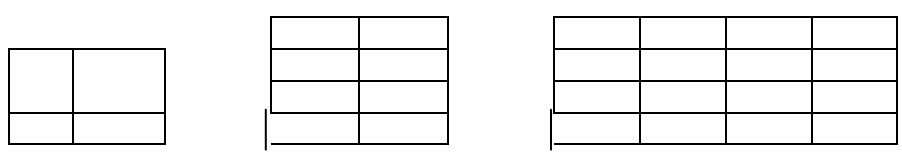

(a) Two-variables map (b) Three variables map (c) Four Variables map

The sides of the map are labeled to show cell assignment as shown for the two variables map in Fig. 16. The two left hand cell beneath A are assigned to A and the two right hand cells or assigned to $\overline{A}$. Moving horizontally, the top two cells are assigned to variable B and the bottom two cells are assigned to $\overline{B}$. Each cell assigned a unique address, which is specified by the row column in which the cell resides. Fig. 17 shows which variable share each cell in fig. 16.

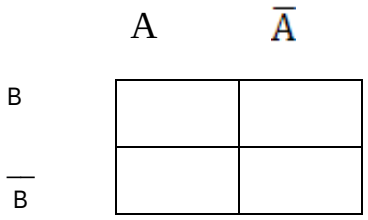

Fig. 16

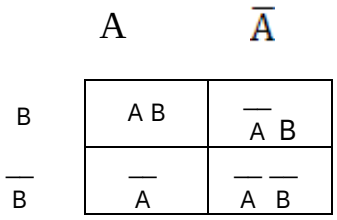

Fig. 17

The maps showing cell assignments for three and four variables expression are shown in Fig.18. The sides of the maps may be labeled in only convenient way. Two cells of a map are considered to be adjacent as long as their respective addressed differed by no more than one variable.

For example, ABCD and ABC$\overline{D}$ are addresses of adjacent cells. Diagonal cells are not adjacent, even though they shore a common corner, because their addresses differe by more than one variable.

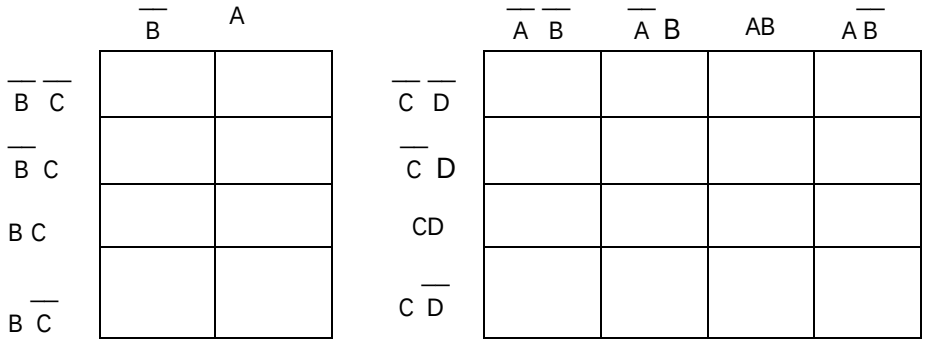

(a) (b)

Fig. 18

After learning how to draw a Karnaugh map, the next step is to plot the given expression. The given expression must be in the sum-of-products form. The expression A$\overline{B}$ C +ABC is the sum of two products, or, two minterms, and is therefore in the correct form; however, the expression (A+C) (B+C) is not in the correct form and cannot be plotted in this form.

To plot an expression, we identify with a 1 each cell addressed by a minterm (product term). After placing a l in cells addressed by each minterm, adjacent cells containing all are enclosed either singularly, in pairs, or in groups of 4, 8 or 16 (integral power of 2). We enclose the largest number of adjacent cells containing a ‘l’ as possible – as long as the enclosed ‘l’s equal 2 raised to an integral power. The enclosed, ‘l’s are collectively called a group or an implicant.

The desired minimized Boolean expression is obtained from the Karnaugh map by applying the following two steps:

1. All 1's must be included in at least one group. It is permissible, and desirable, to enclosed a l more than once if it facilitates enlarging another enclosure.
2. Each group represents a minterm. The sum of the minterms that represent these groups is the minimized Boolean expression in sum-of-products form corresponding to the given logic function.

The use of these rules is illustrated in the following example:-

Example 10: Plot the Boolean express $X = AB + A\overline{B} + BC$ and minimize expression from the Map.

Solution:

Since the expression contains three variables, we need a Karnaugh map containing cells equal to

$N = 2^3 = 8$

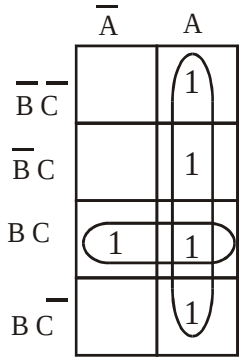

Fig.19

To plot the expression, we start by identifying all cells that are common to AB by placing 1 in these cells. If we repeat this procedure for the terms $A\overline{B}$ and B C and placing a l in cells common to the minterms, we have plotted the function as shown in Fig. 19.

To minimized Boolean expression, all 1,s must be enclosed at least once. Greatest minimization is achieved by enclosing the largest number of adjacent l's possible, even if same have already enclosed.

In Fig. 19, the 1's making up the larger group are common only to A, and the 1's making up the smaller group are common to B and C; therefore, the minimized expression is

$$X = A + BC$$

Algebraic Proof:

The sum-of-products equation corresponding to larger group is

$$Y = A\overline{B}\,\overline{C} + A\overline{B}\,C + AB\overline{C} + ABC$$

$$= \mathbf{A\,(\overline{B}\,\overline{C} + \overline{B}\,C + B\overline{C} + BC)}$$

$$= \mathbf{A\{}\overline{B}\,(\overline{C} + C) + B\,(\overline{C} + C)$$

$$= A(\overline{B} + B)$$

$$= A$$

The sum-of-products equation corresponding to the smaller group is

$$Z = \overline{A}\,BC + ABC$$

$$=(\overline{A} + A)\,BC = BC$$

Example 11: Minimize the following Boolean expression by use of the Karnaugh map.

$$X = B\overline{C} + B\overline{D} + AB + AD + AC + C\overline{D}$$

Solution:

The number of cells are $N = 2^4 = 16$

To plot the expression, place 1 in the cells common to each term in the expression: Fig: 20

	$\overline{A}\,\overline{B}$	$\overline{A}B$	AB	$A\overline{B}$
$\overline{C}\,\overline{D}$		1	1	
$\overline{C}\,D$		1	1	1
$C\,D$			1	1
$C\,\overline{D}$	1	1	1	1

Fig.20

The minimized expressions is:

$$X = B\overline{C} + AD + C\overline{D}$$

NOTE: On four-variable maps, l's is cells on opposite sides of the map may be enclosed since the map is continuous, like a cylinder, in both the horizontal and vertical planes

Example 12: **Minimize the following Boolean expression by use of the Karnaugh map:-**

$$X = A\overline{C}D + \overline{A}B\overline{C}D + \overline{A}\,\overline{B}D + A\overline{B}CD$$

Solution:

Fig.21 shows the Karnaugh map for the expression.

The minimized expression is

$$X = \overline{B}D + \overline{C}D$$

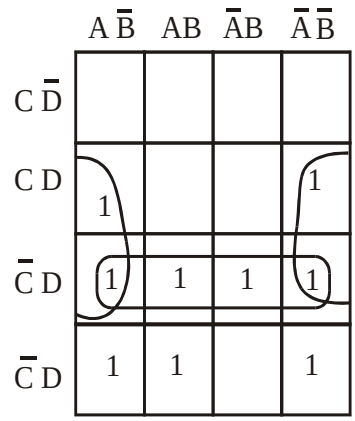

Fig.21

11.17 Non-Unique Group:

Occasionally, we find a Karnaugh map for which more than one set of groups exists. This situation is illustrated in Fig.19. One can readily see that both maps yield Boolean expression with three two-variable minterms. These equivalent expressions, described the same function; however, they differ in the way in which variables are combined. Boolean functions that can be described by two or more equivalent minimized Boolean expressions are referred to as non-unique. On the other hand, functions that described by a single minimized Boolean expressions are referred as unique.

When a non-unique Boolean function is to be implemented with logic gates, it generally does not matter which of the possible minimized expressions is implemented. However, occasionally one expression may be preferred because certain variables or minterms are more accessible or may be available from an existing circuit.

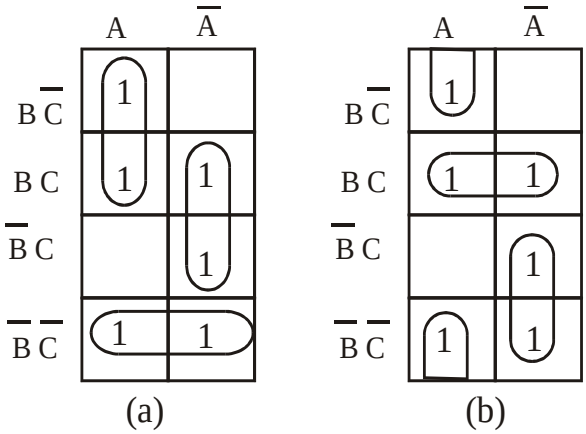

Fig. 19: Boolean expressions from non-unique groups.

(a) $X_1 = AB + \overline{A}C + \overline{B}\,\overline{C}$, (b) $X_2 = A\overline{C} + BC + \overline{A}\,\overline{B}$

Example 12: Read out some of the possible Boolean expressions for the Karnaugh map shown in Fig. 20.

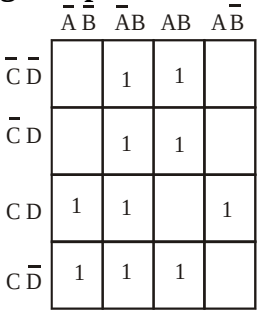

Fig.20

Solution: Fig.20 shows several possible combinations of enclosure and the resulting Boolean expression.

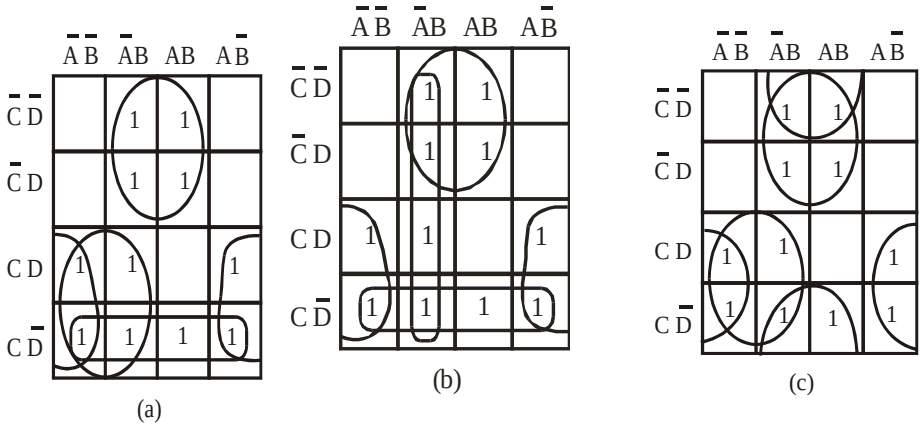

Fig.21 Various combinations of enclosures.

(a) $X = B\overline{C} + \overline{A}\,C + \overline{B}\,C + C\,\overline{D}$

(b) $X = B\overline{C} + \overline{B}\,C + \overline{A}\,B + C\,\overline{D}$

(c) $X = B\,\overline{C} + \overline{A}\,C + \overline{B}\,C + B\,\overline{D}$

11.18 Redundant Groups:

After you finish encircling groups, there is one more thing to do before writing the simplified Boolean equation: eliminate any group whose l's are completely over lapped by other groups. (A group whose 1's are all overlapped by other groups is called redundant group).

11.19 Dont' Care States:

Using the truth table, we, can list each combination of input variables that should cause a high output to exist. For some Boolean functions, the output corresponding to certain combinations of input variables does not matter. This usually occurs because certain combinations of input variables cannot exist. Also, there are times that we do not really care what value a function may take on. In both instances we call such a term a don't care state. Don't-care states, means, that we do not care whether the entry in a **karnaugh** map corresponding to a certain combination of variables is a 1 or a 0. We shall use the symbol X for don't care states.

Don't-care states can be very important in the minimization process. Since we can assign either a 1 or 0 to a don't-care condition, we can choose which ever value will provide a larger enclosure and therefore a simpler, more economical circuit.

Example 13: A logic circuit is to be constructed that will implement the Boolean expression:

$$X = A\overline{B}\,C + \overline{A}\,B\,C + \overline{A}\,\overline{B}\,\overline{C}$$

Plot this expression on a Karnaugh map and reduce the expression if the term $\overline{A}\,\overline{B}\,C$ is a don't care.

Solution:

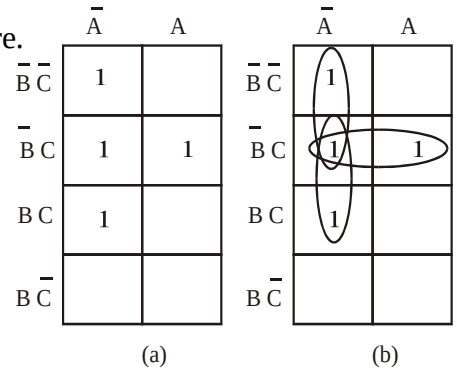

Fig.22 (a) Karnaugh map for given expression (b) Karnaugh map, illustrating the use of don't care states.

The expression corresponding to the map in Fig. 22 (b) is :

$$X = \overline{A}\,\overline{B} + \overline{A}\,C + \overline{B}\,C$$

Therefore, assigning a value of 1 to the don't care State allowed us to reduce the original expression significantly.

11.20 For the given truth table minimize the Boolean expression using Karnaugh map.

Consider the truth table. The Fundamental products for these 1 out put are $\overline{A}\,B\,\overline{C}$, $AB\overline{C}$ and ABC. Enter these 1's on the Karnaugh map.

A	B	C	Output Y
0	0	0	0
0	0	1	0
0	1	0	1
0	1	1	0
1	0	0	0
1	0	1	0
1	1	0	1
1	1	1	1

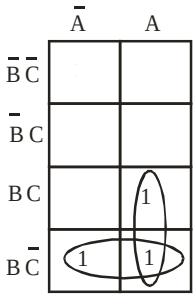

Karanaugh map for the TruthTable

Fig.23

The sum-of-product form for the Boolean expression from the truth table is

$$X = \overline{A}\,B\overline{C} + AB\overline{C} + ABC$$

To minimize this Boolean expression from the Karnaugh map, we find that

$$X = B\,\overline{C} + A\,B$$

Exercise 11

Q.1: Prepare a truth table for the following Boolean expression:

(i) $XYZ + \overline{X}\,\overline{Y}\,\overline{Z}$ (ii) $ABC + A\overline{B}\,\overline{C} + \overline{A}\,\overline{B}\,\overline{C}$

(iii) $(A + D)\,(B + C)$ (iv) $(A + B)\,(A + C)(\overline{A} + \overline{B})$

(v) $AB + \overline{A}\,\overline{B}$

Q.2: Simplifying the following with the help of Boolean algebra Rules:

(i) $AB + AC + ABC$ (ii) $AB + A(\overline{B} + C) + AB\overline{C}$

(iii) $\overline{A}\,BC + A\overline{B}\,C + ABC + AB\overline{C} + \overline{A}\,\overline{B}\,\overline{C}$

(iv) $A\overline{B}\,\overline{C} + \overline{A}\,\overline{B}\,\overline{C} + \overline{A}\,B\overline{C} + \overline{A}\,\overline{B}\,C$

Q.3: Minimize the following expressions:

(a) $X = W\,\overline{Z}\,(W + Y) + WY(\overline{Z} + \overline{W})$

(b) $X = \overline{(A+B)\,(\overline{C})}$

(c) $X = (\overline{A\overline{B}\,C + B\overline{C}})$

(d) $X = (A\overline{B}\,C + \overline{ABC})\,C$

Q.4: Convert the following expression to sum-of-product form.

(i) $(A + B)(\overline{B} + C)(\overline{A} + C)$

(ii) $(A + C)(A\overline{B} + AC)(\overline{A}\,\overline{B} + \overline{C})$

Q.5: Convert the following expression to product-of-sum form:

(i) $A + \overline{A}B + \overline{A}C$ (ii) $(\overline{AB + \overline{C}}) + A\overline{C}B + B$

(iii) $AB + ABC + A\overline{B}\,\overline{C} + A\overline{C}$ (iv) $AB + \overline{A}\,\overline{B}$

Q.6: Express the given function in the product of sums, also draw its circuit and truth table.

$X = A\overline{B}C + \overline{A}\,\overline{B}\,\overline{C} + AB$

Q.7: Draw a logic circuit using only NAND gates for which output expression is X = A C + B C.

Q.8: Draw a logic circuit using only NOR gates for which the output expression is $X = A\overline{C} + \overline{B}C$.

Q.9: Prove the following by use of a truth table:

$\overline{A}B\overline{A} + \overline{A}BC + \overline{A}\,\overline{B}C = \overline{A}B + \overline{A}C$

Q.10: Draw the circuit diagrams of the following:

(i) $F = X\overline{Y}Z + XYZ + \overline{X}YZ$

(ii) $F = AB + (A\overline{B} + \overline{A}B)$

Q.11: Use the Karnaugh map to minimize the following expressions.

(i) $X = AB + A\overline{B} + B\overline{C} + \overline{A}C$

(ii) $X = \overline{A}C + B\overline{C} + \overline{B}\,\overline{C} + AC$

(iii) $X = ABC + \overline{A}BC + A\overline{B}C + \overline{A}\,\overline{B}\,\overline{C}$

(iv) $X = \overline{A}\,\overline{B}\,\overline{C} + ABC + A\overline{B}\,\overline{C} + \overline{A}B\overline{C} + AB\overline{C} + A\overline{B}C + \overline{A}\,\overline{B}C$

(v) $X = \overline{A.B} + (A + B)(\overline{A} + C) + A(\overline{A} + C)$

Q.12: For the given truth tables, find out logical expressions using Boolean algebra and and minimize these expressions by Boolean Rules or Karnaugh map techniques:

Truth Table 20

(i)

A	B	C	Output Y
0	0	0	0
0	0	1	0
0	1	0	0
0	1	1	0
1	0	0	0
1	0	1	0
1	1	0	1
1	1	1	1

Truth Table 21

(ii)

A	B	C	D	Output Y
0	0	0	0	0
0	0	0	1	0
0	0	1	0	1
0	0	1	1	0
0	1	0	0	0
0	1	0	1	0
0	1	1	0	1
0	1	1	1	1
1	0	0	0	0
1	0	0	1	0
1	0	1	0	0
1	0	1	1	0
1	1	0	0	0
1	1	0	1	0
1	1	1	0	1
1	1	1	1	0

Answers:11

Q.1(i)

X	Y	Z	$\overline{X}$	$\overline{Y}$	$\overline{Z}$	XYZ	$\overline{X}\,\overline{Y}\,\overline{Z}$	$XYZ + \overline{X}\,\overline{Y}\,\overline{Z}$
0	0	0	1	1	1	0	1	1
0	0	1	1	1	0	0	0	0
0	1	0	1	0	1	0	0	0
0	1	1	1	0	0	0	0	0
1	0	0	0	1	1	0	0	0
1	0	1	0	1	0	0	0	0
1	1	0	0	0	1	0	0	0
1	1	1	0	0	0	1	0	1

(ii)

A	B	C	$\overline{A}$	$\overline{B}$	$\overline{C}$	ABC	$\overline{A}\,\overline{B}\,\overline{C}$	$\overline{A}\,\overline{B}\,\overline{C}$	$ABC + \overline{A}\,\overline{B}\,\overline{C} + \overline{A}\,\overline{B\,C}$
0	0	0	1	1	1	0	0	1	1
0	0	1	1	1	0	0	0	0	0
0	1	0	1	0	1	0	0	0	0
0	1	1	1	0	0	0	0	0	0
1	0	0	0	1	1	0	1	0	1
1	0	1	0	1	0	0	0	0	0
1	1	0	0	0	1	0	0	0	0
1	1	1	0	0	0	1	0	0	1

(iii)

A	B	C	D	A +D	B + C	(A + B)(B + C)
0	0	0	0	0	0	0
0	0	0	1	1	0	0
0	0	1	0	0	1	0
0	0	1	1	1	1	1
0	1	0	0	0	1	0
0	1	0	1	1	1	1
0	1	1	0	0	1	0
0	1	1	1	1	1	0
1	0	0	0	1	0	1
1	0	0	1	1	0	1
1	0	1	0	1	1	1
1	0	1	1	1	1	1
1	1	0	0	1	1	1
1	1	0	1	1	1	1
1	1	1	0	1	1	1
1	1	1	1	1	1	1

(iv)

A	B	C	$\overline{A}$	$\overline{B}$	A+B	A+C	$\overline{A} + \overline{B}$	$(A+B)(A+C)(\overline{A} + \overline{B})$
0	0	0	1	1	0	0	1	0
0	0	1	1	1	0	1	1	0
0	1	0	1	0	1	0	1	0
0	1	1	1	0	1	1	1	1
1	0	0	0	1	1	1	1	1
1	0	1	0	1	1	1	1	1
1	1	0	0	0	1	1	0	0
1	1	1	0	0	1	1	0	0

(v)

A	B	$\overline{A}$	$\overline{B}$	AB	$\overline{A}\,\overline{B}$	$AB+\overline{A}\,\overline{B}$
0	0	1	1	0	1	1
0	1	1	0	0	0	0
1	0	0	1	0	0	0
1	1	0	0	1	0	1

Q.2: (i) $A(B+C)$ (ii) A (iii) $\overline{A} + A(\overline{B}\,C + B)$

(iv) $\overline{B}\,\overline{C} + \overline{A}\,\overline{C} + \overline{A}\,\overline{B}$

Q.3: (a) $W\overline{Z}$ (b) $\overline{A}\,\overline{B} + C$ (C) BC (d) $(\overline{A} + \overline{B})C$

Q.4: (i) $BC + AC$ (ii) $A\overline{B}$

Q.5: (i)

A	B	C	$\overline{A}$	$\overline{A}B$	$\overline{A}.C$	$A+\overline{A}B+A\overline{C}$
0	0	0	1	0	0	0
0	0	1	1	0	1	1
0	1	0	1	1	0	1
0	1	1	1	1	1	1
1	0	0	0	0	0	1
1	0	1	0	0	0	1
1	1	0	0	0	0	1
1	1	1	0	0	0	1

Hence product-of-sum is $(A + B + C)$

(ii) $A + B + C$ (iii) $A(B + \overline{C})$

A	B	$\overline{A}$	$\overline{B}$	AB	$\overline{A}\,\overline{B}$	$AB + \overline{A}\,\overline{B}$
0	0	1	1	0	1	1
0	1	1	0	0	0	0
1	0	0	1	0	0	0
1	1	0	0	1	0	1

Hence Product of sums $=(A + \overline{B})\,(\overline{A} + B)$

Q.6:

A	B	C	$\overline{A}$	$\overline{B}$	$\overline{C}$	$A\overline{B}C$	$\overline{A}\,\overline{B}\,\overline{C}$	AB	$A\overline{B}C + \overline{A}\,\overline{B}\,\overline{C} + AB$
0	0	0	1	1	1	0	1	1	1
0	0	1	1	1	0	0	0	0	0
0	1	0	1	0	1	0	0	0	0
0	1	1	1	0	0	0	0	0	0
1	0	0	0	1	1	0	0	0	0
1	0	1	0	1	0	1	0	0	1
1	1	0	0	0	1	0	0	1	1
1	1	1	0	0	0	0	0	1	1

Hence Product-of-sums $=(A+B+\overline{C})(A+\overline{B}+C)\ (A+\overline{B}+\overline{C})(\overline{A}+B+C)$

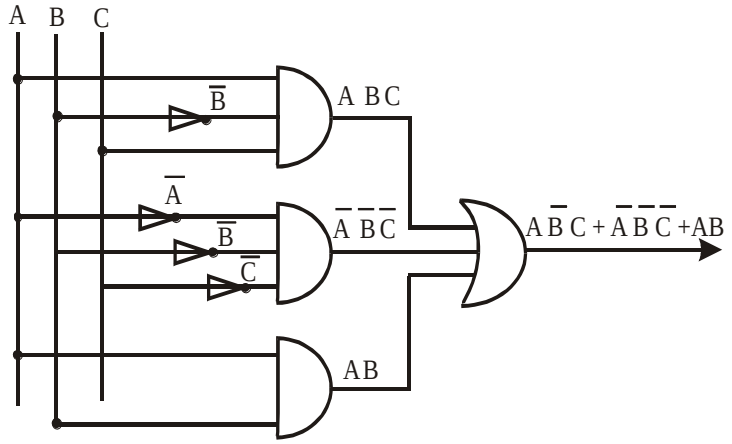

Fig.Circuit

Q.7:

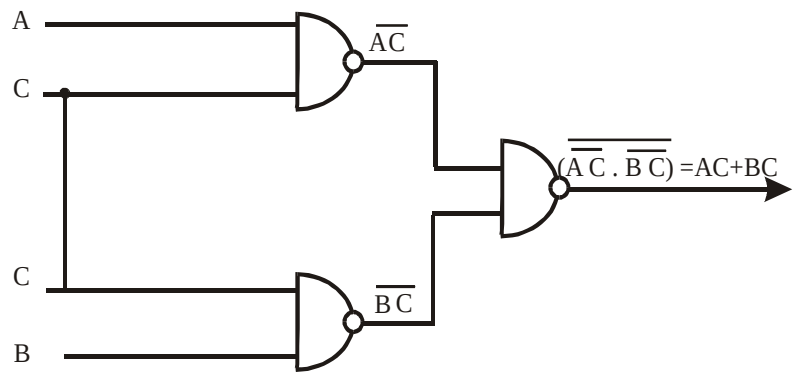

Q.7: Fig..

Q.8:

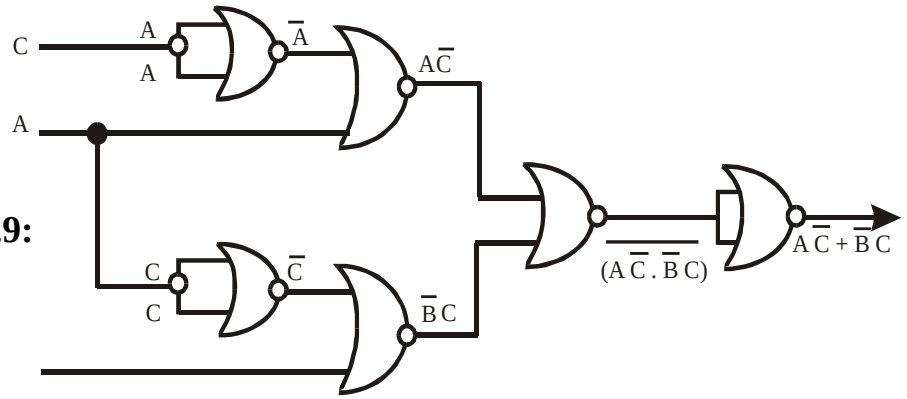

Q.9:

Q.8: Fig..

Truth Table

A	B	C	$\overline{A}$	$\overline{B}$	$\overline{C}$	$\overline{A}B$	$\overline{A}C$	$\overline{A}B\overline{C}$	$\overline{A}BC$	$\overline{A}\,\overline{B}C$	$\overline{A}B\overline{C}+\overline{A}BC+\overline{A}\,\overline{B}C$	$\overline{A}B+\overline{A}C$
0	0	0	1	1	1	0	0	0	0	0	0	0
0	0	1	1	1	0	0	1	0	0	1	1	1
0	1	0	1	0	1	1	0	1	0	0	1	1
0	1	1	1	0	0	1	1	0	1	0	1	1
1	0	0	0	1	1	0	0	0	0	0	0	0
1	0	1	0	1	0	0	0	0	0	0	0	0
1	1	0	0	0	1	0	0	0	0	0	0	0
1	1	1	0	0	0	0	0	0	0	0	0	0

L.H.S. = R.H.S.

Q.10

(i)

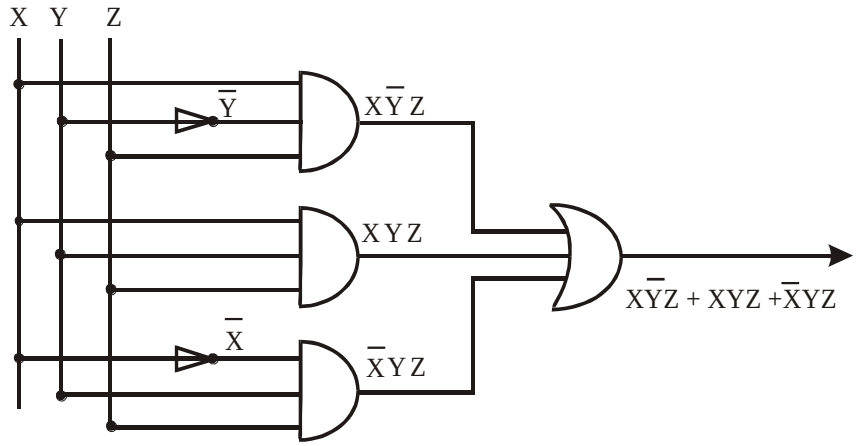

(ii)

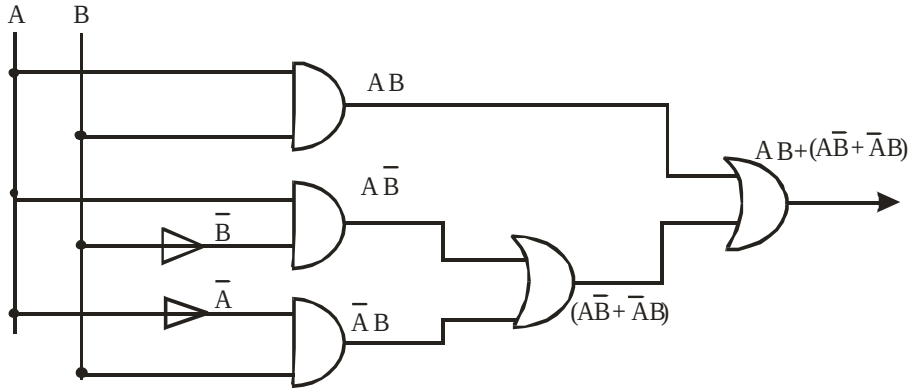

Q.10. Fig. (i) and (ii)

Q.11.

(a) X (i)

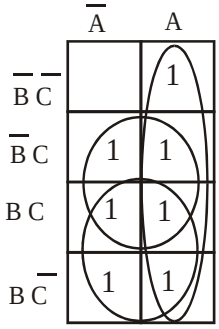

(a)

(ii)

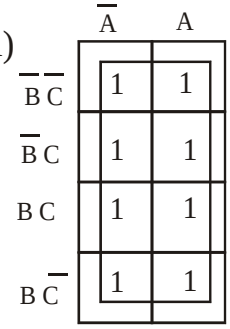

(b)

=C + B +A

(b) X = 1

(iii)

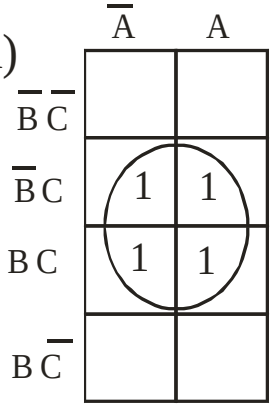

(c)

(iv)

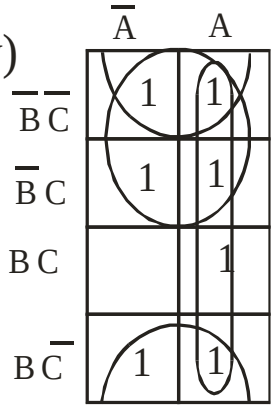

(d)

(c) X =C

(d) X =A + $\overline{B}$ + $\overline{C}$

(v)

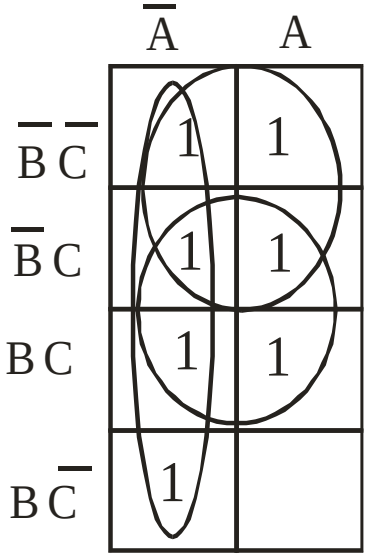

(e)

(a) X = $\overline{A}$ + $\overline{B}$ + $\overline{C}$

Q.12: Boolean expressions by Truth table are:

(i) X = A B $\overline{C}$ + ABC

(ii) $X = \overline{A}\,\overline{B}\,C\,\overline{D} + \overline{A}BC\overline{D} + \overline{A}BCD + ABC\overline{D}$

(i)

	$\overline{A}$	A
$\overline{B}\,\overline{C}$		
$\overline{B}\,C$		
$B\,C$		1
$B\,\overline{C}$		1

(a)

(ii)

	$\overline{A}\,\overline{B}$	$\overline{A}B$	AB	$A\overline{B}$
$\overline{C}\,\overline{D}$				
$\overline{C}\,D$				
$C\,D$		1		
$C\,\overline{D}$	1	1	1	

(b)

(a) $X = AB$ (b) $X = \overline{A}\,C\,\overline{D} + \overline{A}\,BC + BC\,\overline{D}$

Are the logical minimized expressions after applying Karnaugh map.

Short Questions

Q.1: Define Logic Gates.

Q.2: Define following gates and draw logic circuit diagram

(a) OR Gate (b) AND Gate

(c) NOT Gate (d) NAND Gate

(e) NOR Gate

Q.3: Prove by Boolean Algebra $X + XZ = X$

Q.4: Prove by Boolean Algebra rules $X(X + Y) = X$

Q.5: Prove by Boolean Algebra Rules $X + \overline{X}Y = X + Y$

Prove that by Boolean Algebra Rules.

Q.6: $AB + AC + ABC = AB + AC$

Q.7: $XY + YZ + \overline{Y}Z = XY + Z$

Q.8: $X(\overline{X} + Y) = XY$

Q.9: $X + YZ = (X + Y)(X + Z)$

Q.10: Construct a logic diagram for expression $A.B + C$

Q.11: Construct a logic diagram for expression $\overline{AB} = \overline{A}.\overline{B}$

Q.12: Construct a logic diagram for expression $A.B + B.C$

Q.13: Construct a logic diagram for expression $B.(A + C)$

Q.14: Find truth table of $X + Y = Y + X$

Q.15: Prepare a truth table of $XY = YX$

Q.16: Prepare a truth table $X(X + Y) = X$

Q.17: Prepare a truth table of $X + XZ = X$

Q.18: Obtain logic expression for logic diagram

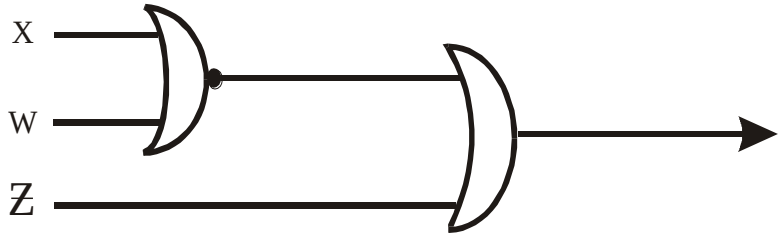

Q.19: Obtain the logic expression for logic diagram.

Q.20: Obtain the logic expression for logic diagram.

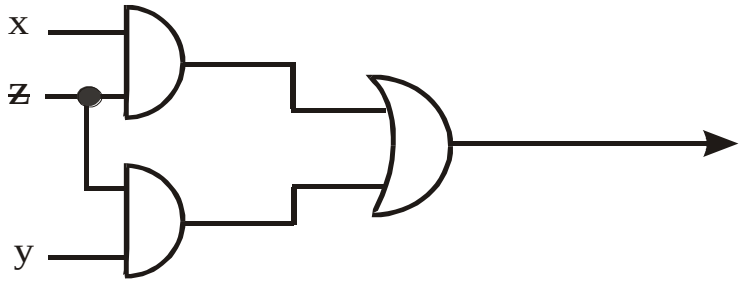

Q.21: Obtain the logic expression for logic diagram.

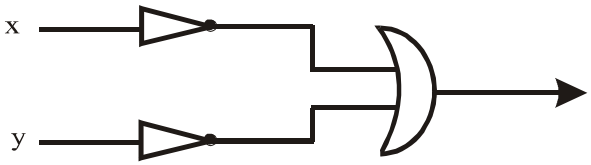

Q.22: Obtain the logic expression for logic diagram.

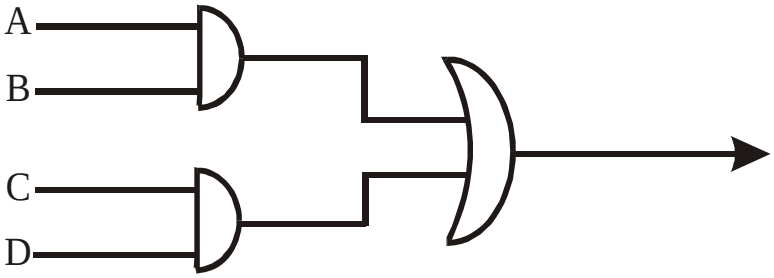

Q.23: Obtain the logic expression for logic diagram.

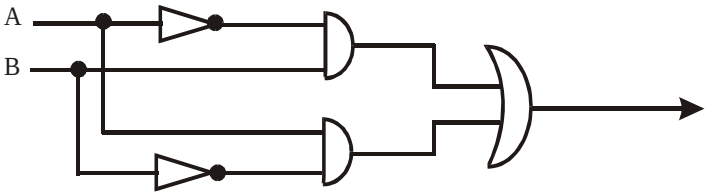

Answers

Q10.

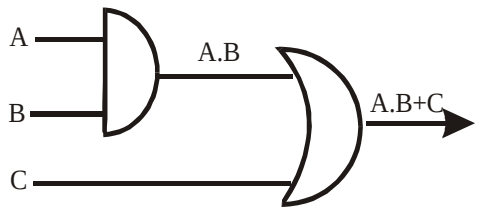

Q11.

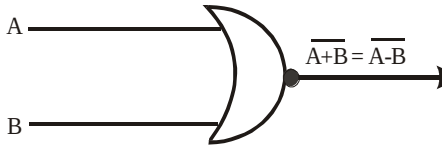

Q12.

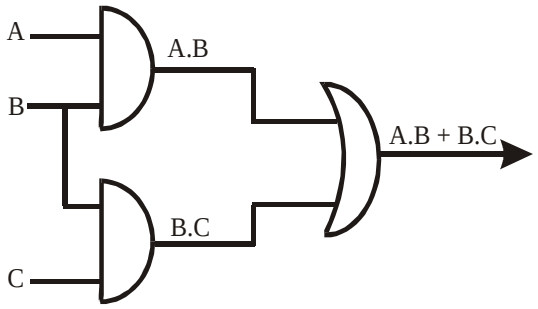

Q13.

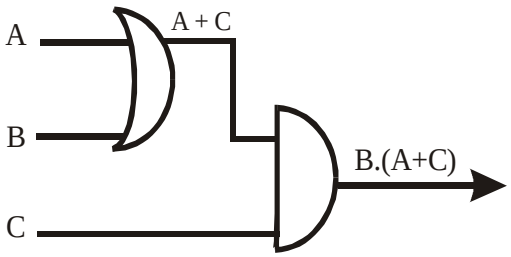

Q14.

X	Y	X +Y	Y +X
0	0	0	0
0	1	1	1
1	0	1	1
1	1	1	1

Q15.

X	Y	XY	YX
0	0	0	0
0	1	0	0
1	0	0	0
1	1	1	1

Q16.

X	Y	X +Y	X(X+Y)	X
0	0	0	0	0
0	1	1	0	0
1	0	1	1	1
1	1	1	1	1

Q17.

X	$\bar{Z}$	$X\bar{Z}$	$X+X\bar{Z}$	X
0	0	0	0	0
0	1	0	0	0
1	0	0	1	1
1	1	1	1	1

Q18.

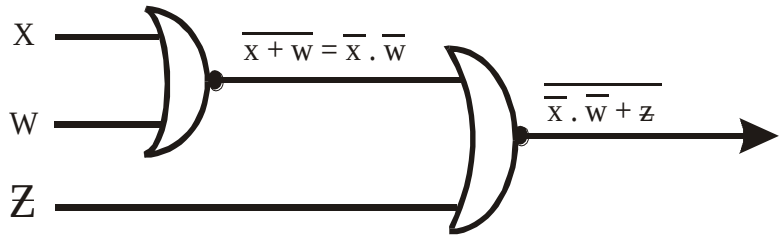

Expression = $\overline{\overline{x} . \overline{w} + z}$

Q19.

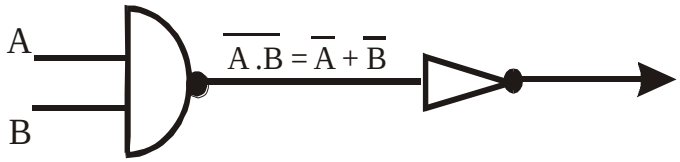

Expression = $\overline{\overline{A} + \overline{B}}$ = A .B

Q20.

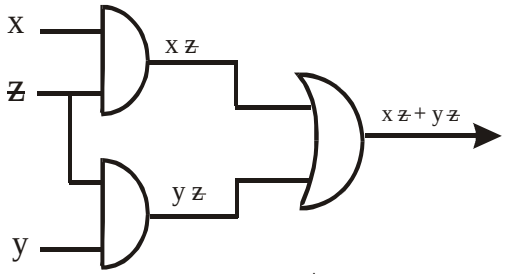

Expression = x z + y z

Q21.

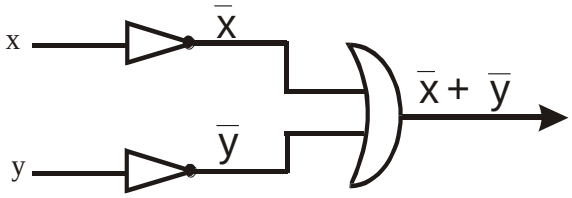

Expression = $\overline{x} + \overline{y}$

Q22.

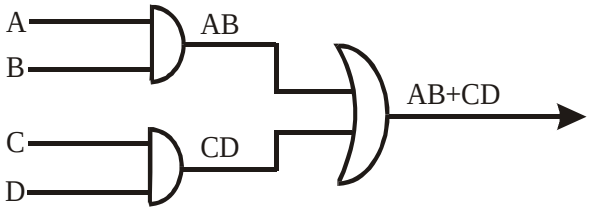

Q23.

Expression = AB+CD

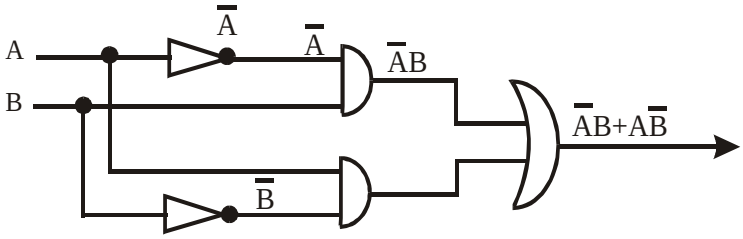

Expression = $\overline{A}B+A\overline{B}$

OBJECTIVE TYPE QUESTIONS

Q.1 Each questions has four possible answers. Choose the correct answer and encircle it.

1. Boolean Algebra $X + \overline{X}Y$ is equal to:

   (a) X (b) $\overline{X}$ (c) $X + Y$ (d) $\overline{X} + Y$

2. According to Boolean Algebra $X + \overline{X}$ is equal to:

   (a) X (b) $\overline{X}$ (c) 0 (d) 1

3. In Boolean Algebra $\overline{X+Y}$ is equal to:

   (a) $\overline{X} + \overline{Y}$ (b) $\overline{X} . \overline{Y}$ (C) $X . Y$ (d) $X + Y$

4. If the switch is on it is represent by:

   (a) 0 (b) 1 (c) OR (d) NOT

5. If the switch is off it is represented by:

   (a) 0 (b) 1 (c) OR (d) NOT

6. Symbol 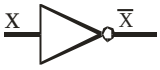

is used for:

   (a) NOT gate (13) NOR (c) OR(d) NAND

7. An AND gate performs logical multiplication on:

   (a) Inputs (b) Outputs (c) OR gates (d) NOR gates

8. 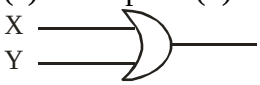

$X + Y$ is the symbol for the logic:

   (a) OR gate (b) NOR gate (c) NAND gate (d) AND gate

9. $X.(\overline{X} + Y)$ equal to:

   (a) $X\ Y$ (b) $X . \overline{X}$ (c) $X. \overline{X} + X.Y$ (d) $X + Y$

10. $X + XZ$ is equal to:

   (a) Z (b) X (c) $X + Z$ (d)

ANSWERS

1.	c	2.	d	3.	b	4.	b	5.	b
6.	a	7.	a	8.	a	9.	a	10.	b

<><><>