BME 105: Genetics in the Genomics Era

Lecture 2: Genotype probabilities and pedigrees

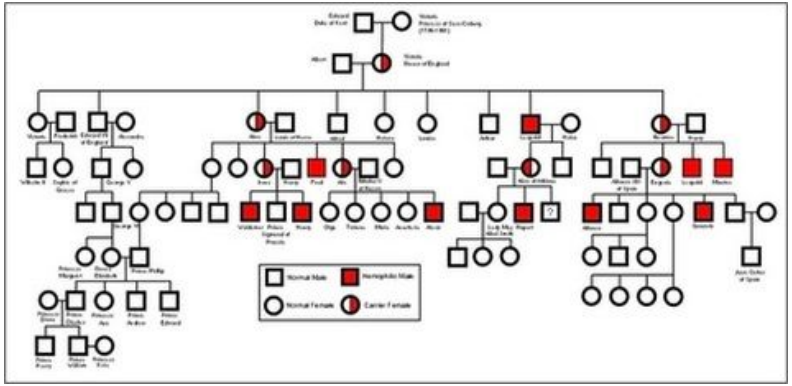

Instructor: Dr. Shelbi Russell,
Assistant Professor

Course website on canvas.ucsc.edu

Some slides modified from Angela Brooks and Rohinton Kamakaka

Lecture 2 Learning Objectives

- Understand how the product rule in probability (i.e., "and" statements) is used to calculate the chance of <u>independent</u> events occurring.
- Describe biological processes that can be modeled by the product rule
- Understand how the sum rule in probability (i.e., "or" statements) is used to calculate the chance of <u>mutually exclusive</u> events occuring.
- Describe biological processes can be modeled by the sum rule.
- Be able to articulate why human genetics has traditionally used pedigrees to track Mendelian traits.
- Be able to read a pedigree to infer the nature of the trait (dominant vs recessive) and calculate the probability of an affected offspring for a given couple.

Punnett square recap

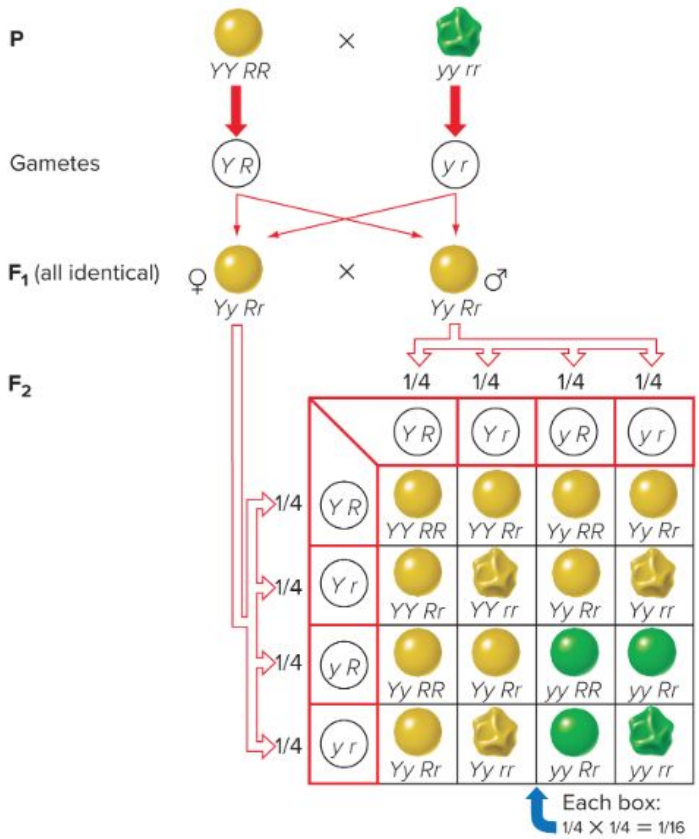

<u>Law of independent segregation</u>: During gamete formation, different pairs of **alleles segregate independently** of each other

<u>Law of independent assortment</u>: During gamete fusion, (unlinked) **traits assort independently** of each other

Punnett square recap

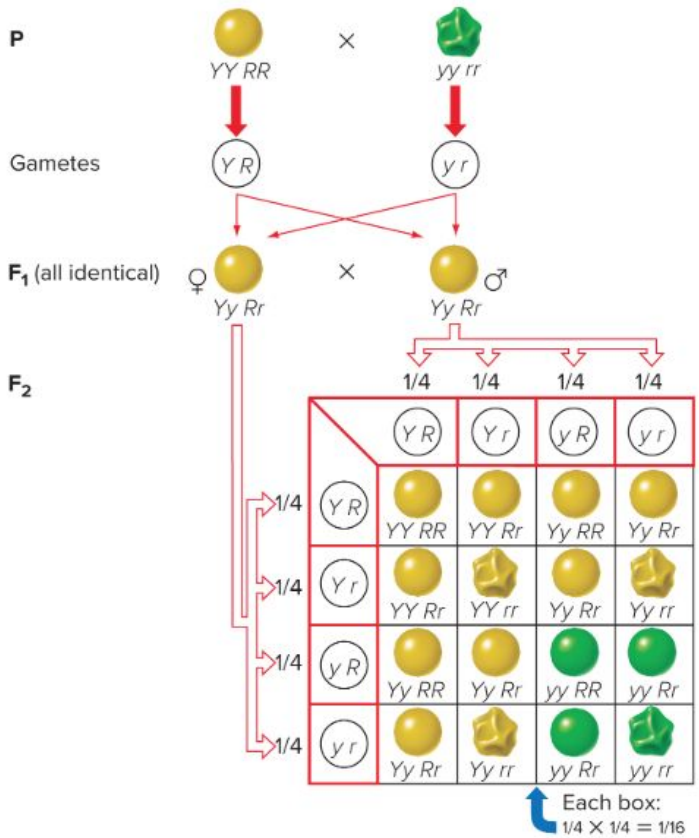

<u>Law of independent assortment</u>: During gamete fusion, (unlinked) **traits assort independently** of each other

"Recombinant types" are new trait/phenotype combinations

⟶ not to be confused with "recombinant chromosomes" (see lecture 7, at the beginning of the next section)

What is the probability of getting a recombinant phenotype of green and round peas in the F2?

<u>Parental and Recombinant phenotypes</u>

Type	Genotype	Phenotype	Number	Phenotypic Ratio
Parental	*Y– R–*	yellow round	315	9/16
Recombinant	*yy R–*	green round	108	3/16
Recombinant	*Y– rr*	yellow wrinkled	101	3/16
Parental	*yy rr*	green wrinkled	32	1/16

Punnett square probabilities: the Product Rule

Product Rule: Probability of two or more ***independent events*** **occurring together** is the product of the probabilities that each event occurs by itself

Probability of event 1 **and** event 2 = probability of event 1 x probability of event 2

P(A and B) = P(A) * P(B), **if A and B are independent**

Punnett square probabilities: the Product Rule

Product Rule: Probability of two or more ***independent events* occurring together** is the product of the probabilities that each event occurs by itself

Probability of event 1 **and** event 2 = probability of event 1 x probability of event 2

P(A and B) = P(A) * P(B), if A and B are independent

How does this fit with biology?

→ Meiotic divisions during gametogenesis are independent events

→ Gamete fusion (fertilization) between the maternal **and** paternal alleles

Example: In a hybrid (heterozygous, *Yy*) plant, the probability of gamete *Y* = ½, and probability of gamete *y* is ½

Therefore chance of *Y* egg **and** *Y* sperm coming together is ½ x ½ = ¼

Chance of *Y* egg **and** *y* sperm coming together is ½ x ½ = ¼

Punnett square probabilities: the Sum Rule

Sum Rule: Probability of either of two ***mutually exclusive events*** (cannot occur at the same time) is the sum of their individual probabilities

Probability of event 1 **or** event 2 = probability of event 1 + probability of event 2

P(A or B) = P(A) + P(B), **if A and B are mutually exclusive (cannot both occur)**

Punnett square probabilities: the Sum Rule

Sum Rule: Probability of either of two ***mutually exclusive events*** (cannot occur at the same time) is the sum of their individual probabilities

Probability of event 1 **or** event 2 = probability of event 1 + probability of event 2

P(A or B) = P(A) + P(B), if A and B are mutually exclusive (cannot both occur)

How does this fit with biology?

→ Either the maternal **or** paternal copy of each homologous chromosome is inherited an offspring individual (not both)

Example: If a *Yy* hybrid self-fertilizes, what is the probability of progeny having the same genotype (*Yy*)? This could happen by two mutually exclusive events.

Chance of *Y* egg **and** *y* sperm coming together is ½ x ½ = ¼

Chance of *y* egg **and** *Y* sperm coming together is ½ x ½ = ¼

Chance of (*Y* egg and *y* sperm) **or** (*y* egg and *Y* sperm) = ¼ + ¼ = ½

Punnett square probabilities

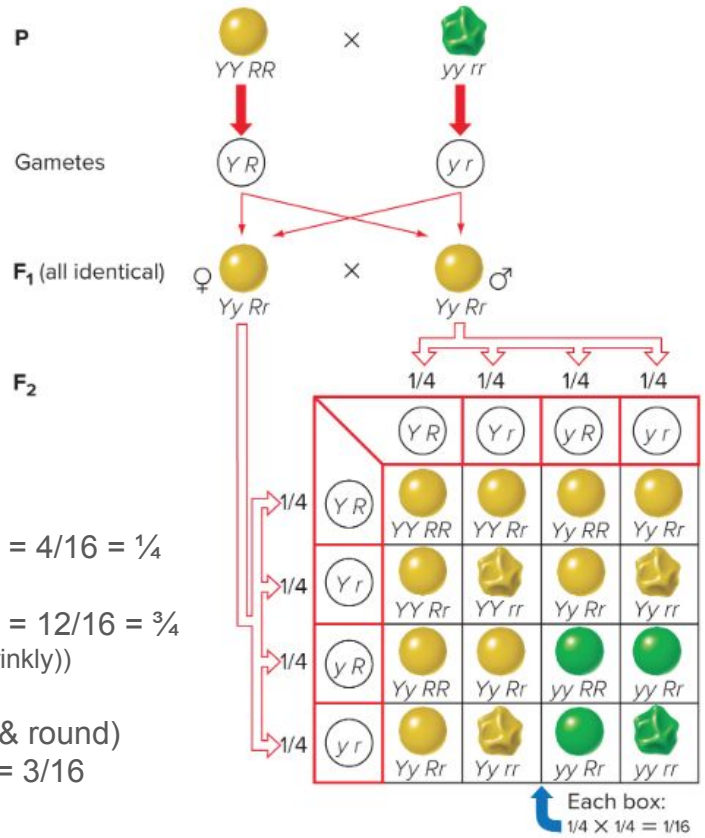

P(green) = 4/16 = ¼

P(round) = 12/16 = ¾
(= 1- P(wrinkly))

P(green & round)
= ¼ * ¾ = 3/16

Law of independent assortment: During gamete formation, different pairs of alleles segregate independently of each other

What is the probability of getting a recombinant phenotype of green **and** round peas in the F2?

Parental and Recombinant phenotypes

Type	Genotype	Phenotype	Number	Phenotypic Ratio
Parental	*Y– R–*	yellow round	315	9/16
Recombinant	*yy R–*	green round	108	3/16
Recombinant	*Y– rr*	yellow wrinkled	101	3/16
Parental	*yy rr*	green wrinkled	32	1/16

Punnett square probabilities

Law of independent assortment: During gamete formation, different pairs of alleles segregate independently of each other

General Probability Rules

Rule 1: The probability of an impossible event is zero; the probability of a certain event is one. Therefore, for any event A, the range of possible probabilities is: $0 \leq P(A) \leq 1$

Rule 2: For S the sample space of all possibilities, P(S) = 1. That is the sum of all the probabilities for all possible events is equal to one. Recall the party affiliation above: if you have to belong to one of the three designated political parties, then the sum of P(R), P(D) and P(I) is equal to one.

inant
F2?

es

P(green) = 4/16 = ¼

P(round) = 12/16 = ¾
(= 1- P(wrinkly))

P(green & round)
= ¼ * ¾ = 3/16

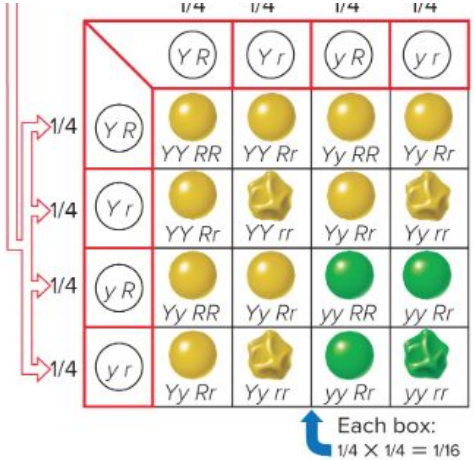

Type	Genotype	Phenotype	Number	Phenotypic Ratio
Parental	*Y– R–*	yellow round	315	9/16
Recombinant	*yy R–*	green round	108	3/16
Recombinant	*Y– rr*	yellow wrinkled	101	3/16
Parental	*yy rr*	green wrinkled	32	1/16

Probabilities without the Punnett squares

P

F1

F2

P(F2 green **<u>and</u>** round peas)=?

Probabilities without the Punnett squares

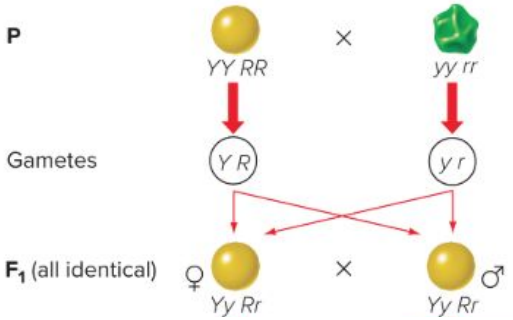

Two homozygous lines crossed (one dominant, one recessive)

⇒ all F1 offspring will be heterozygous YyRr

⇒ all F1s will display the dominant phenotype

F2

P(F2 green **<u>and</u>** round peas)=?

Probabilities without the Punnett squares

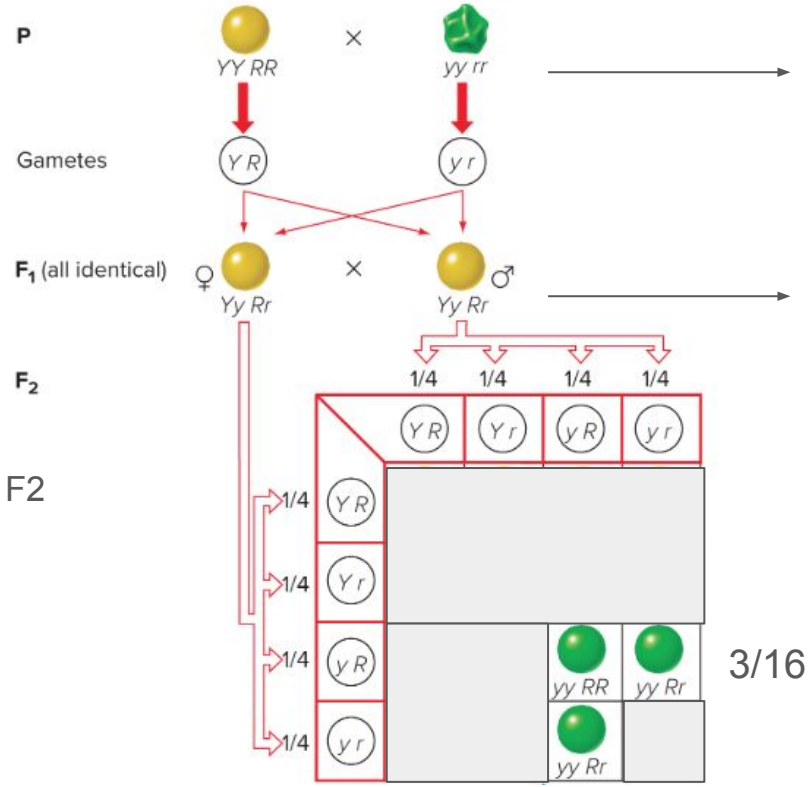

F2

3/16

P(F2 green **<u>and</u>** round peas)= ¼ * ¾ = 3/16

Two homozygous lines crossed (one dominant, one recessive)

⇒ all F1 offspring will be heterozygous YyRr

⇒ all F1s will display the dominant phenotype

F1 heterozygotes crossed

=> All genotype combos will result

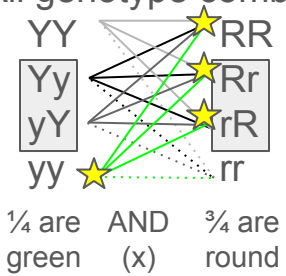

Only yy are green → only ¼ are yy

(yy with rr, Rr, rR, or RR = 4/16 = 1/4)

Any R- is round → 1-¼ (rr, wrinkled) = ¾ R-

(R- with YY, Yy, yY, or yy = 12/16 = 3/4)

Probabilities without the Punnett squares

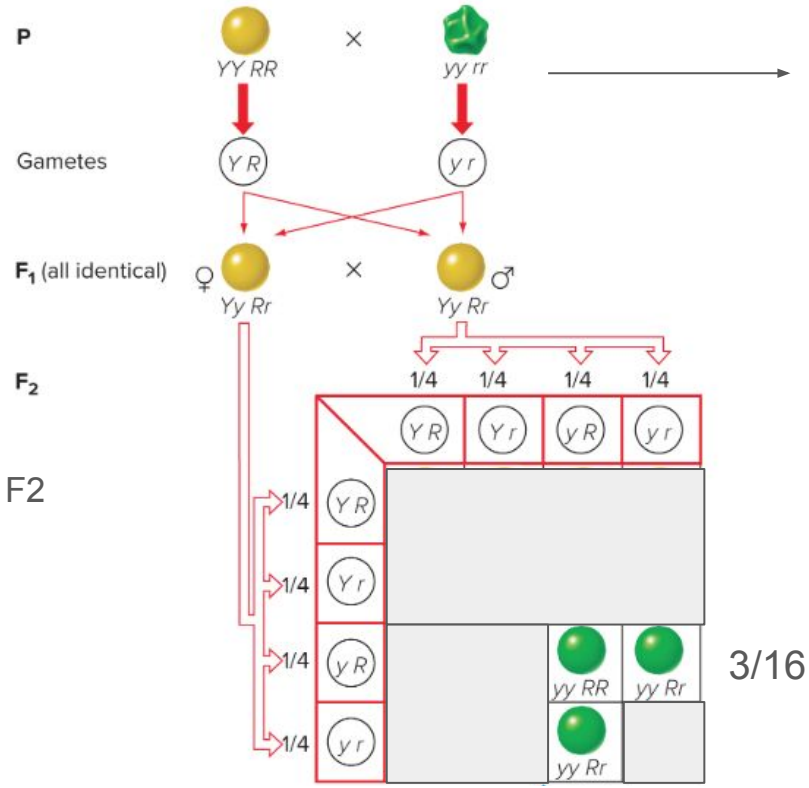

Two homozygous lines crossed (one dominant, one recessive)

⇒ all F1 offspring will be heterozygous YyRr

⇒ all F1s will display the dominant phenotype

Only yy are green → only ¼ are yy
(yy with rr, Rr, rR, or RR = 4/16 = 1/4)

Any R- is round → 1-¼ (rr, wrinkled) = ¾ R-
(R- with YY, Yy, yY, or yy = 12/16 = 3/4)

P(F2 green **<u>and</u>** round peas)= ¼ * ¾ = 3/16

Molecular function of a Mendelian trait

Both r and y alleles knockdown gene function

One functional copy rescues phenotype, explaining dominance

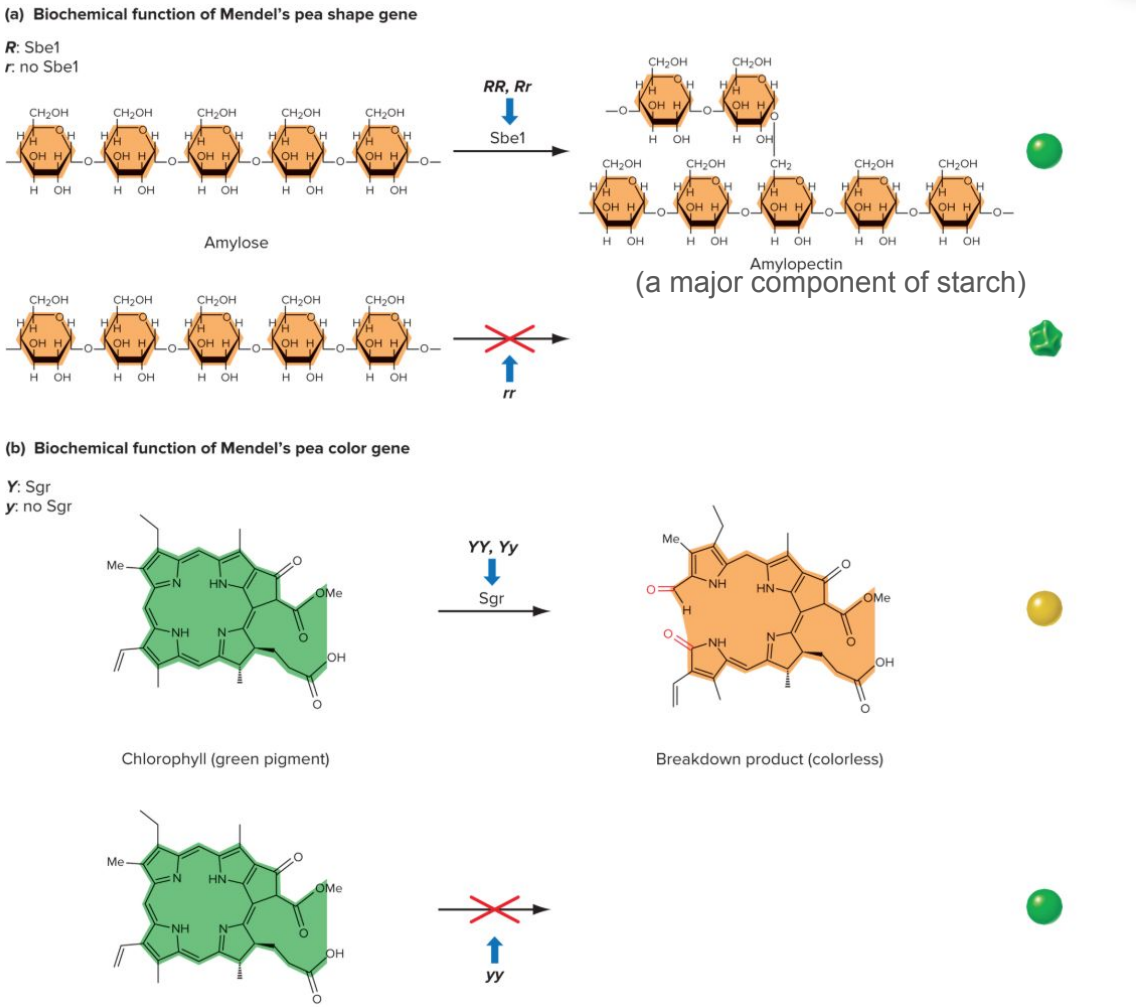

Mendelian traits in *Drosophila: curly* mutations

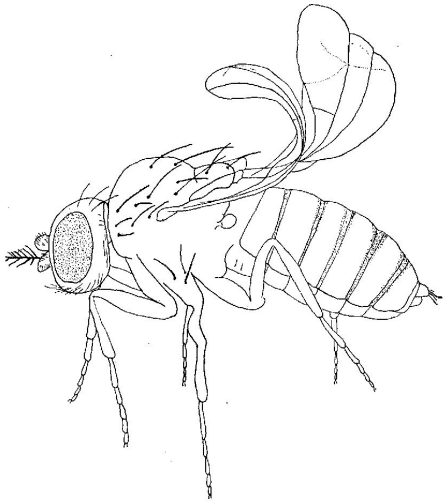

FIGURE 3.—Curly-winged fly.

wild, which is typical of a simple dominant heterozygous character (table 1).

TABLE 1

Offspring from cross of curly to wild.

PARENTS	F_1 CURLY	F_1 WILD	TOTAL
Curly × wild.	1023	991	2014

THE GENETICS OF CURLY WING IN DROSOPHILA. ANOTHER CASE OF BALANCED LETHAL FACTORS[1]

LENORE WARD

4404 Morningside Avenue, Sioux City, Iowa

Received January 3, 1923

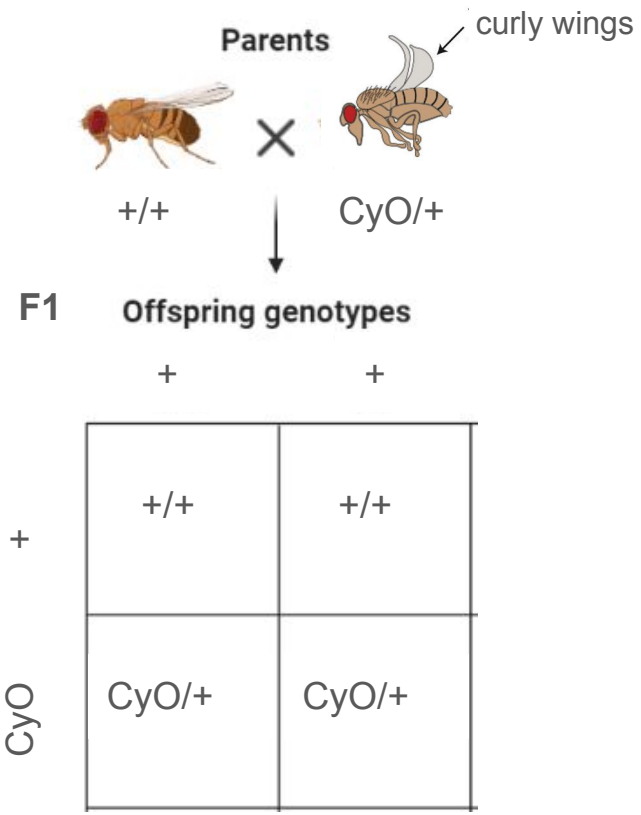

Mendelian traits in *Drosophila: curly* mutations

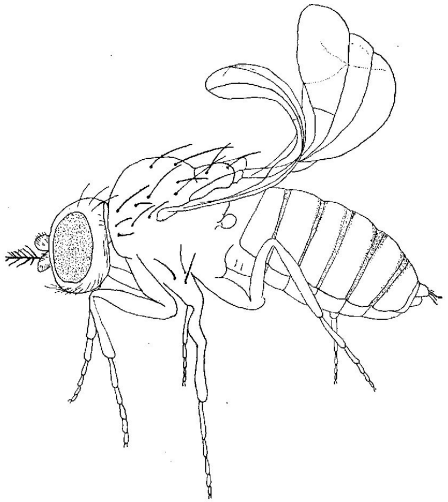

FIGURE 3.—Curly-winged fly.

wild, which is typical of a simple dominant heterozygous character (table 1).

TABLE 1

Offspring from cross of curly to wild.

PARENTS	F_1 CURLY	F_1 WILD	TOTAL
Curly × wild.	1023	991	2014

THE GENETICS OF CURLY WING IN DROSOPHILA. ANOTHER CASE OF BALANCED LETHAL FACTORS[1]

LENORE WARD

4404 Morningside Avenue, Sioux City, Iowa

Received January 3, 1923

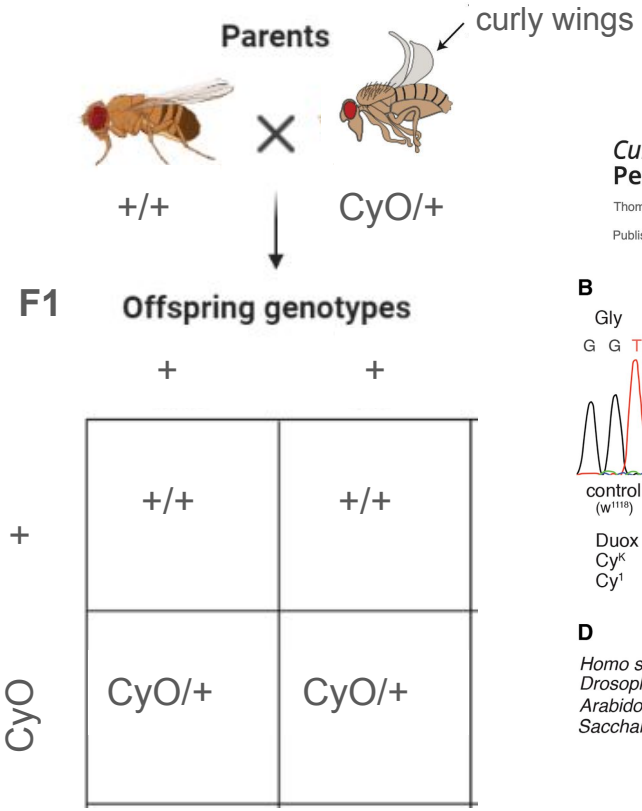

Curly Encodes Dual Oxidase, Which Acts with Heme Peroxidase Curly Su to Shape the Adult *Drosophila* Wing

Thomas Ryan Hurd, Feng-Xia Liang, Ruth Lehmann

Published: November 20, 2015 • https://doi.org/10.1371/journal.pgen.1005625

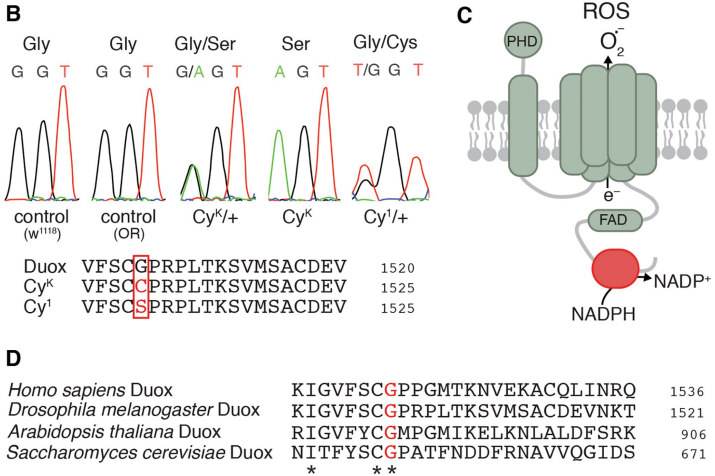

Active learning: visible dominant genotypes in flies

The fruit fly life cycle

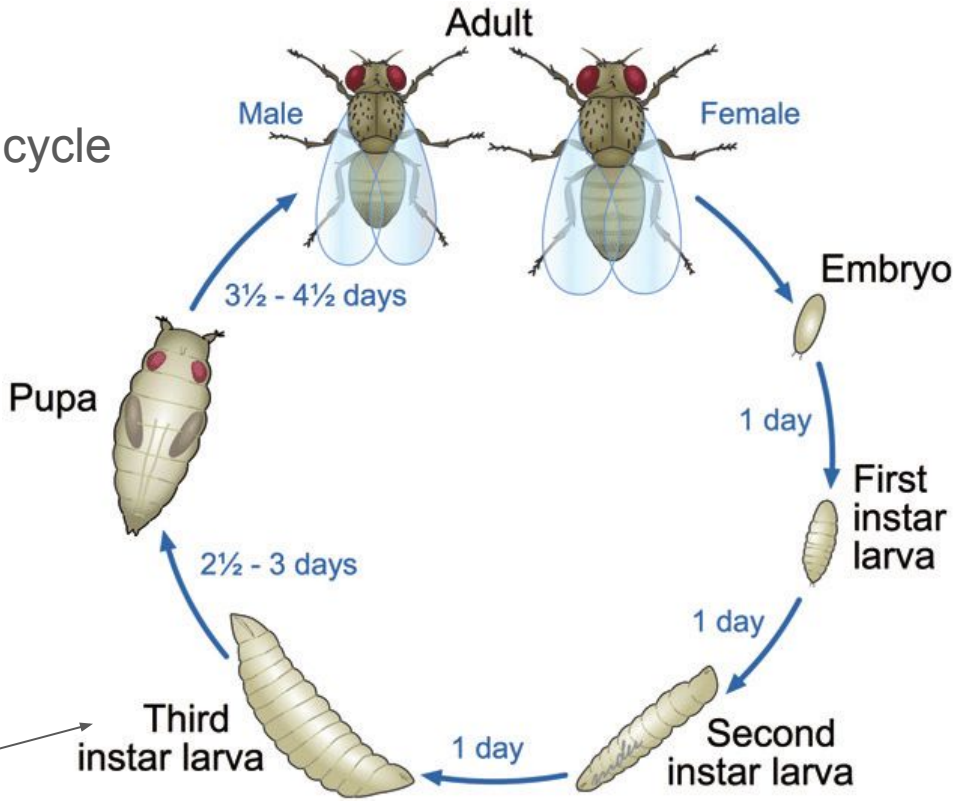

these larvae are big enough to see in the food (unaided)

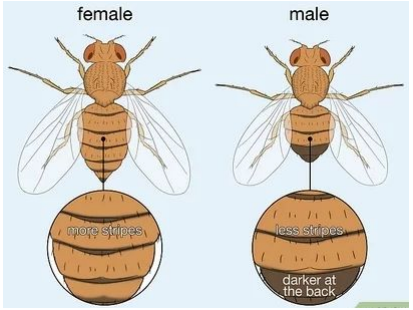

What phenotypes can you see?

- ***Curly-vs-straight wings (2nd chromosome)***
- *White-vs-red eyes (X chromosome)*
  - *We'll cover the X-chromosome in lecture 7*

Mendelian traits in *Drosophila: curly* mutations

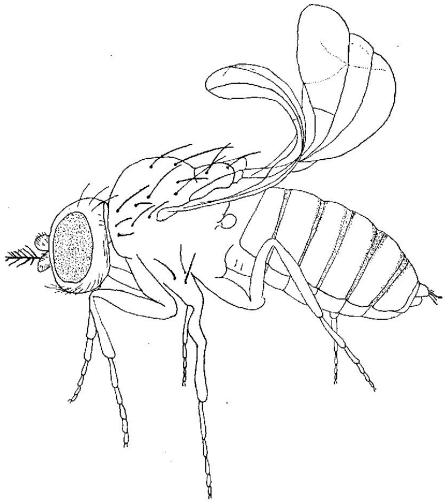

FIGURE 3.—Curly-winged fly.

wild, which is typical of a simple dominant heterozygous character (table 1).

TABLE 1

Offspring from cross of curly to wild.

PARENTS	F_1 CURLY	F_1 WILD	TOTAL
Curly × wild.	1023	991	2014

THE GENETICS OF CURLY WING IN DROSOPHILA. ANOTHER CASE OF BALANCED LETHAL FACTORS[1]

LENORE WARD

4404 Morningside Avenue, Sioux City, Iowa

Received January 3, 1923

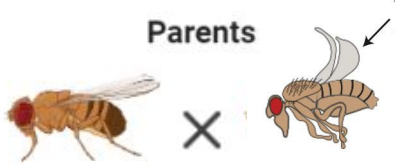

F1 **Offspring genotypes**

	+	+
+	+/+	+/+
CyO	CyO/+	CyO/+

- CyO is homozygous lethal
- What are the possible F2 genotypes?
  - Which are viable?

F1s crossed: CyO/+ x CyO/+ +/+ x CyO/+ +/+ x +/+

Mendelian traits in *Drosophila: curly* mutations

F1

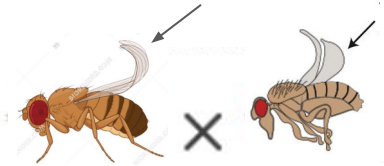

CyO/+ × CyO/+

+/+ × CyO/+

+/+ × +/+

F2

	CyO	+
+	CyO/+	+/+
CyO	CyO/ CyO	CyO/+

	+	+
+	+/+	+/+
CyO	CyO/+	CyO/+

	+	+
+	+/+	+/+
+	+/+	+/+

- CyO is homozygous lethal
- What are the possible F2 genotypes?

F2s: **CyO/CyO**, **CyO/+, +/+**

Mendelian traits in *Drosophila: curly* mutations

F1

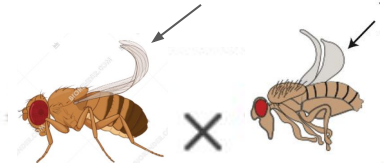

CyO/+ × CyO/+

+/+ × CyO/+

+/+ × +/+

F2

	CyO	+
+	CyO/+	+/+
CyO	CyO/ CyO	CyO/+

	+	+
+	+/+	+/+
CyO	CyO/+	CyO/+

	+	+
+	+/+	+/+
+	+/+	+/+

- CyO is homozygous lethal
- What are the possible F2 genotypes?
- Which are viable?

F2s: **CyO/CyO**, **CyO/+, +/+**

Mendelian traits in *Drosophila: curly* mutations

F1

CyO/+ × CyO/+	+/+ × CyO/+	+/+ × +/+

F2

	CyO	+
+	CyO/+	+/+
CyO	CyO/CyO	CyO/+

¼ **CyO/CyO**, ½ **CyO/+**, ¼ **+/+**

	+	+
+	+/+	+/+
CyO	CyO/+	CyO/+

½ **CyO/+**, ½ **+/+**

	+	+
+	+/+	+/+
+	+/+	+/+

1 **+/+**

- CyO is homozygous lethal
- What are the possible F2 genotypes?
- Which are viable?
- What is the probability of viability in the CyO/+ x CyO/+ cross?

½ + ¼ = ¾
CyO/+ or ++ are viable

or P(viable) = 1-P(inviable)

Mendelian traits in *Drosophila: curly* mutations

F1

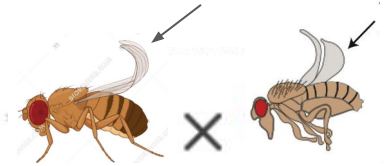

CyO/+ × CyO/+

F2

	CyO	+
+	CyO/+	+/+
CyO	CyO/CyO	CyO/+

¼ **CyO/CyO**, ½ **CyO/+**, ¼ **+/+**

⅓ of <u>living</u> offspring are wild type

- CyO is homozygous lethal
- What is the probability of wild type among the living flies produced from the CyO/+ x CyO/+ cross?

Only 3 living genotypes
+/+ is one of three
P(+/+ | living) = ⅓

⇒ we will cover this more in lecture 3 - this is conditional probability

Detecting and tracking Mendelian traits in humans

TABLE 2.1 Some of the Most Common Single-Gene Traits in Humans

Disease	Effect	Incidence of Disease
Caused by a Recessive Allele		
Thalassemia (chromosome 16 or 11)	Reduced amounts of hemoglobin; anemia, bone and spleen enlargement	1/10 in parts of Italy
Sickle-cell anemia (chromosome 11)	Abnormal hemoglobin; sickle-shaped red cells, anemia, blocked circulation; increased resistance to malaria	1/625 African-Americans
Cystic fibrosis (chromosome 7)	Defective cell membrane protein; excessive mucus production; digestive and respiratory failure	1/2000 Caucasians
Tay-Sachs disease (chromosome 15)	Missing enzyme; buildup of fatty deposit in brain; buildup disrupts mental development	1/3000 Eastern European Jews
Phenylketonuria (PKU) (chromosome 12)	Missing enzyme; mental deficiency	1/10,000 Caucasians
Caused by a Dominant Allele		
Hypercholesterolemia (chromosome 19)	Missing protein that removes cholesterol from the blood; heart attack by age 50	1/122 French Canadians
Huntington disease (chromosome 4)	Abnormal Huntingtin protein; progressive mental and neurological damage; neurologic disorders by ages 40–70	1/25,000 Caucasians

Detecting and tracking Mendelian traits in humans

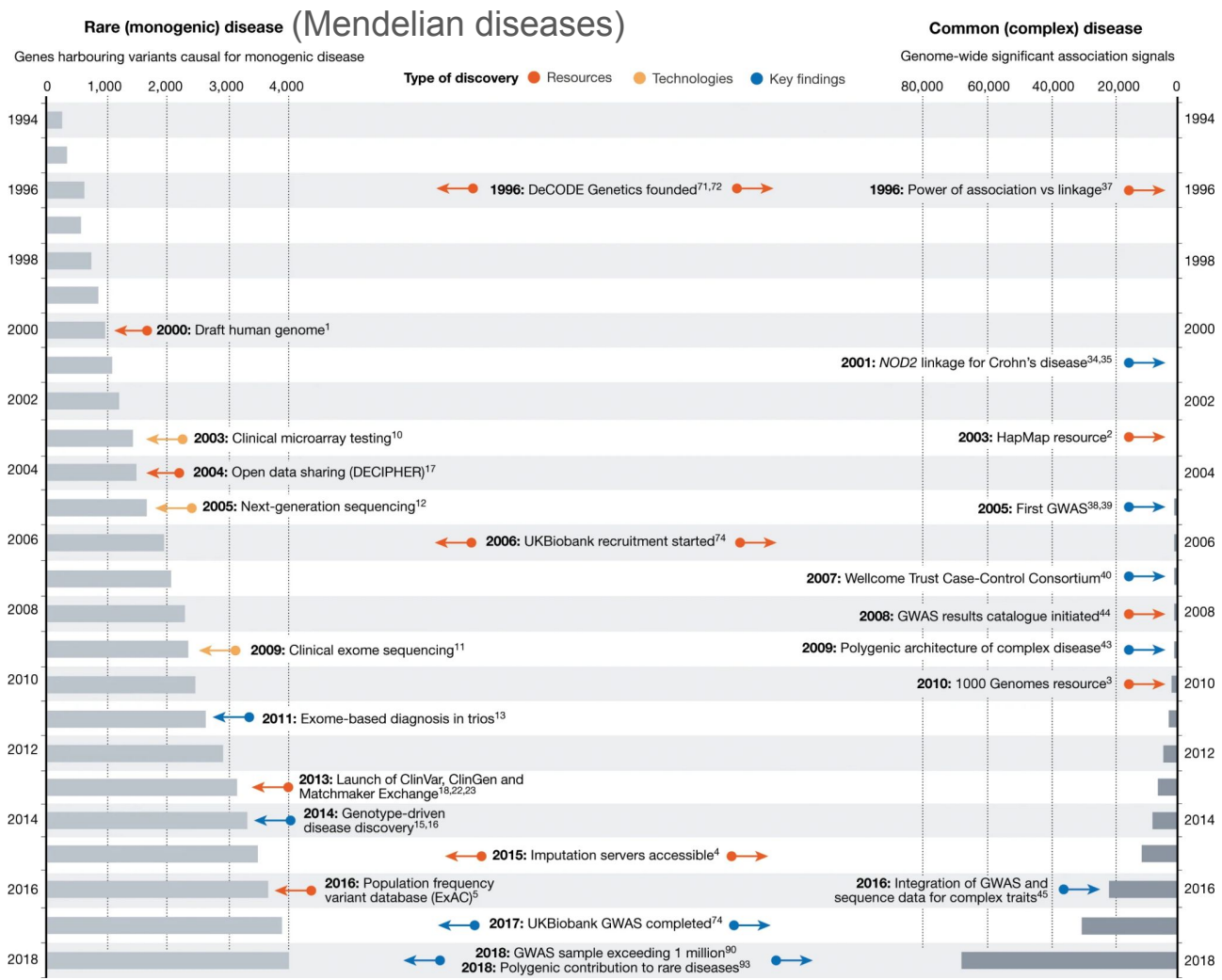

Claussnitzer et al. 2020 Nature

What are some challenges in assaying human gene function?

- Reproduction be cannot restricted or controlled
  - Trait mapping is aided by controlled crosses, which are not ethically possible in humans

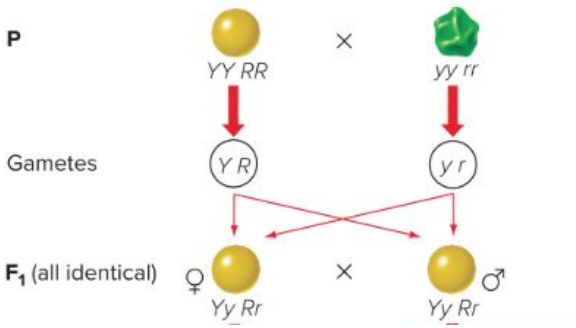

What are some challenges in assaying human gene function?

- Reproduction be cannot restricted or controlled
  - Trait mapping is aided by controlled crosses, which are not ethically possible in humans

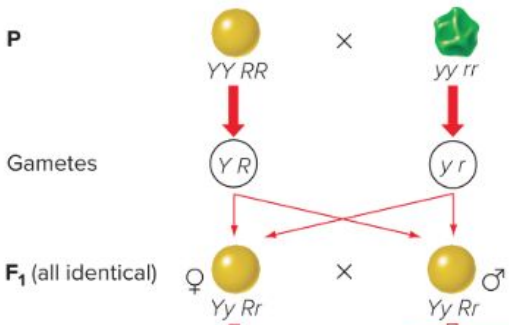

History of eugenics revealed the errors of human selective breeding

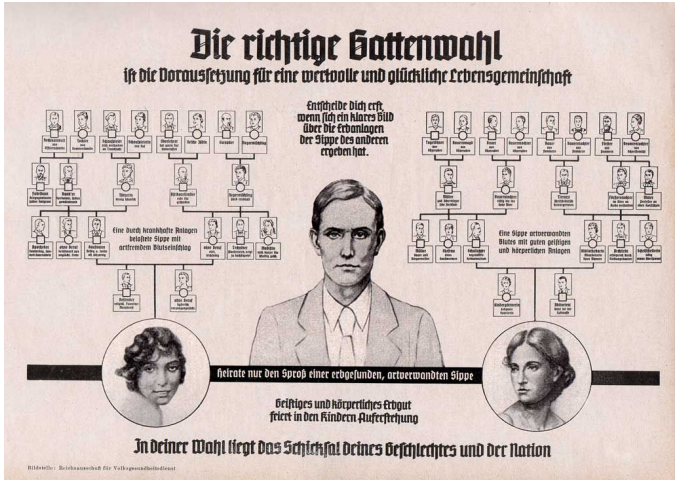

The Holocaust
"*The right choice of spouse*"
(from an exhibition in Vienna's Otto Wagner Hospital)

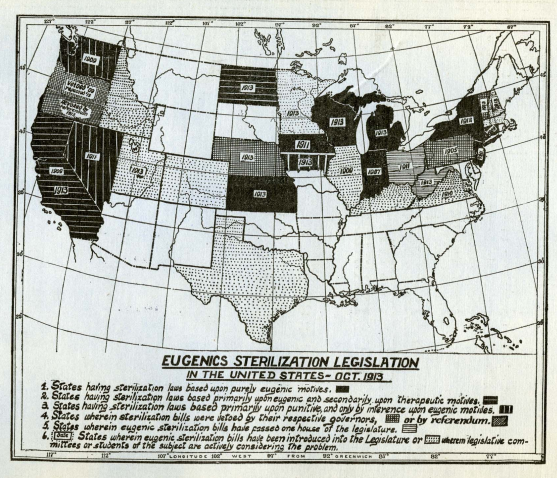

Buck v. Bell - a 1927 case that upheld Virginia's Eugenical Sterilization Act (of 1924)

What are some challenges in assaying human gene function?

- Reproduction be cannot restricted or controlled
  - Trait mapping is aided by controlled crosses, which are not ethically possible in humans

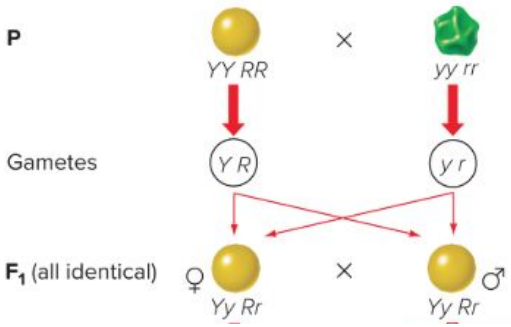

History of eugenics

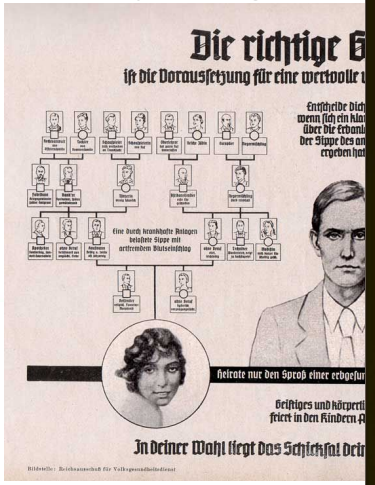

The Holocaust

"*The right choice of s*

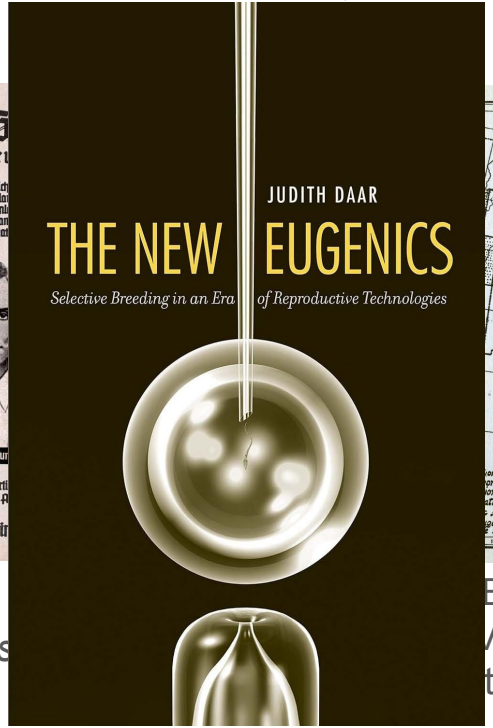

selective breeding

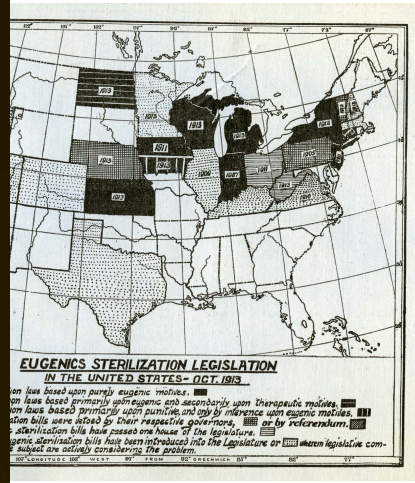

Bell - a 1927 case that
Virginia's Eugenical
tion Act

What are some challenges in assaying human gene function?

- Reproduction be cannot restricted or controlled
  - Trait mapping is aided by controlled crosses, which are not ethically possible in humans

- Mendelian traits map well onto pedigrees, and complex traits don't
  - Mendelian traits can be tracked by segregation, independent assortment, and dominance
  - While the alleles underlying complex trait alleles follow Mendelian inheritance, their expressed phenotypes don't

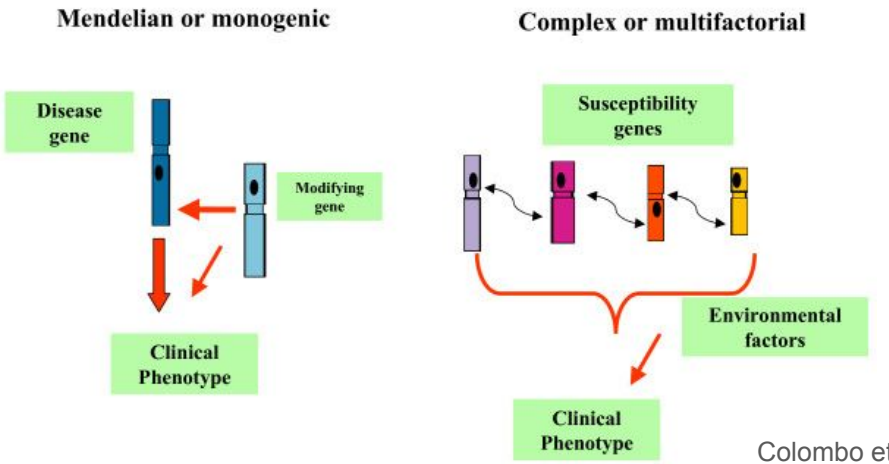

Colombo et al. 2009 Cardiovascular Ultrasound

What are some challenges in assaying human gene function?

- Reproduction be cannot restricted or controlled
  - Trait mapping is aided by controlled crosses, which are not ethically possible in humans

- Mendelian traits map well onto pedigrees (but complex traits don't)
  - Mendelian traits can be tracked by segregation, independent assortment, and dominance
  - While the alleles underlying complex trait alleles follow Mendelian inheritance, their expressed phenotypes don't

- Reliable data across multiple generations
  - Traditionally, pedigrees have been used to map Mendelian traits
    - Many individuals across many generations is required for statistical power
  - Genomics enables pedigree-free trait mapping (which we will get to later in the course)

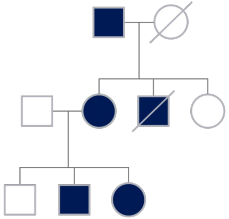

Trait inheritance patterns can be analyzed through pedigrees

Pedigree: a chart/map that diagrams the inheritance of a trait or health condition through generations of a family.

- Shows the relationships among family members
  - Parent, sibling, cousin, etc. are apparent by visual inspection

- Indicates which individuals have trait(s) of interest
  - Can help determine how a trait or condition might be passed down

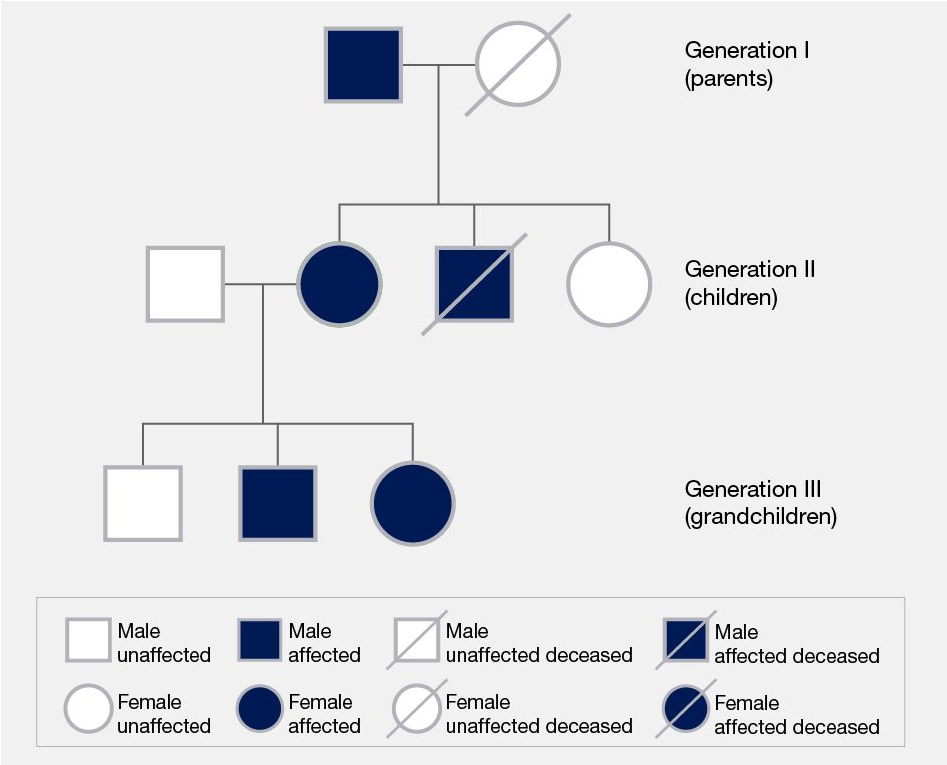

Darryl Leja, NHGRI

Symbols used in pedigree analysis

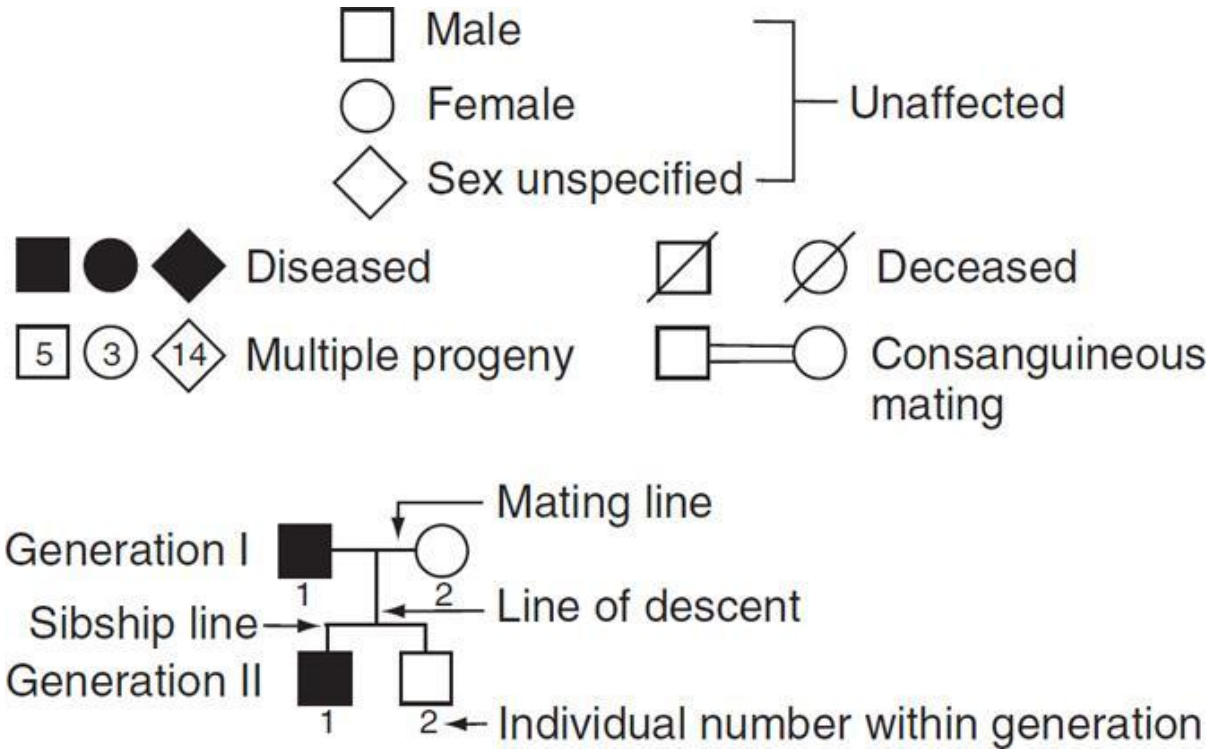

Goals of pedigree analysis

1. Determine the mode of inheritance:
   a. Dominant
   b. Recessive
   c. Sex-linked
   d. Autosomal
   e. Mitochondrial (maternal transmission)
   f. Complex

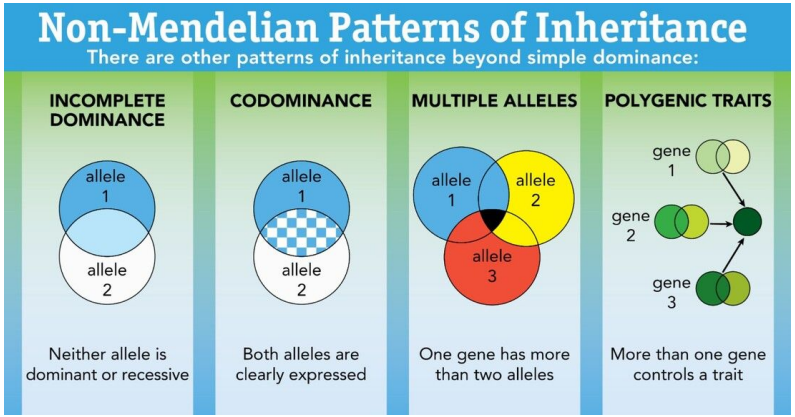

see Chapter 3 in Genetics from Genes to Genomes for more info

2. Determine the probability of an affected offspring for a given couple
   a. Part of the job of a genetic counselor

Dominant and recessive pedigrees

Dominant: Huntington disease

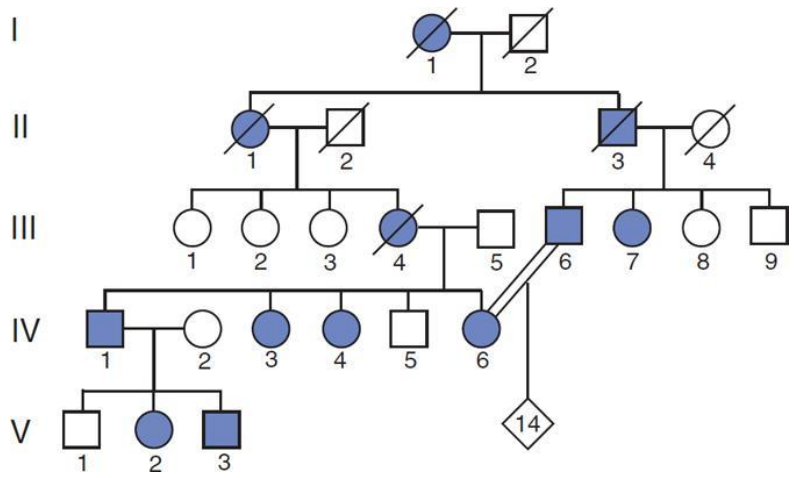

Recessive: Cystic fibrosis

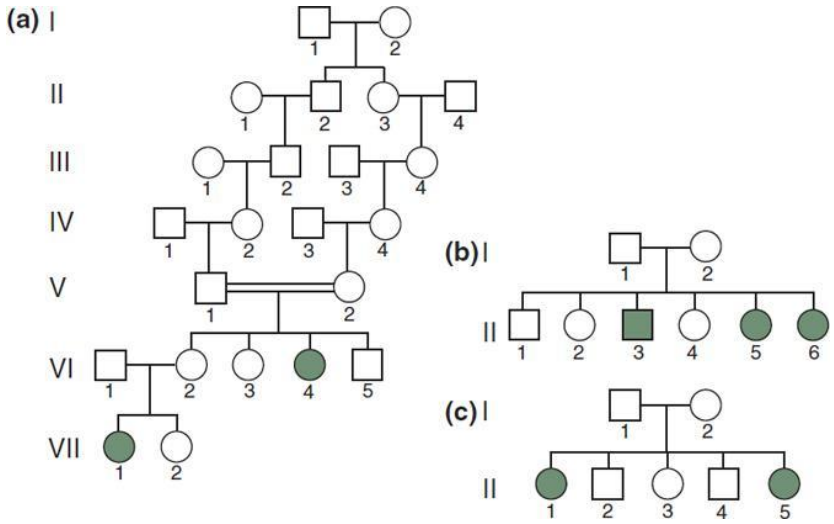

Notice the generation numbers and individuals' fill, shape and numbering.

How to recognize dominant and recessive traits in pedigrees?

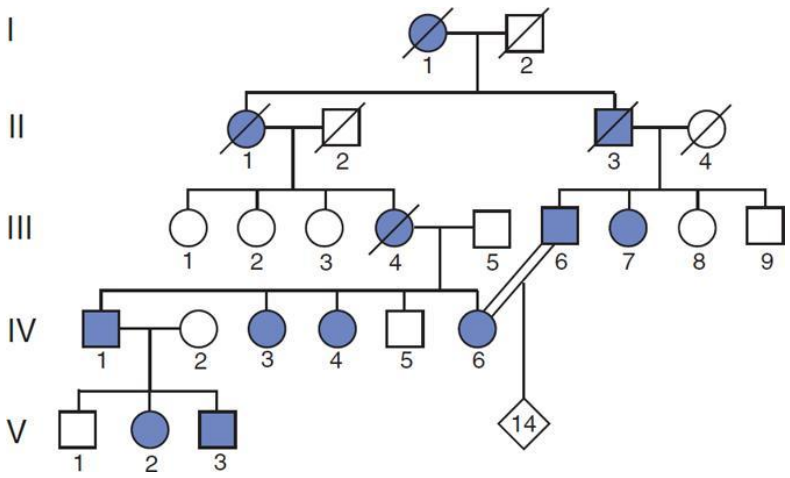

Dominant Traits

1. Affected children <u>always</u> have at least one affected parent
2. Dominant traits **show a vertical pattern of inheritance:** The trait shows up in every generation
   a. Unaffected children are possible, if both parents are heterozygotes

How to recognize dominant and recessive traits in pedigrees?

Recessive Traits

1. Affected individuals may be the children of two unaffected carriers
   a. esp. as a result of consanguineous matings.
   b. Carrier = individual who is heterozygous for a recessive (deleterious) trait

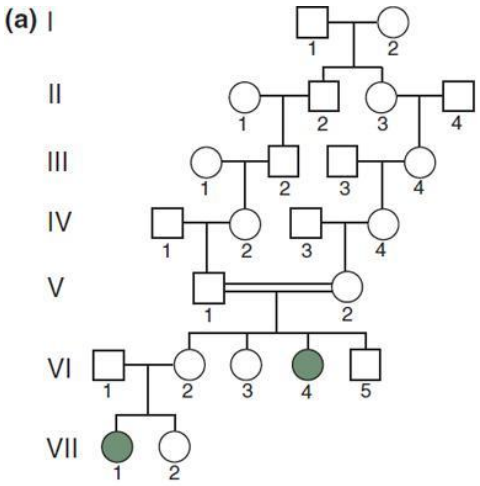

How to recognize dominant and recessive traits in pedigrees?

Recessive Traits

1. Affected individuals may be the children of two unaffected carriers
   a. esp. as a result of consanguineous matings.

2. <u>Rare</u> recessive traits often **show a horizontal pattern of inheritance:** The trait first appears among several members of one generation and is not seen in earlier generations.

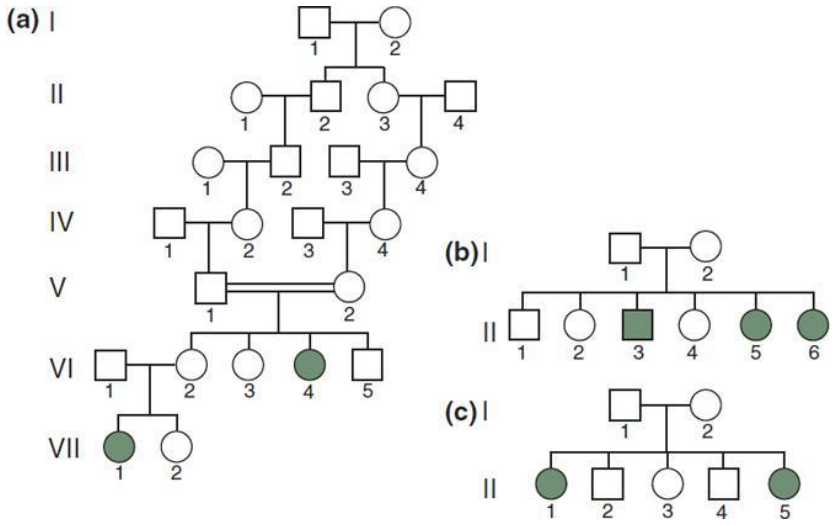

How to recognize dominant and recessive traits in pedigrees?

Recessive Traits

1. Affected individuals may be the children of two unaffected carriers
   a. esp. as a result of consanguineous matings.

2. <u>Rare</u> recessive traits often **show a horizontal pattern of inheritance:** The trait first appears among several members of one generation and is not seen in earlier generations.

3. <u>Common</u> recessive traits may show a vertical pattern of inheritance (because heterozygotes are common)

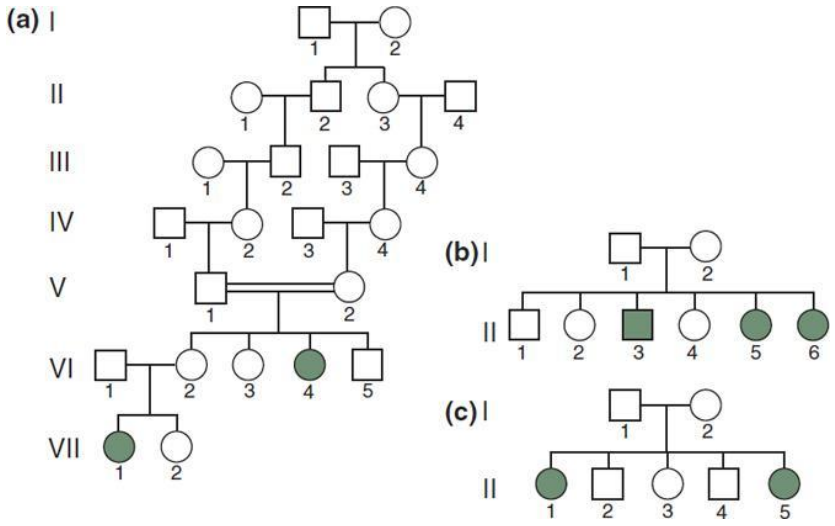

Is this a dominant or recessive trait?

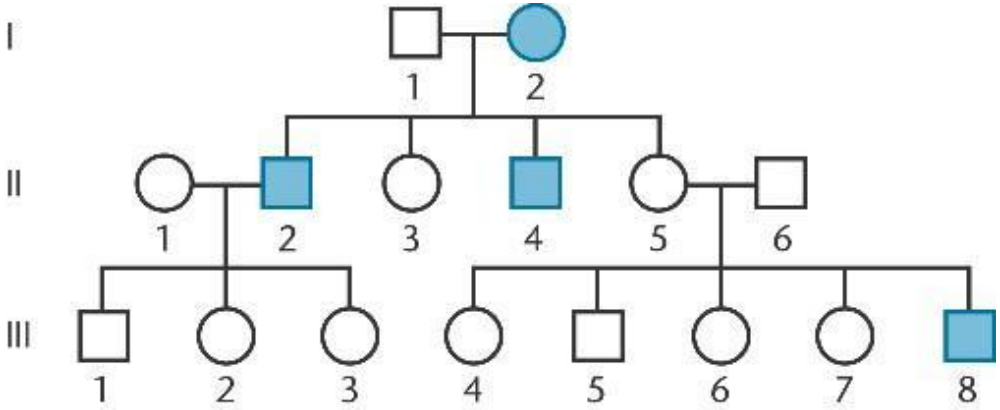

How to recognize dominant and recessive traits in pedigrees?

Dominant Traits

1. Affected children always have at least one affected parent

2. Dominant traits **show a vertical pattern of inheritance:** The trait shows up in every generation

3. Two affected parents can produce unaffected children, if both parents are heterozygotes

Recessive Traits

1. Affected individuals can be the children of two unaffected carriers, particularly as a result of consanguineous matings.

2. Rare recessive traits **show a horizontal pattern of inheritance:** The trait first appears among several members of one generation and is not seen in earlier generations.

3. Recessive traits may show a vertical pattern of inheritance if the trait is extremely common in the population

4. All the children of two affected parents should be affected.

Is this a dominant or recessive trait?

How to recognize dominant and recessive traits in pedigrees?

Dominant Traits

1. Affected children always have at least one affected parent
2. Dominant traits **show a vertical pattern of inheritance:** The trait shows up in every generation
3. Two affected parents can produce unaffected children, if both parents are heterozygotes

Recessive Traits

1. Affected individuals can be the children of two unaffected carriers, particularly as a result of consanguineous matings.
2. Rare recessive traits **show a horizontal pattern of inheritance:** The trait first appears among several members of one generation and is not seen in earlier generations.
3. Recessive traits may show a vertical pattern of inheritance if the trait is extremely common in the population
4. All the children of two affected parents should be affected.

vertical transmission of trait

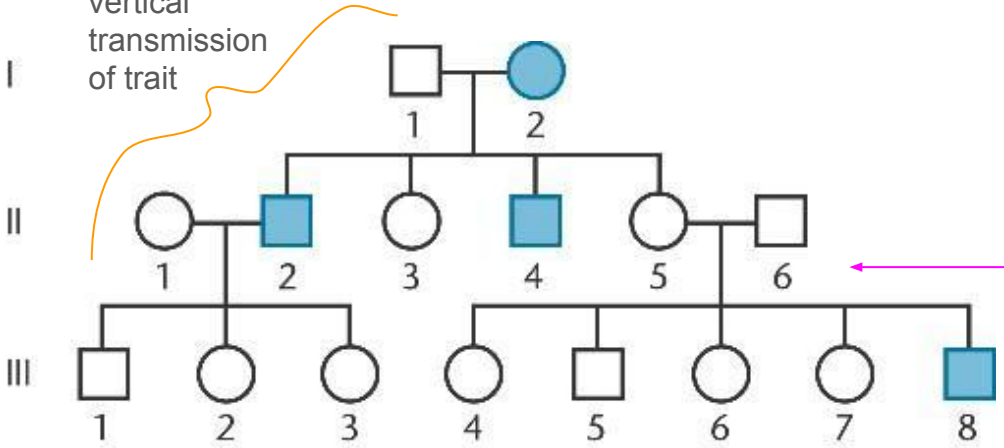

Parents of affected are not affected

Trait not inherited

Is this a dominant or <u>recessive</u> trait?

How to recognize dominant and recessive traits in pedigrees?

Dominant Traits

1. Affected children always have at least one affected parent
2. Dominant traits **show a vertical pattern of inheritance:** The trait shows up in every generation
3. Two affected parents can produce unaffected children, if both parents are heterozygotes

Recessive Traits

1. Affected individuals can be the children of two unaffected carriers, particularly as a result of consanguineous matings.
2. Rare recessive traits **show a horizontal pattern of inheritance:** The trait first appears among several members of one generation and is not seen in earlier generations.
3. Recessive traits may show a vertical pattern of inheritance if the trait is extremely common in the population
4. All the children of two affected parents should be affected.

vertical transmission of trait

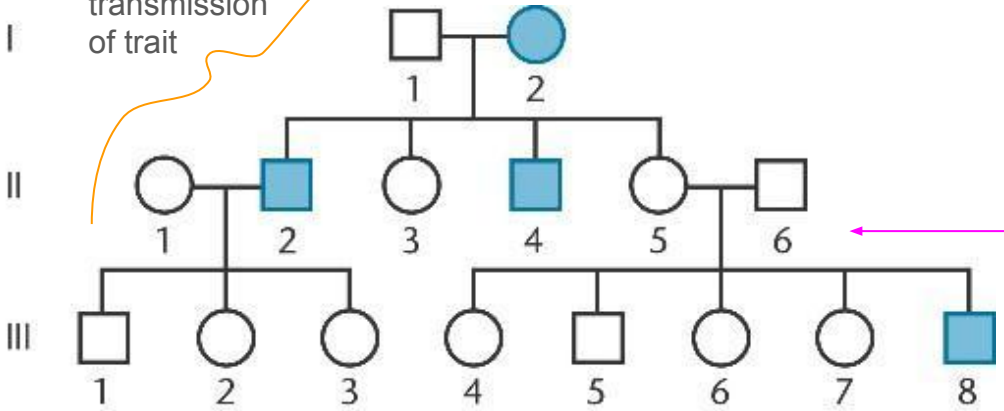

Parents of affected are not affected

Trait not inherited

Is there anything else interesting about the inheritance pattern?

I.e., How could males display affected traits at a higher rate than females?

Which chromosome might encode the causative allele?

Pedigrees considering sex chromosomes: X-linked traits

Autosome - chromosome that controls the inheritance of all an organism's characteristics except the sex-linked ones

Sex chromosomes
(humans; other species can be different):

Female
- two X chromosomes
(100% of gametes have an X)

Male
- one X chromosome (50% of gametes)
- one Y chromosome (50% of gametes)

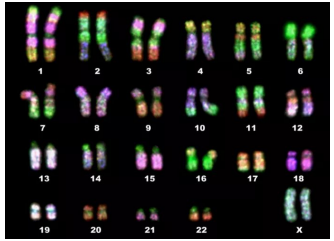

AUTOSOMAL DOMINANT

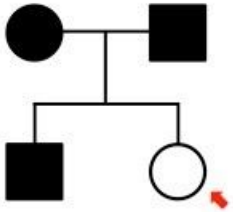

Cannot be recessive as two affected parents could **not** have an unaffected offspring

Parents MUST be heterozygous

AUTOSOMAL RECESSIVE

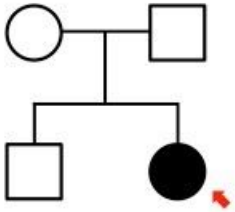

Cannot be dominant as two unaffected parents could **not** have an affected offspring

Parents MUST be heterozygous

X-LINKED DOMINANT

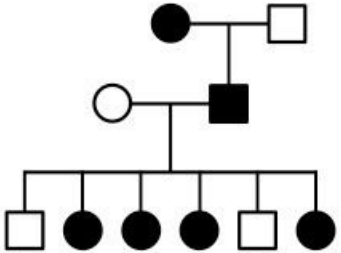

Sex linkage cannot be confirmed

100% incidence of affected daughters from an affected father *suggests* X-linked dominance

X-LINKED RECESSIVE

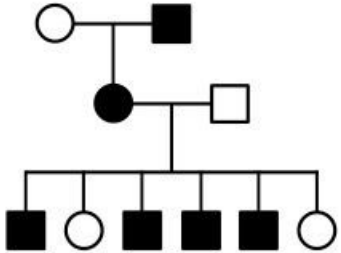

Sex linkage cannot be confirmed

100% incidence of affected sons from an affected mother *suggests* X-linked recessive

Example : X-linked dominant

Mother passes their X's to both sons and daughters

Fathers pass their X to daughters only

For sex-linked traits, remember that males are hemizygous (only one copy of the X; the Y doesn't have many genes)

X^D = dominant mutant allele

X^d = recessive normal allele

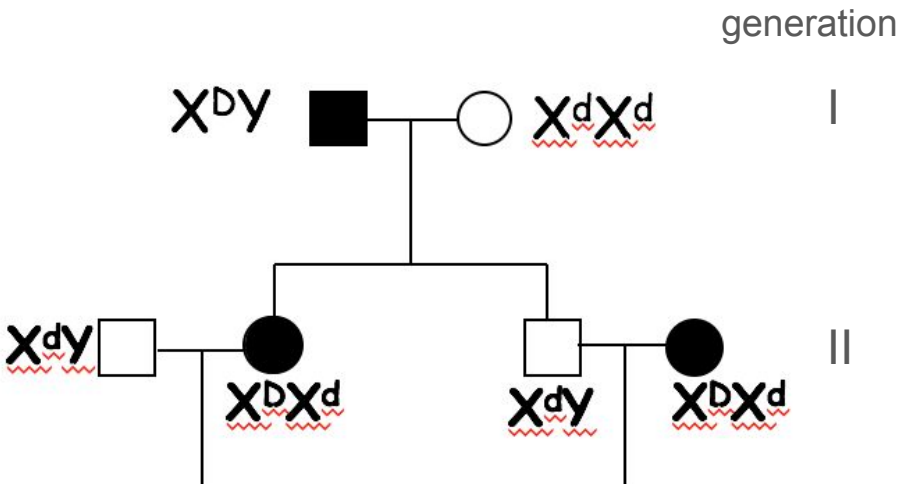

Are affected males possible in generation II?

- No - their Xs come from mom
- Only daughters can receive the dad's deleterious X allele

What are the possible generation III genotypes?

Example : X-linked dominant

Mother passes their X's to both sons and daughters

Fathers pass their X to daughters only

For sex-linked traits, remember that males are hemizygous (only one copy of the X; th Y doesn't have many genes)

X^D = dominant mutant allele

X^d = recessive normal allele

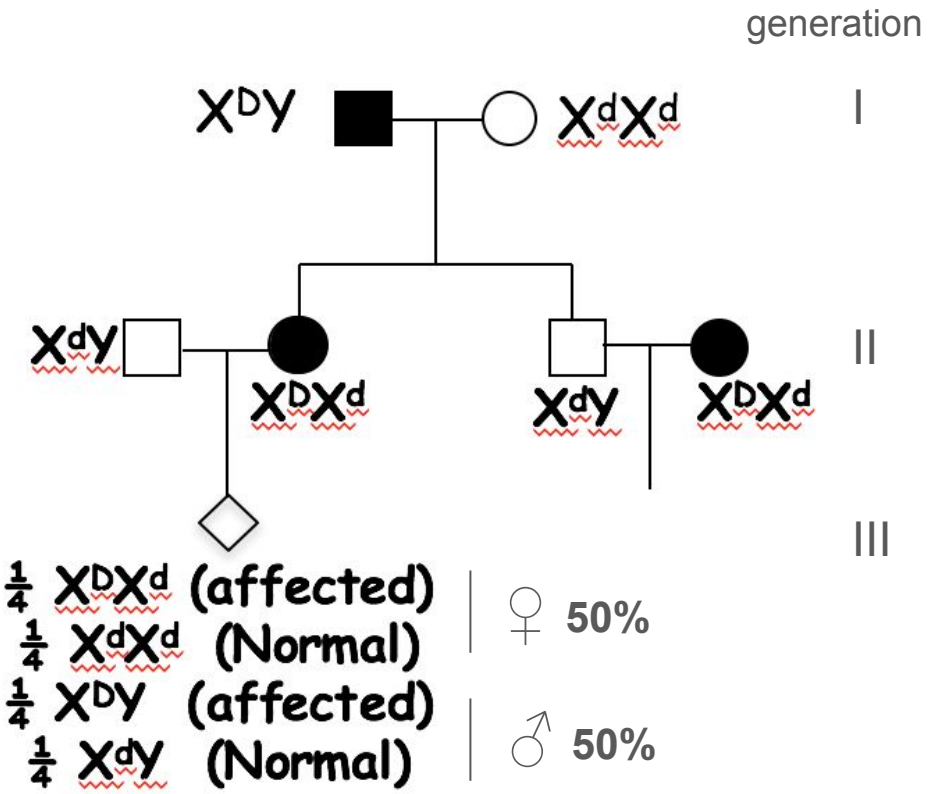

What are the possible generation III genotypes?

For Friday’s class:

1. Reading in Genetics: From Genes to Genomes
   a. Finish Chapter 2
   b. Start Chapter 4.6-4.7
2. Start working on Problem Set 2: Sum and product rules and introduction to pedigrees
3. Consider forming a study group

General Probability Rules

Rule 1: The probability of an impossible event is zero; the probability of a certain event is one. Therefore, for any event A, the range of possible probabilities is: $0 \leq P(A) \leq 1$

Rule 2: For S the sample space of all possibilities, P(S) = 1. That is the sum of all the probabilities for all possible events is equal to one. Recall the party affiliation above: if you have to belong to one of the three designated political parties, then the sum of P(R), P(D) and P(I) is equal to one.

Rule 3: For any event A, $P(A^c) = 1 - P(A)$. It follows then that $P(A) = 1 - P(A^c)$

Rule 4 (Addition Rule): This is the probability that **either one or both** events occur

a. If two events, say A and B, are **mutually exclusive** - that is A and B have no outcomes in common - then P(A or B) = P(A) + P(B)

b. If two events are NOT mutually exclusive, then P(A or B) = P(A) + P(B) - P(A and B)

Rule 5 (Multiplication Rule): This is the probability that **both** events occur

a. P(A and B) = P(A) • P(B|A) or P(B)*P(A|B) Note: this straight line symbol, |, does not mean divide! This symbols means "conditional" or "given". For instance P(A|B) means the probability that event A occurs *given* event B has occurred.

b. If A and B are independent - neither event influences or affects the probability that the other event occurs - then P(A and B) = P(A)*P(B). This particular rule extends to more than two independent events. For example, P(A and B and C) = P(A)*P(B)*P(C)

Rule 6 (Conditional Probability): $P(A|B) = \frac{P(A \text{ and } B)}{P(B)}$ or $P(B|A) = \frac{P(A \text{ and } B)}{P(A)}$