BME 105: Genetics in the Genomics Era

Lecture 3: Determining the probability of an affected offspring

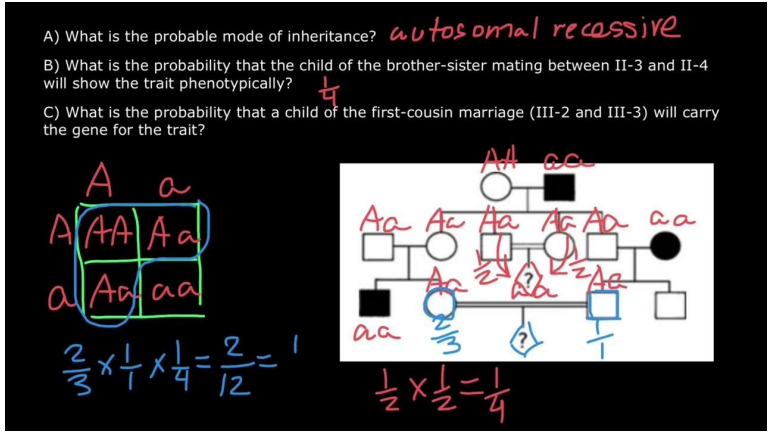

Instructor: Dr. Shelbi Russell,
Assistant Professor

Course website on canvas.ucsc.edu

Some slides modified from Angela Brooks

Lecture 3 Learning Objectives

- Understand conditional probability as it applies to pedigree analysis: if you can rule out a genotype, then you calculate the probability of a trait over the reduced denominator.
- Be able to read a pedigree to infer the location of the allele on an autosome or sex chromosome
- Become fluent in pedigree analysis - practice, practice, practice!
- Understand how mitochondrial inheritance is different from nuclear chromosomal inheritance.
    - Be able to answer: Why is mitochondrial trait inheritance not Mendelian?

Mendelian Laws and Probability Recap:

Mendel's law of independent segregation through gamete inheritance

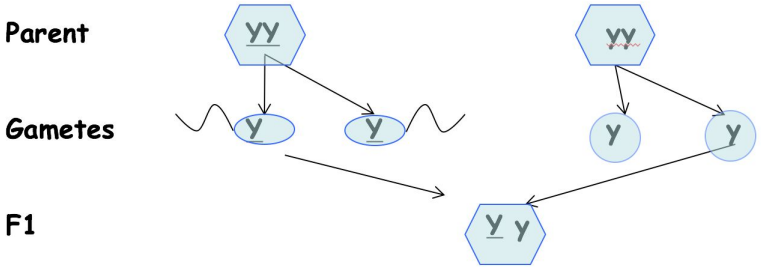

P(gamete in individual)=½

P(gamete in pool)=¼

Mendelian Laws and Probability Recap:

Mendel's law of independent segregation through gamete inheritance

These laws allow us to calculate the probability of offspring inheriting alleles

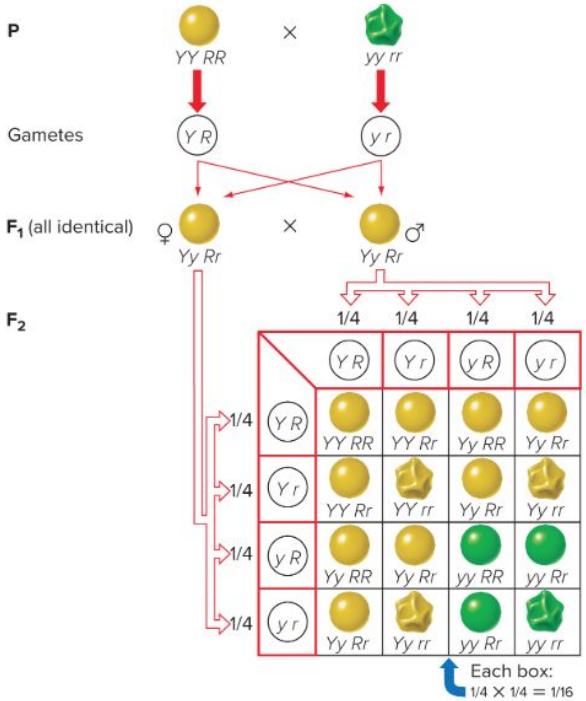

P(gamete in individual)=½

P(gamete in pool)=¼

Mendelian Laws and Probability Recap:

Mendel's law of independent segregation through gamete inheritance

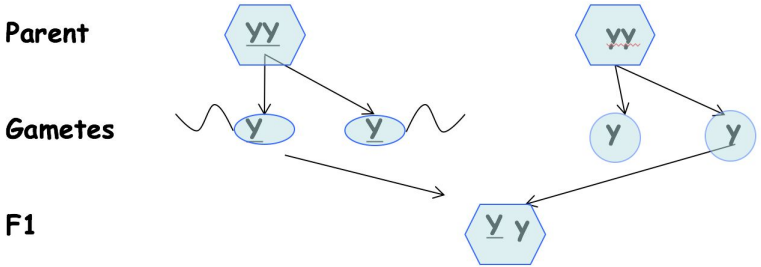

P(gamete in individual)=½

P(gamete in pool)=¼

Probability Rules

Product rule

P(A **and** B) = P(A) * P(B) if A and B are **independent**

Sum rule

P(A **or** B) = P(A) **+** P(B) if A and B are **mutually exclusive** (cannot both occur)

Mendelian Laws and Probability Recap:

Mendel's law of independent segregation through gamete inheritance

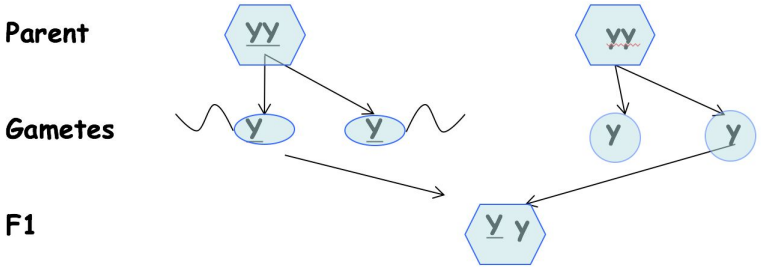

P(gamete in individual)=½

P(gamete in pool)=¼

E.g., 6-sided dice rolling

P(roll a 5) = 1/6

P(roll a 5 or 6) = ⅙ + ⅙=⅓

P(roll 3-fives) = ⅙ * ⅙ * ⅙ = $(⅙)^3$ = 1/216

Probability Rules

Product rule

P(A **and** B) = P(A) * P(B) if A and B are **independent**

Sum rule

P(A **or** B) = P(A) **+** P(B) if A and B are **mutually exclusive**

In this autosomal recessive disease, what is the probability that each child in the third generation is affected?

I

II

III

P(rr) = ?

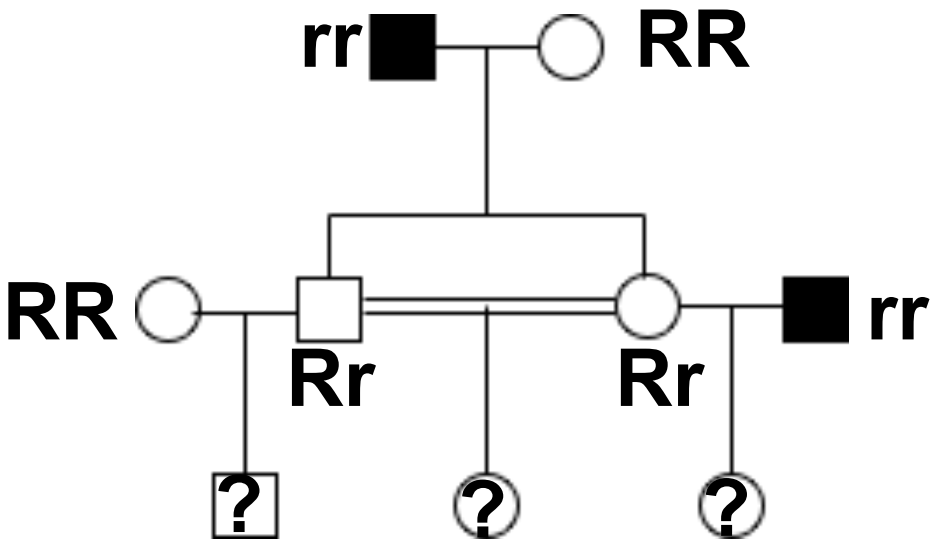

In this autosomal recessive disease, what is the probability that each child in the third generation is affected?

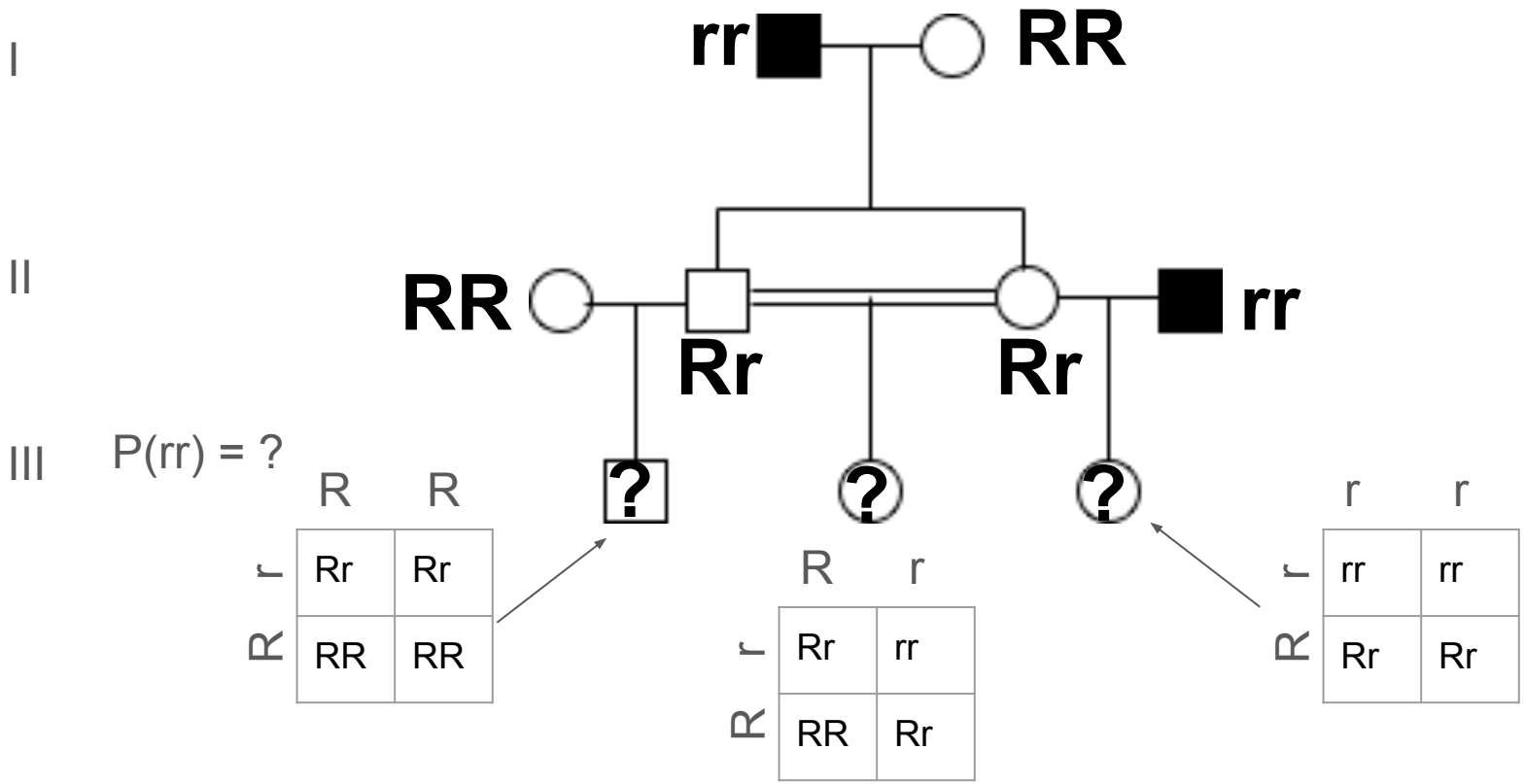

In this autosomal recessive disease, what is the probability that each child in the third generation is affected?

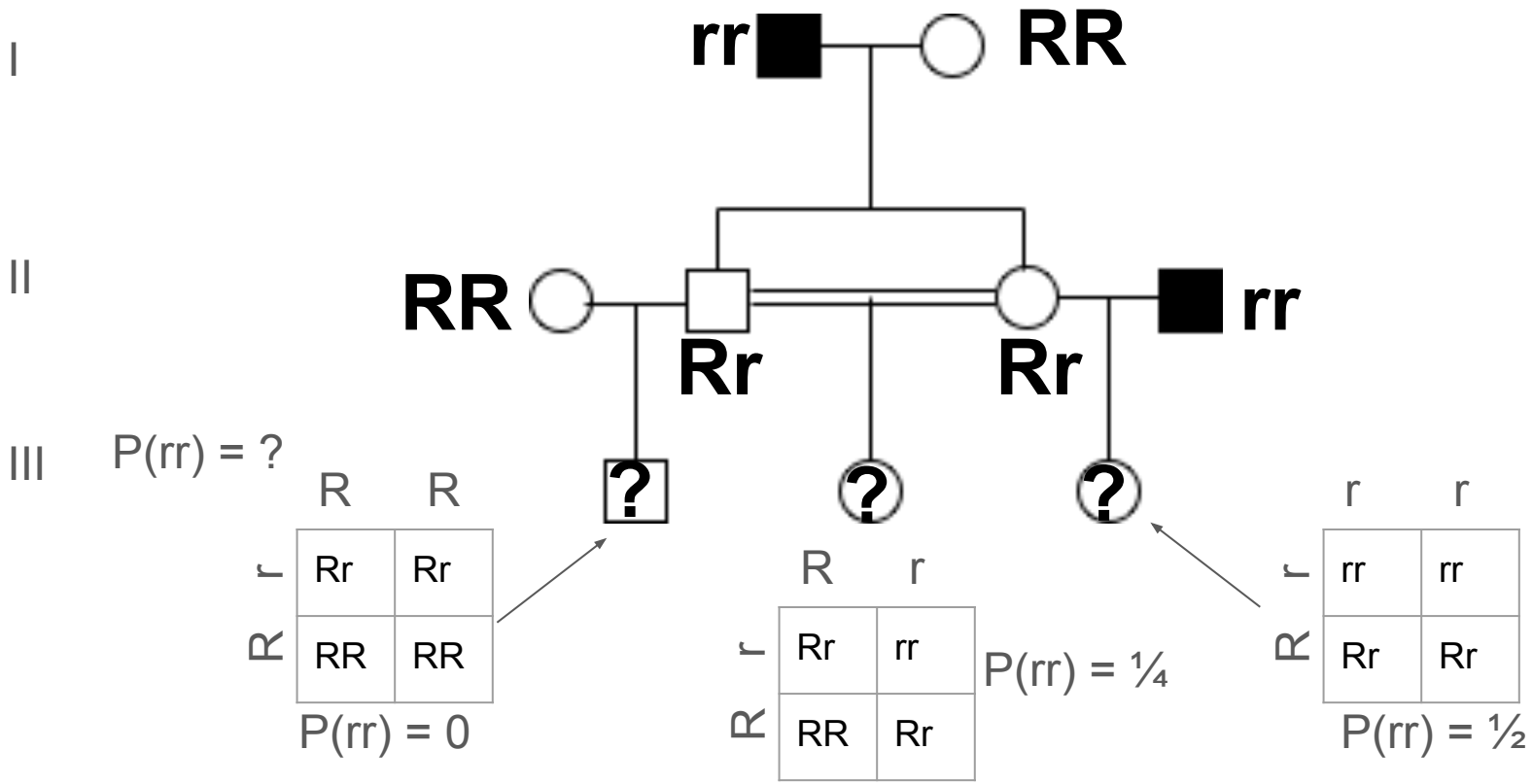

Calculating conditional probabilities from pedigrees

Product rule:

P(A **and** B) = P(A) * P(B) if A and B are independent

Sum rule:

P(A **or** B) = P(A) + P(B) if A and B are mutually exclusive

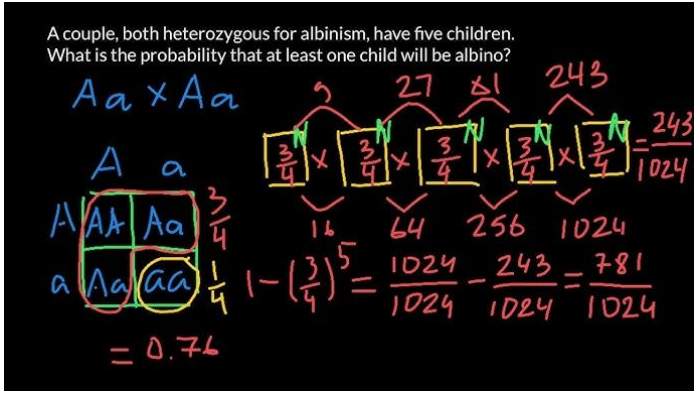

Calculating conditional probabilities from pedigrees

Product rule:

P(A **and** B) = P(A) * P(B) if A and B are independent

Sum rule:

P(A **or** B) = P(A) + P(B) if A and B are mutually exclusive

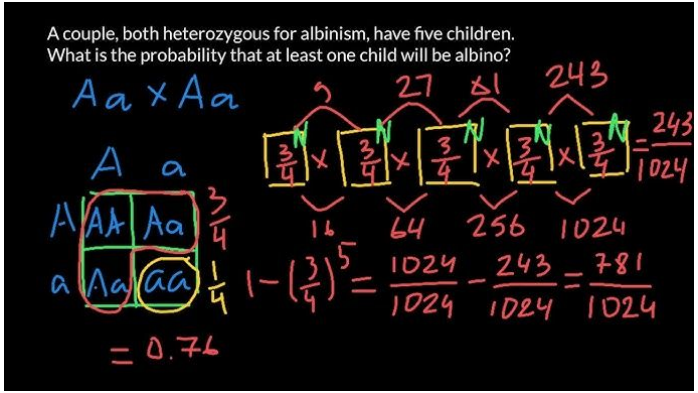

Now we will introduce **conditional probability,** allowing us to compute P(A) or P(B) <u>when A and B are not independent.</u>

P(A given B has occurred) = P(A and B | B) = P (A and B) * P(B)

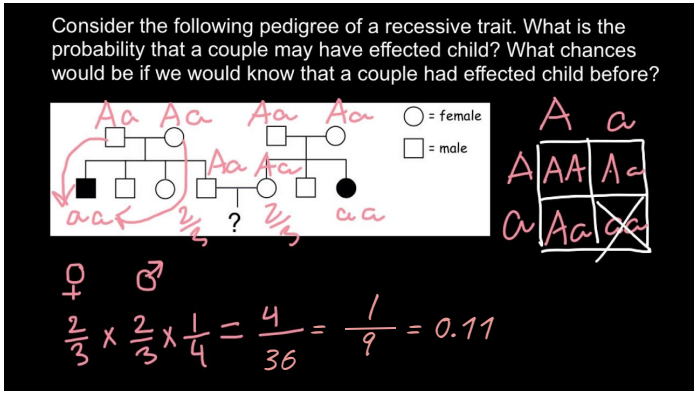

What if A and B are independent?
Then it looks just like the product rule.

In this pedigree, what is the probability that each child in the third generation is affected?

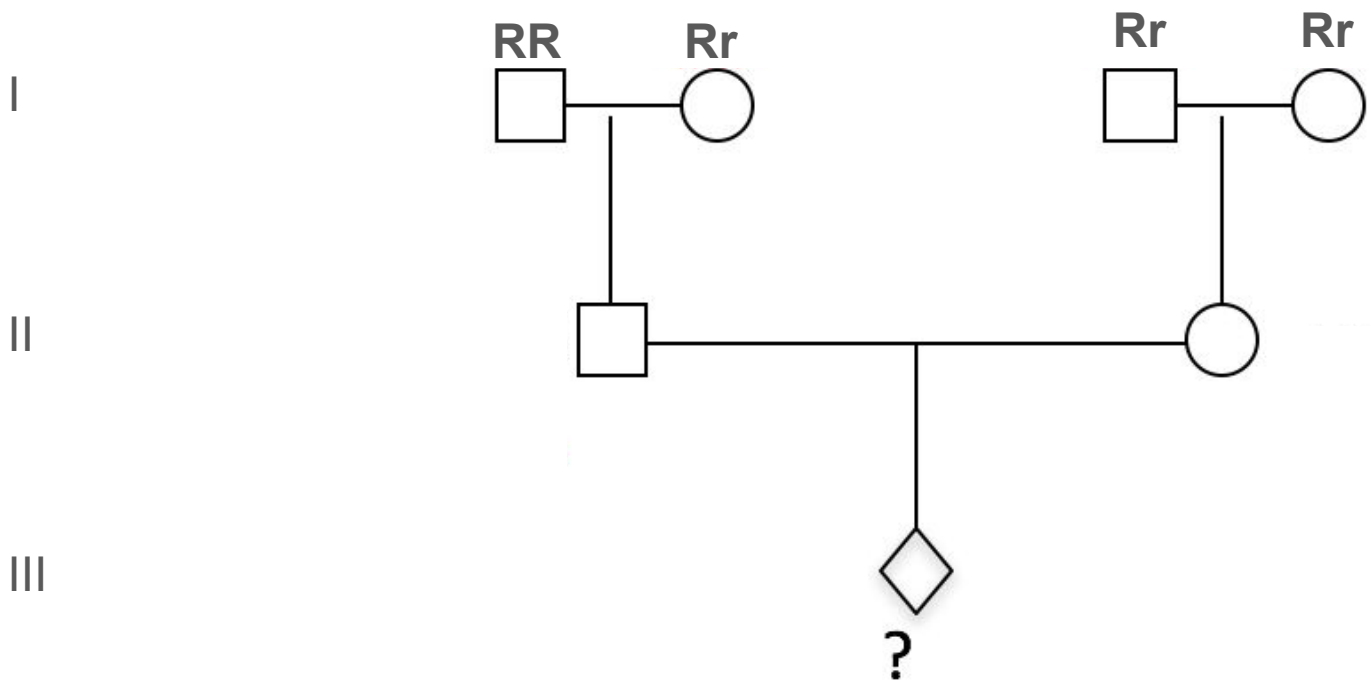

To consider:

1. Is this an autosomal dominant or recessive disease?
2. Are any of the sampled individuals affected?
3. How would generation III individuals acquire the trait?

In this pedigree, what is the probability that each child in the third generation is affected?

I

II P(Rr) = ?

III P(rr) = ?

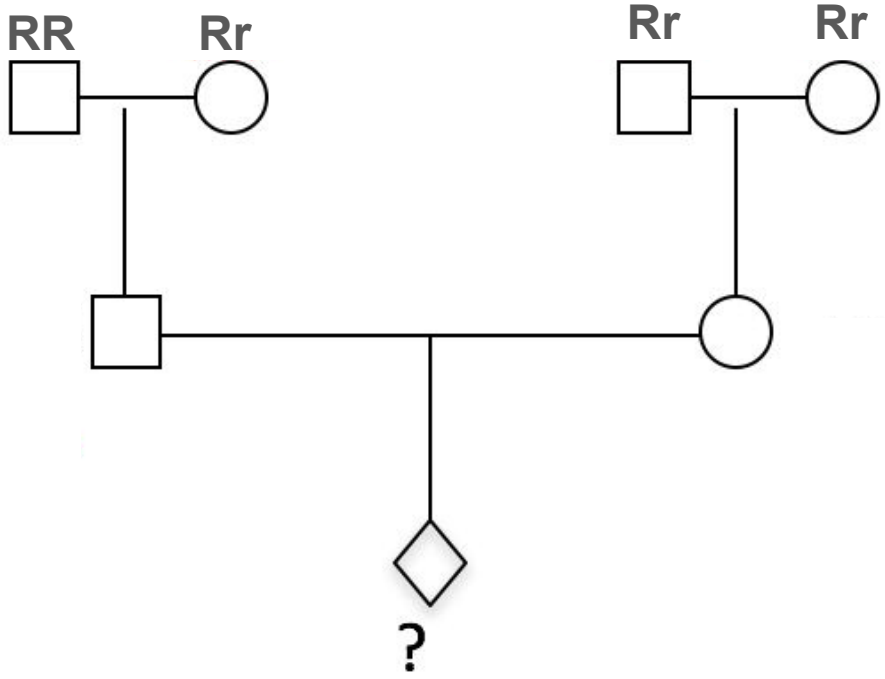

To consider:

1. Is this an autosomal dominant or recessive disease?
   ⇒ recessive
2. Are any of the sampled individuals affected?
   ⇒ no (b/c recessive)
3. How would generation III individuals acquire the trait?
   ⇒ parents are both carriers

In this pedigree, what is the probability that each child in the third generation is affected?

I

II

III

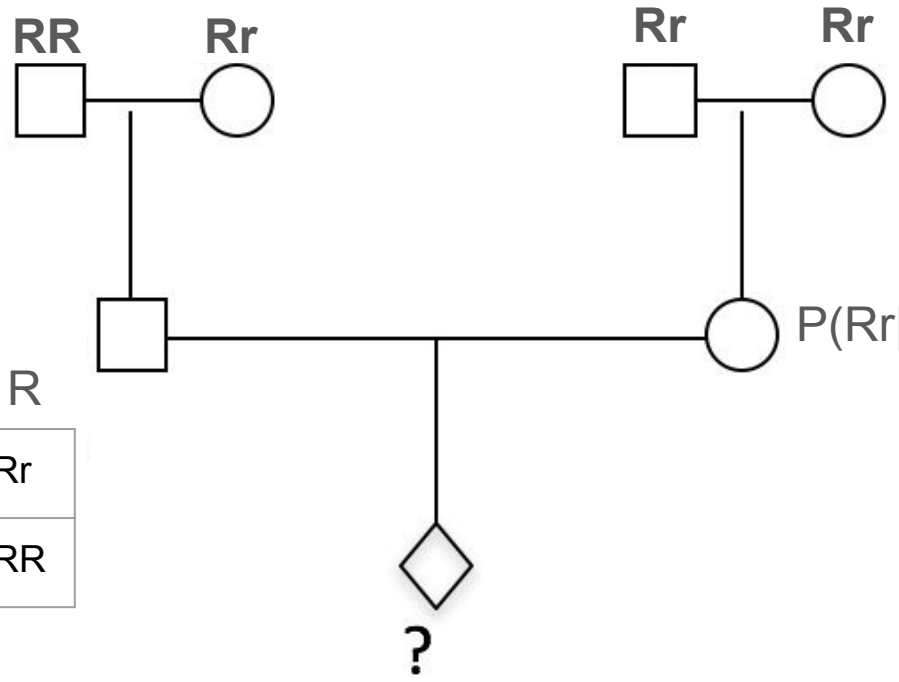

P(Rr) = 1/2

	R	R
r	Rr	Rr
R	RR	RR

P(Rr|not rr) = 2/3

	R	r
r	Rr	~~rr~~
R	RR	Rr

(Probability is calculated out of the possible gametes - we know that rr is impossible)

In this pedigree, what is the probability that each child in the third generation is affected?

I

II P(Rr) = 1/2

III P(rr) = ?

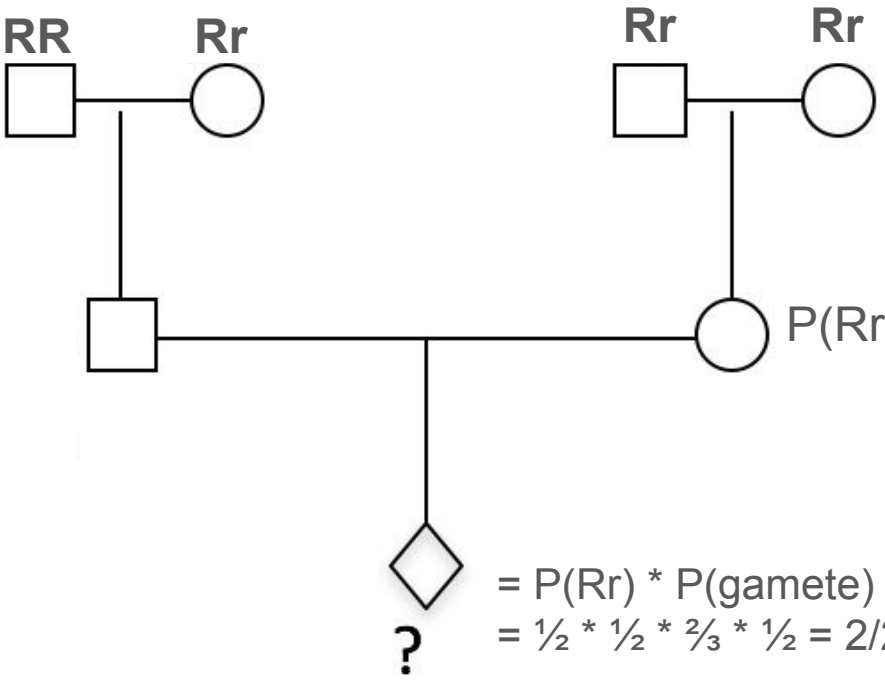

P(Rr|not rr) = 2/3

= P(Rr) * P(gamete) * P(Rr|not rr) *P(gamete)
= ½ * ½ * ⅔ * ½ = 2/24 = 1/12

In-class problem:

A young couple went to see a genetic counselor because each had a sibling with cystic fibrosis. Cystic fibrosis is a recessive disease, and neither member of the couple nor any of their four parents is affected. For the normal allele, use “+” and for the recessive allele use “CF”.

a. Draw the pedigree. Indicate genotypes, if known.

b. What are the chances that their child will have cystic fibrosis?

*This is a question from Midterm 1, Spring 2019

In-class problem:

A young couple went to see a genetic counselor because each had a sibling with cystic fibrosis. Cystic fibrosis is a recessive disease, and neither member of the couple nor any of their four parents is affected. For the normal allele, use “+” and for the recessive allele use “CF”.

a. Draw the pedigree. Indicate genotypes, if known.

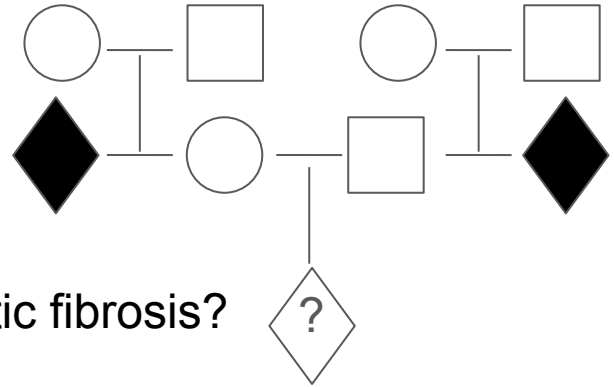

b. What are the chances that their child will have cystic fibrosis?

*This is a question from Midterm 1, Spring 2019

In-class problem:

A young couple went to see a genetic counselor because each had a sibling with cystic fibrosis. Cystic fibrosis is a recessive disease, and neither member of the couple nor any of their four parents is affected. For the normal allele, use “+” and for the recessive allele use “CF”.

a. Draw the pedigree. Indicate genotypes, if known.

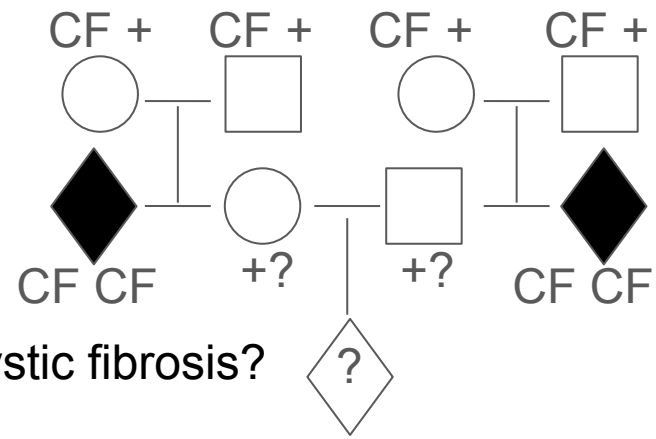

b. What are the chances that their child will have cystic fibrosis?

*This is a question from Midterm 1, Spring 2019

In-class problem:

A young couple went to see a genetic counselor because each had a sibling with cystic fibrosis. Cystic fibrosis is a recessive disease, and neither member of the couple nor any of their four parents is affected. For the normal allele, use “+” and for the recessive allele use “CF”.

a. Draw the pedigree. Indicate genotypes, if known.

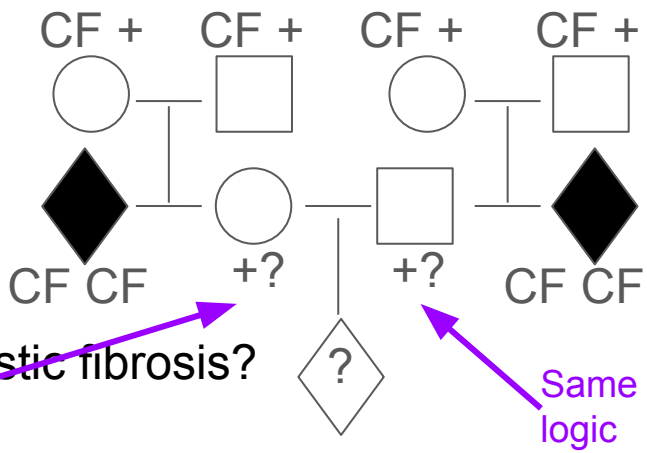

b. What are the chances that their child will have cystic fibrosis?

Not CF/CF
Only +/+ and CF/+ genotypes are possible:
⅔ of the options are CF/+ (+/+,CF/+,+/CF)

*This is a question from Midterm 1, Spring 2019

In-class problem:

A young couple went to see a genetic counselor because each had a sibling with cystic fibrosis. Cystic fibrosis is a recessive disease, and neither member of the couple nor any of their four parents is affected. For the normal allele, use “+” and for the recessive allele use “CF”.

a. Draw the pedigree. Indicate genotypes, if known.

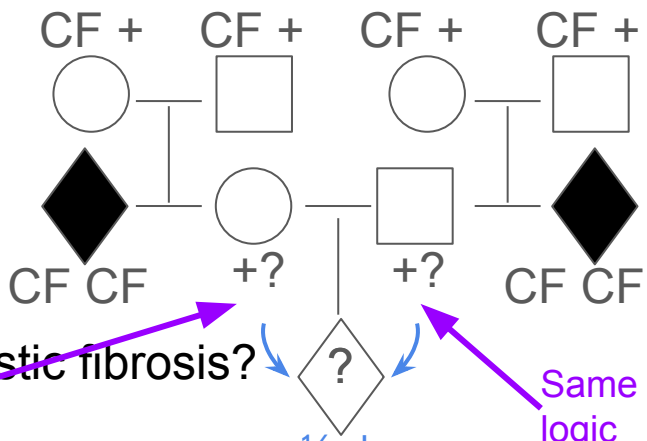

b. What are the chances that their child will have cystic fibrosis?

Not CF/CF
Only +/+ and CF/+ genotypes are possible:
⅔ of the options are CF/+ (+/+,CF/+,+/CF)

½ chance CF is transmitted

Same logic

*This is a question from Midterm 1, Spring 2019

P(III-1 CF/CF) = ⅔ * ½ * ⅔ * ½ = 4/36 = 1/9

Autosomal vs non-autosomal inheritance

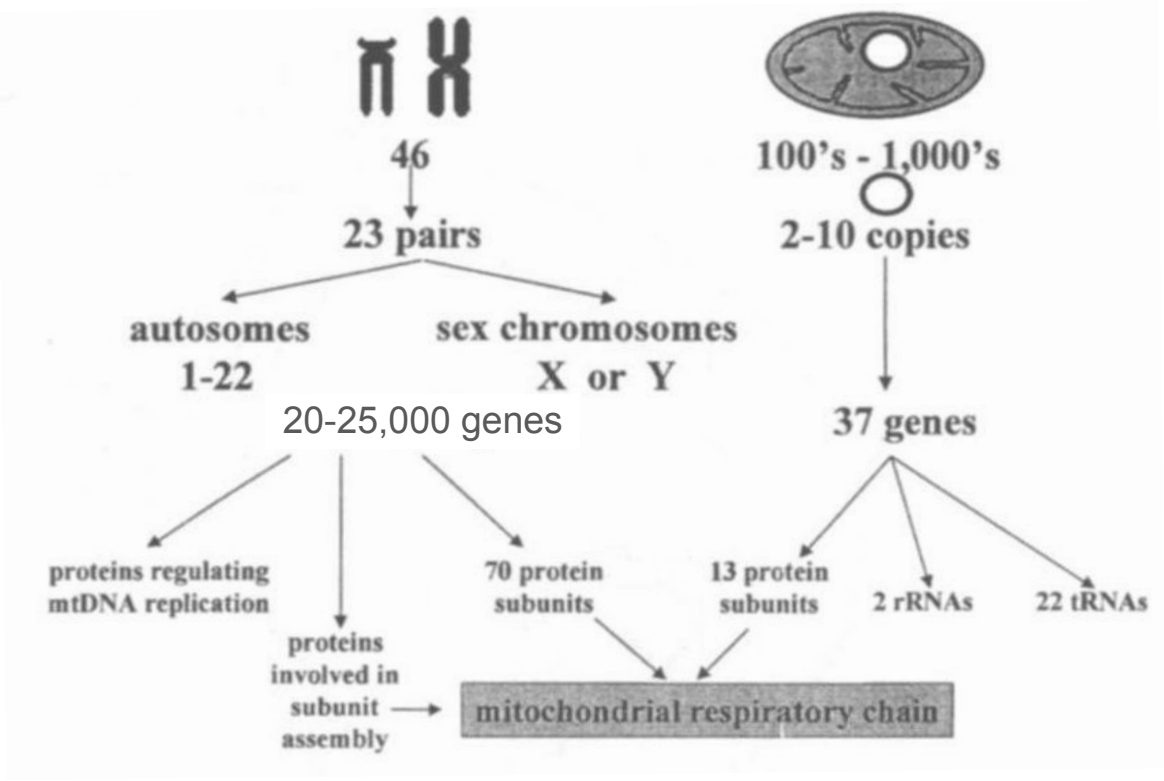

Christodoulou 2000 Human Reproduction

Autosomal vs sex chromosome traits

- Human females have two copies of the X
- Human males are <u>hemizygous</u> for the X chromosome
  - X and Y have homologous pseudoautosomal regions that allow them to pair during meiosis
- The absence of a homolog makes recessive X alleles dominant in males
  - Recessive deleterious X alleles are masked by the functional copy in heterozygous females

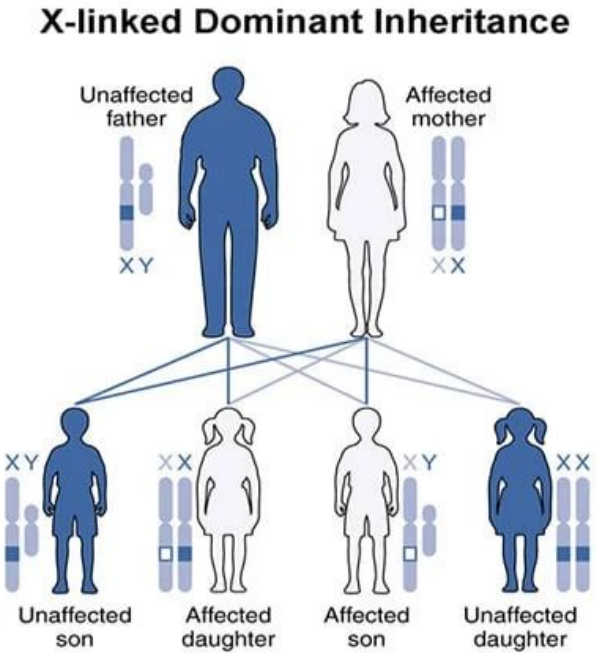

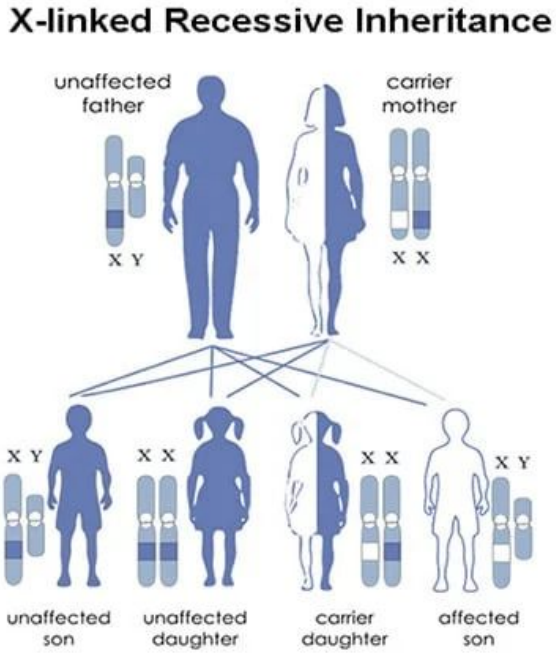

**note the reversed color designation for affected/unaffected in this figure*

X-linked <u>dominant</u> inheritance patterns

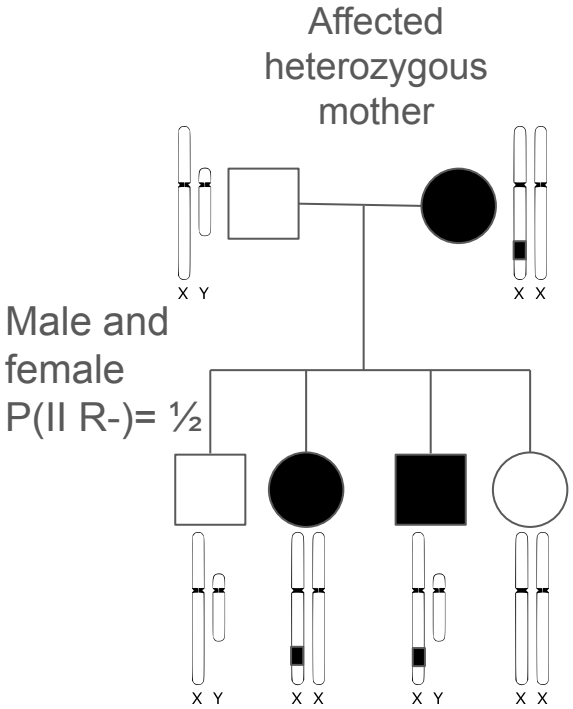

X-linked <u>dominant</u> inheritance patterns

Affected heterozygous mother

Affected hemizygous father

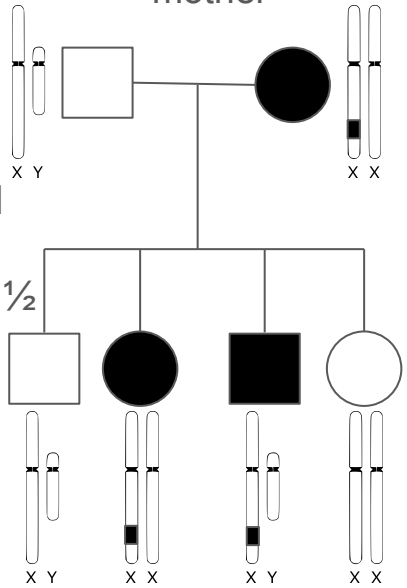

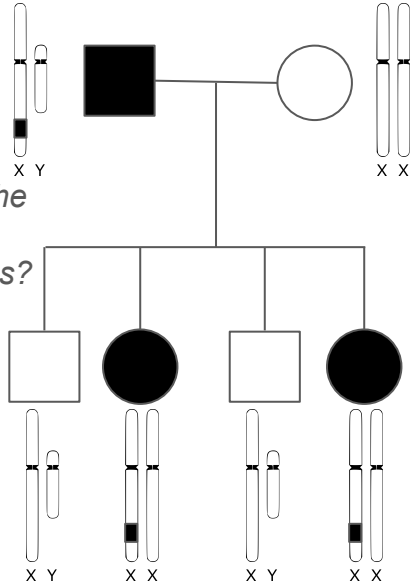

Male and female
P(II R-)= ½

What are the offspring probabilities?

X-linked <u>dominant</u> inheritance patterns

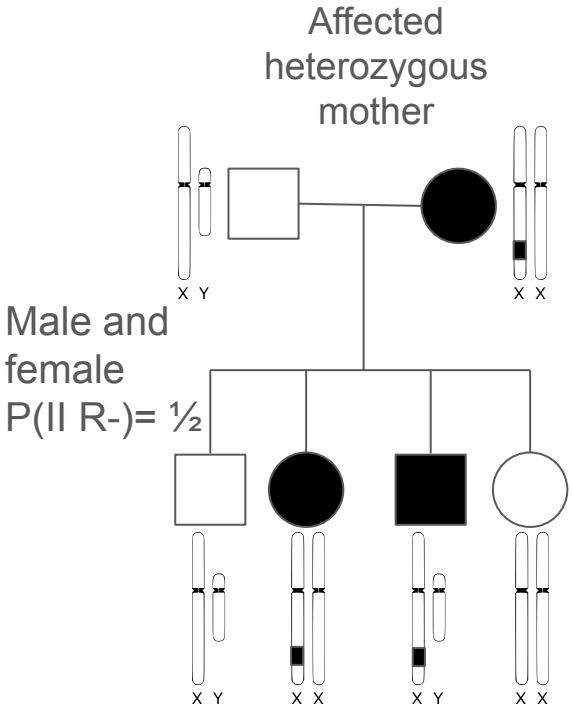

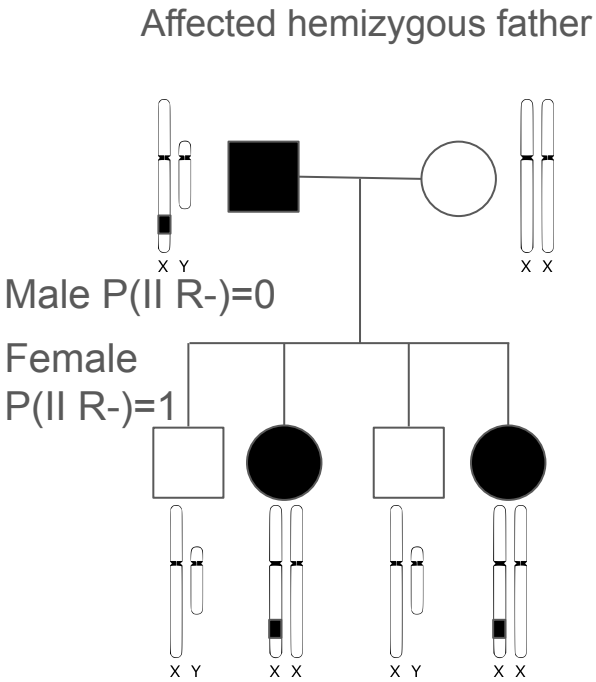

X-linked <u>dominant</u> inheritance patterns

Affected heterozygous mother

Male and female P(II R-)= ½

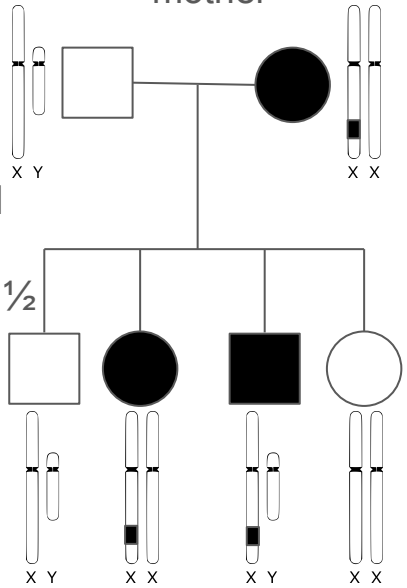

Affected hemizygous father

Male P(II R-)=0

Female P(II R-)=1

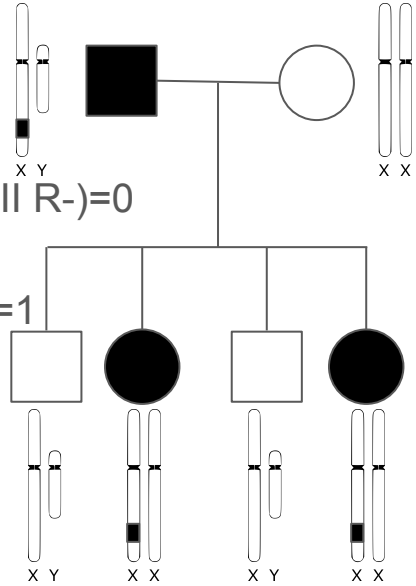

Affected homozygous mother

What are the offspring probabilities?

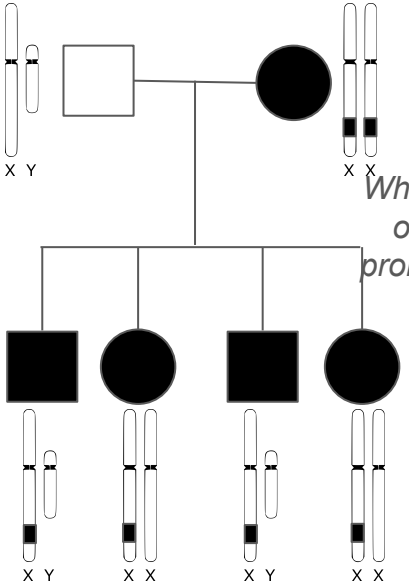

X-linked dominant inheritance patterns

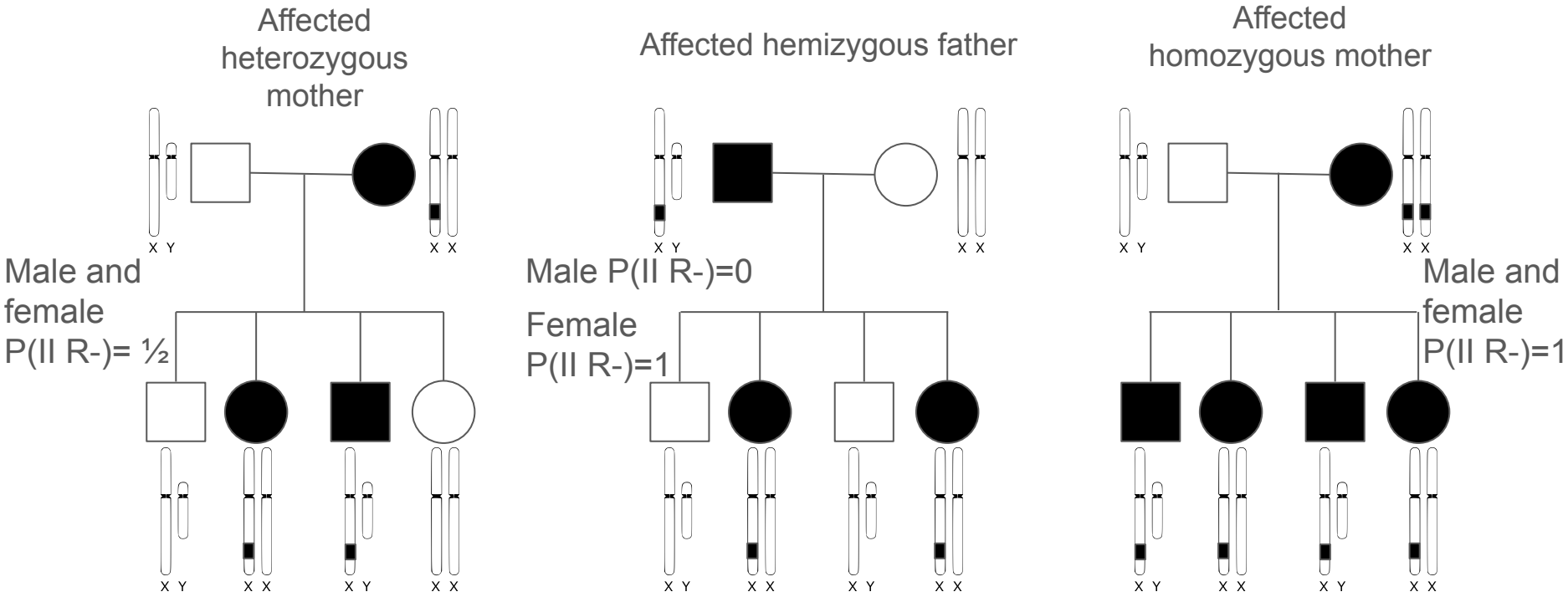

X-linked <u>dominant</u> inheritance patterns: <u>maternal</u> transmission probabilities same as autosomes

Affected heterozygous mother

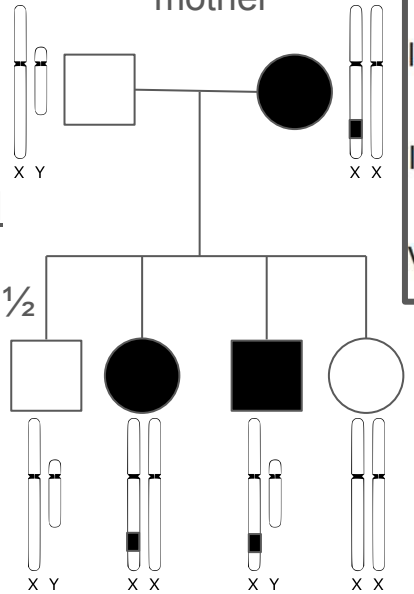

Male <u>and</u> female
P(II R-)= ½

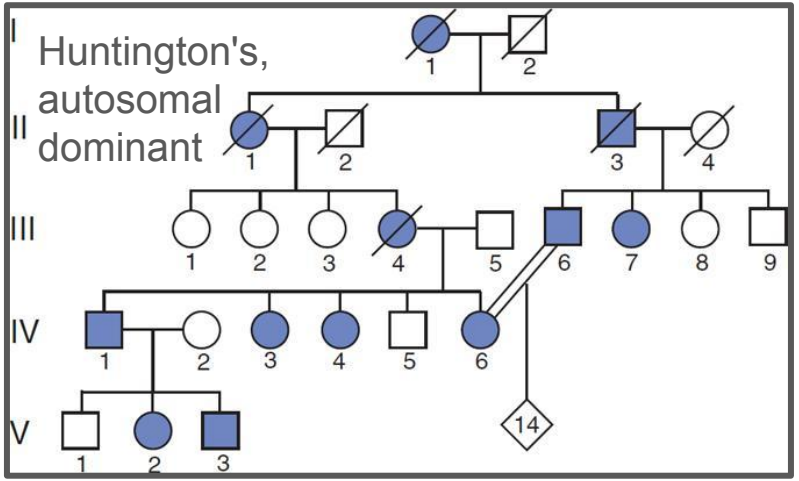

Affected homozygous mother

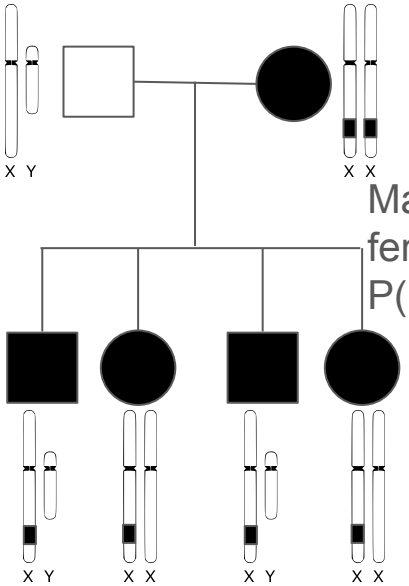

Male <u>and</u> female
P(II R-)=1

Autosomal dominant (male <u>and</u> female):

P(R-) from one heterozygous parent = ½

P(R-) from one homozygous parent = 1

X-linked <u>dominant</u> inheritance patterns: <u>paternal</u> transmission probabilities are distinct

Males only have one X to transmit

If an offspring receives a paternal X, then they are female

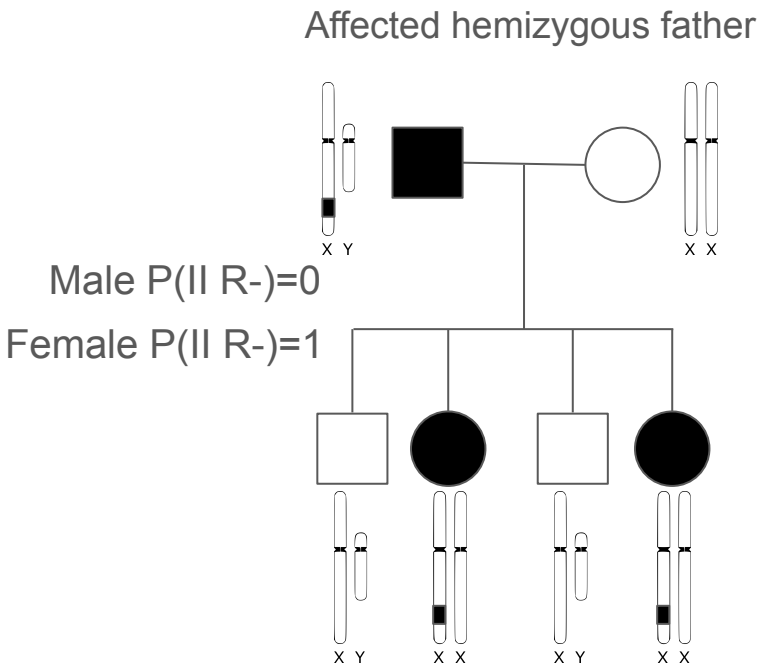

X-linked recessive inheritance patterns

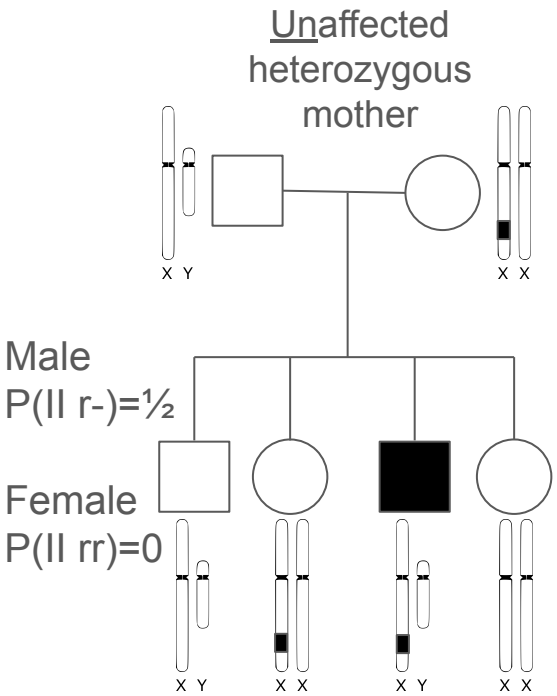

Recessive traits encoded on the X chromosome are “unmasked” in males

→ the trait appears dominant in males

Females can be carriers, males cannot

X-linked recessive inheritance patterns

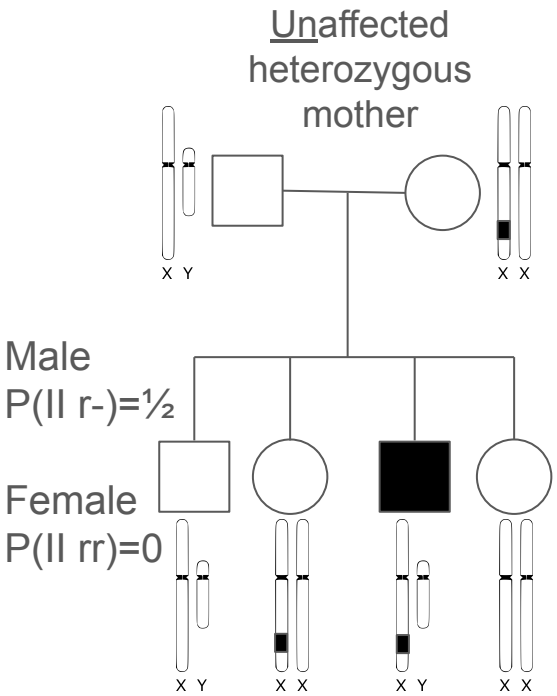

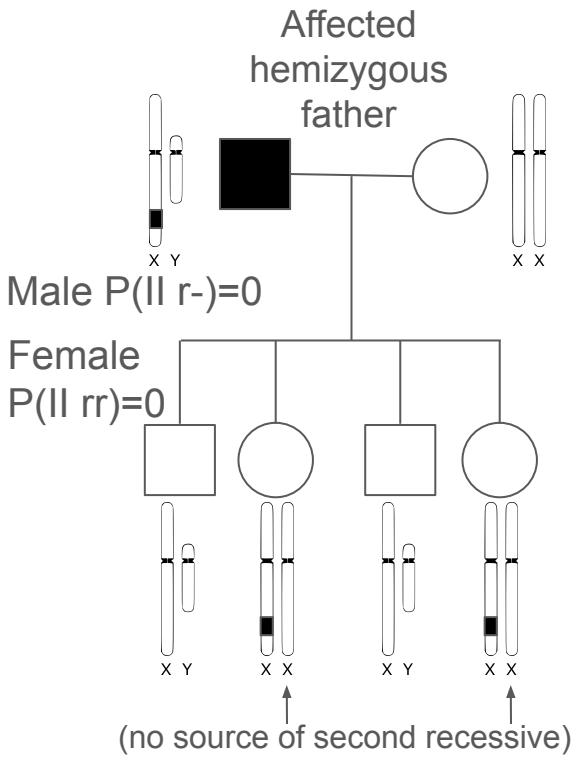

Recessive traits encoded on the X chromosome are "unmasked" in males

→ the trait appears dominant in males

Females can be carriers, males cannot

X-linked recessive inheritance patterns

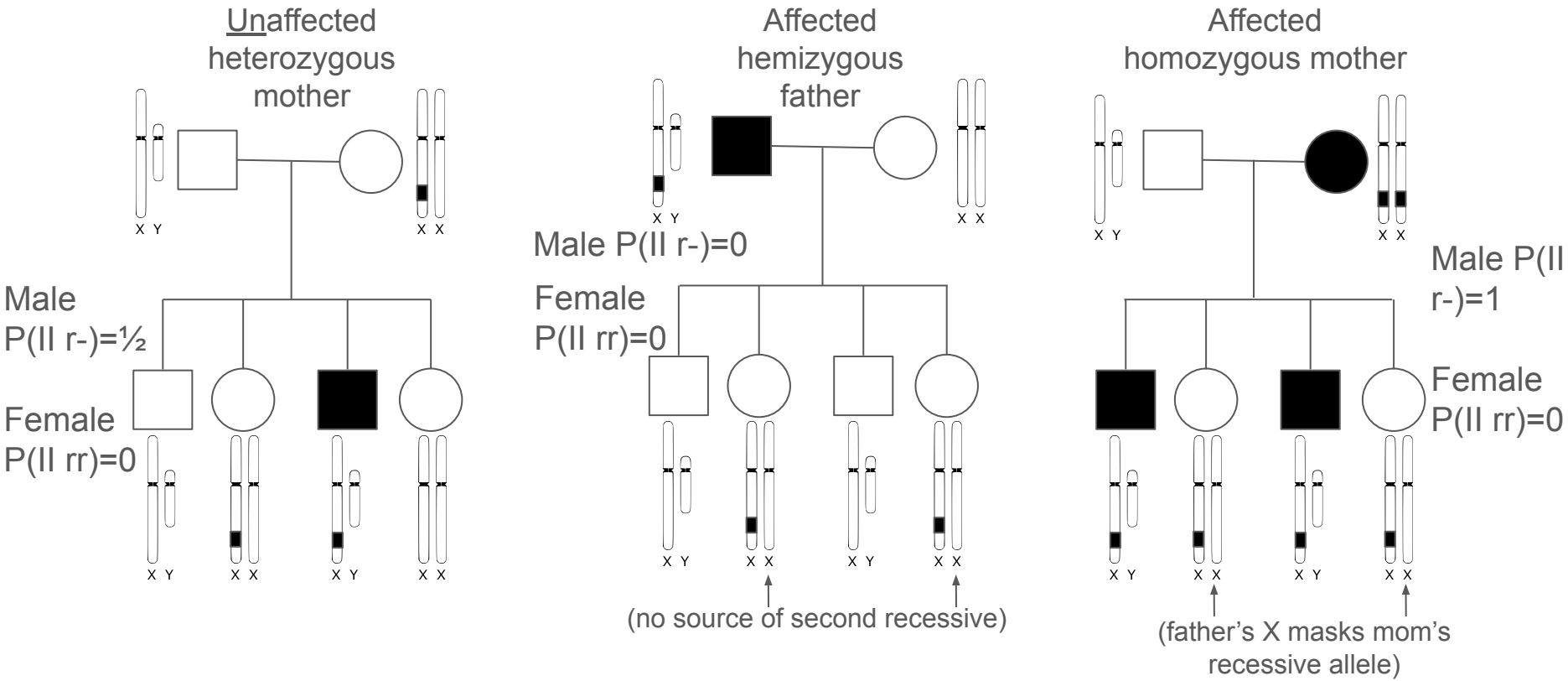

One example problem on (nuclear) inheritance

Match the pedigrees with the inheritance mode:
(assume all four traits are rare and completely penetrant)

- autosomal dominant
- autosomal recessive
- X-linked dominant
- X-linked recessive

pedigree 2

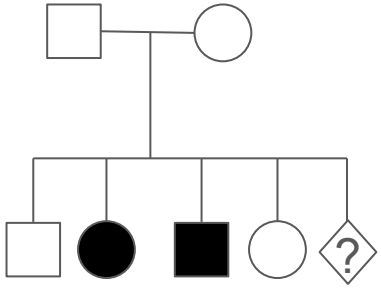

pedigree 4

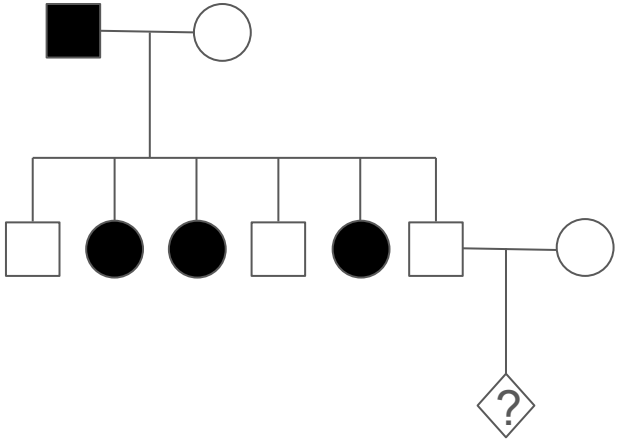

pedigree 1

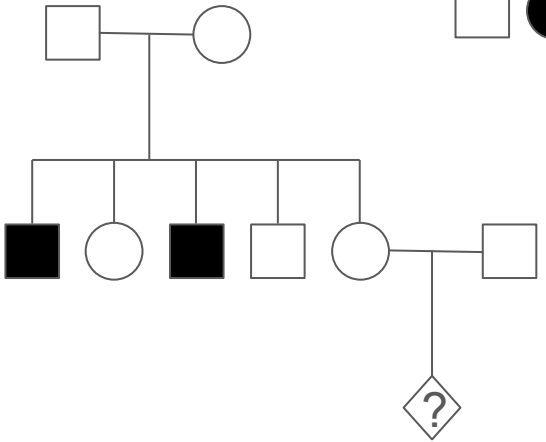

pedigree 3

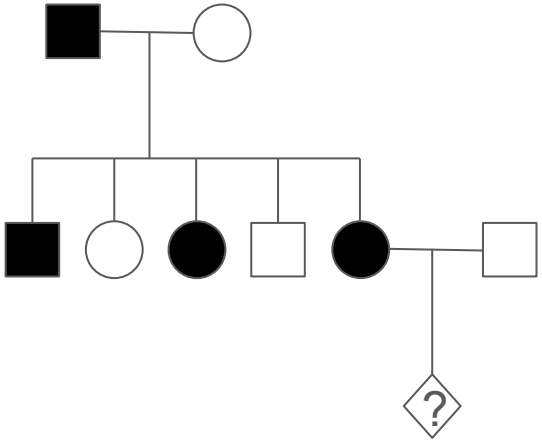

One example problem on (nuclear) inheritance

Match the pedigrees with the inheritance mode:
(assume all four traits are rare and completely penetrant)

- autosomal dominant
- autosomal recessive
- X-linked dominant
- X-linked recessive

pedigree 2

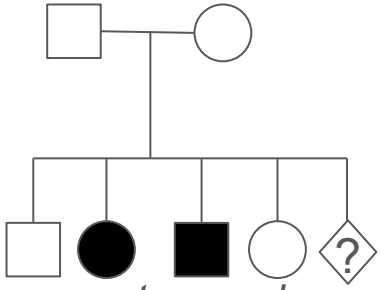

autosomal recessive

pedigree 4

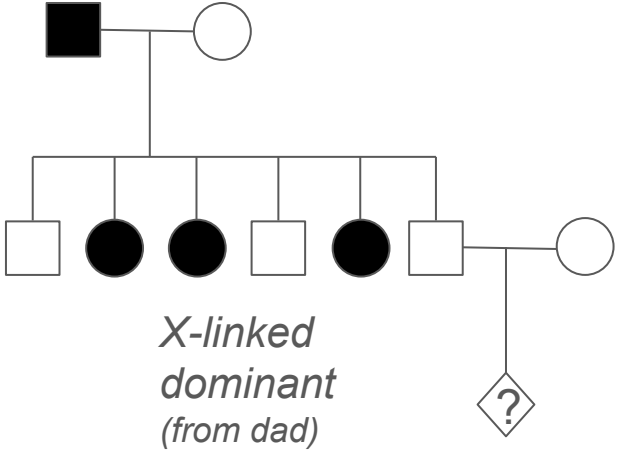

X-linked dominant
(from dad)

pedigree 1

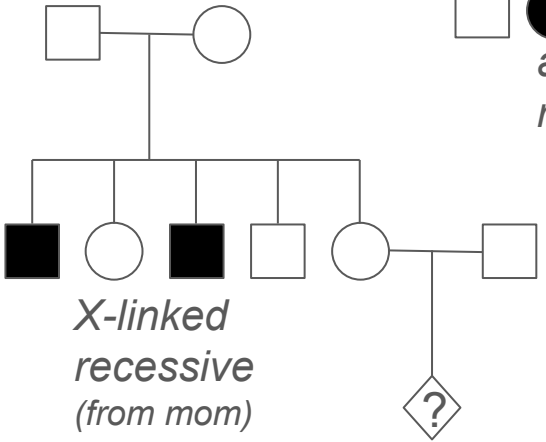

X-linked recessive
(from mom)

pedigree 3

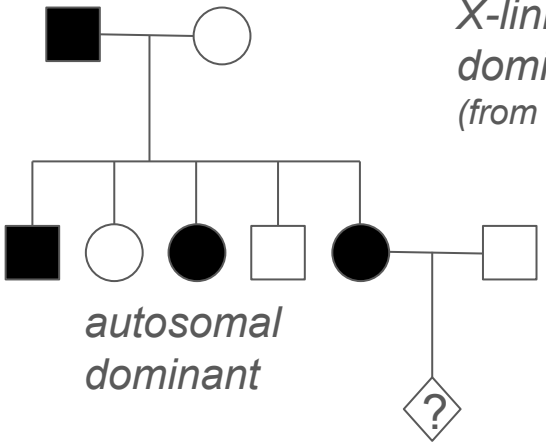

autosomal dominant

One example problem on (nuclear) inheritance

Match the pedigrees with the inheritance mode:
(assume all four traits are rare and completely penetrant)

- autosomal dominant
- autosomal recessive
- X-linked dominant
- X-linked recessive

pedigree 2

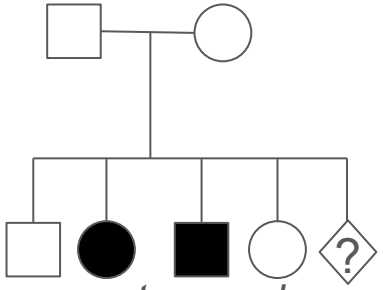

autosomal recessive

hint: parents not affected, both male and female offspring affected

pedigree 4

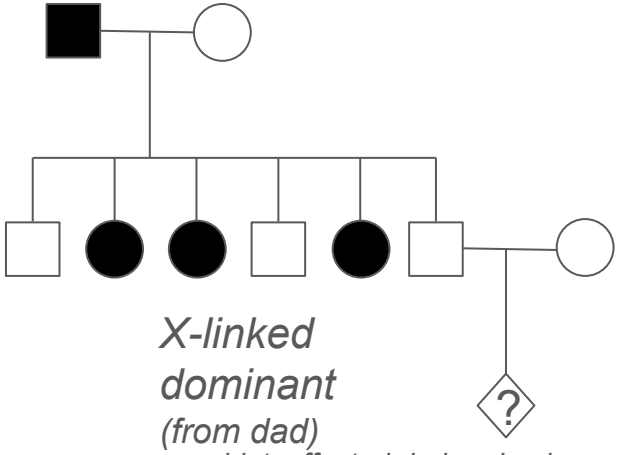

X-linked dominant
(from dad)

hint: affected dad and only female offspring are affected

pedigree 1

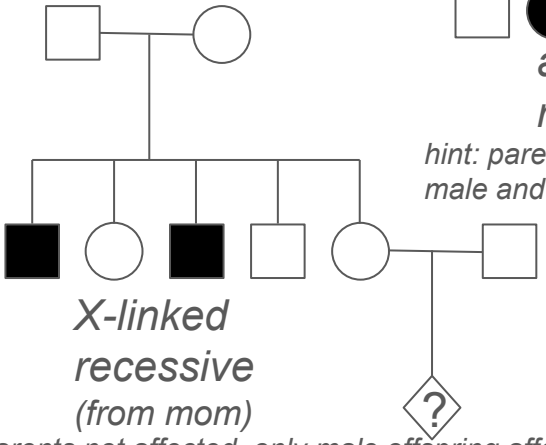

X-linked recessive
(from mom)

hint: parents not affected, only male offspring affected

pedigree 3

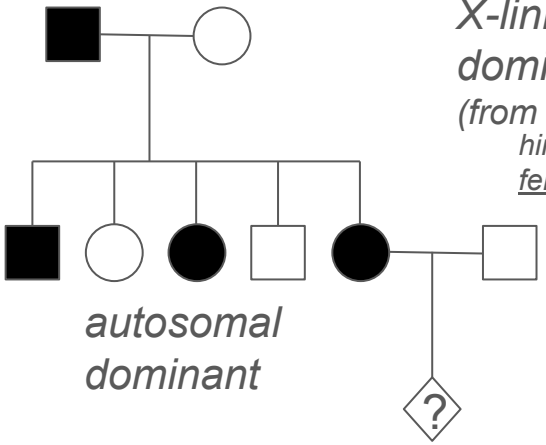

autosomal dominant

hint: affected dad, both male and female offspring affected
(not X-linked recessive because not all female offspring are affected)

One example problem on (nuclear) inheritance

What is the chance of the unknown offspring being affected, P(trait)?

pedigree 1

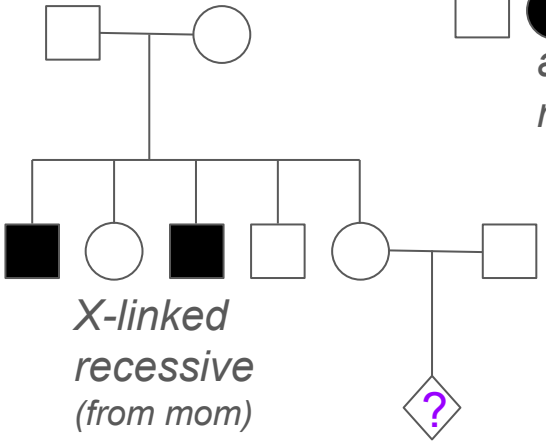

X-linked recessive
(from mom)

pedigree 2

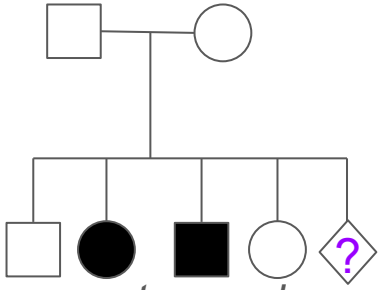

autosomal recessive

pedigree 3

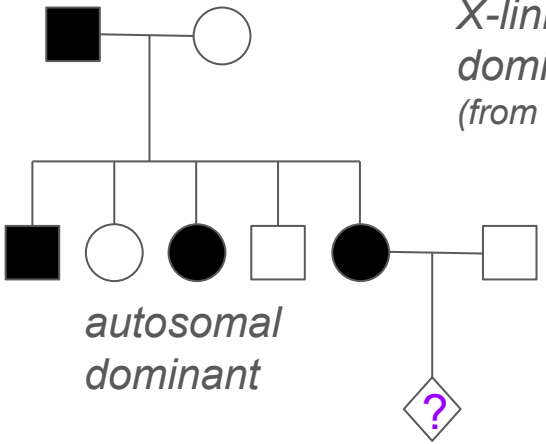

autosomal dominant

pedigree 4

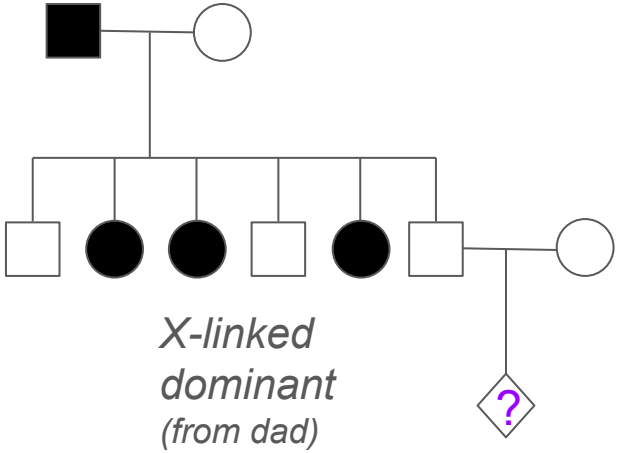

X-linked dominant
(from dad)

One example problem on (nuclear) inheritance

What is the chance of the unknown offspring being affected, P(trait)?

What are the known genotypes?

pedigree 1

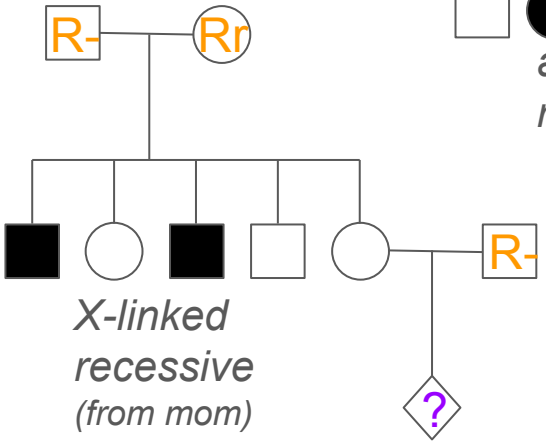

X-linked recessive
(from mom)

pedigree 2

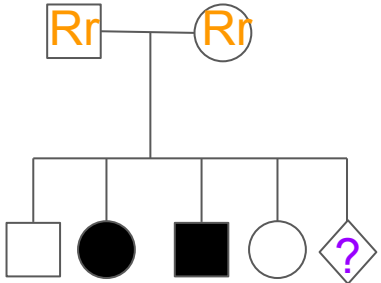

autosomal recessive

pedigree 3

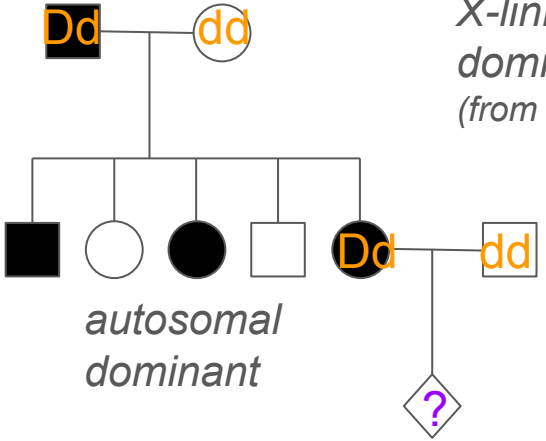

autosomal dominant

pedigree 4

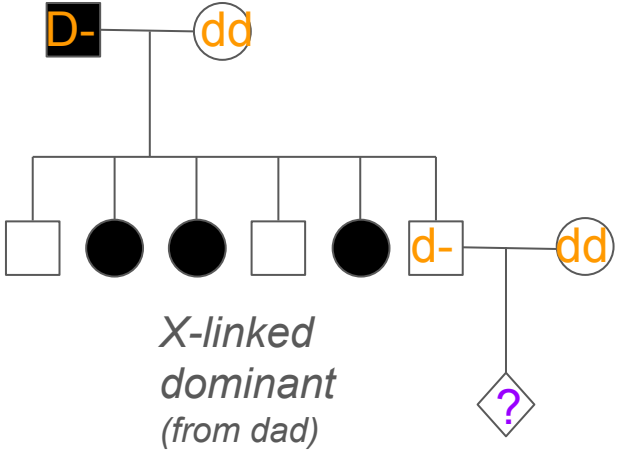

X-linked dominant
(from dad)

One example problem on (nuclear) inheritance

What is the chance of the unknown offspring being affected, P(trait)?

pedigree 1

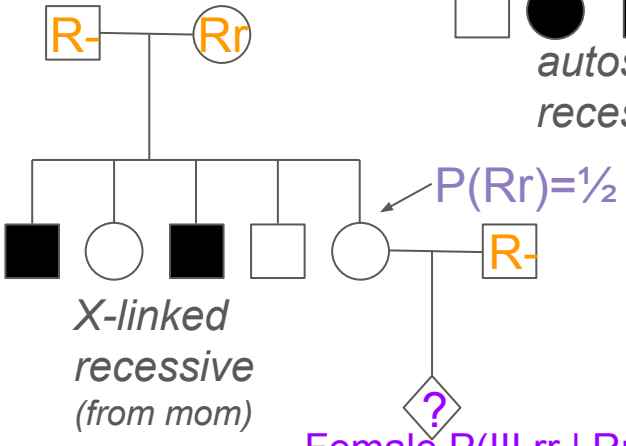

X-linked recessive
(from mom)

Female P(III rr | Rr and R- parents)= 0
Male P(III r-| Rr mom)= ½ * ½ = ¼

pedigree 2

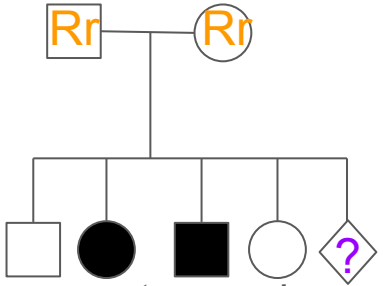

autosomal recessive

P(II rr)=¼

pedigree 3

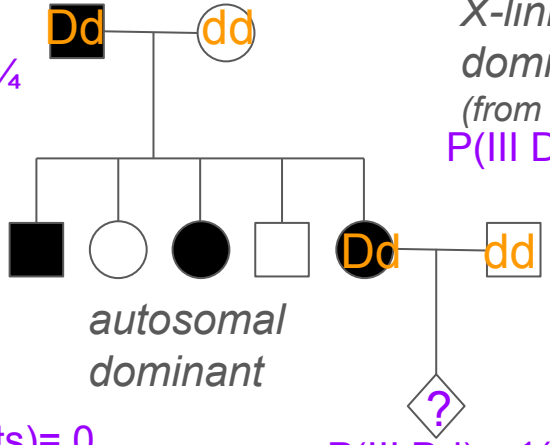

autosomal dominant

P(III Dd) = ½

pedigree 4

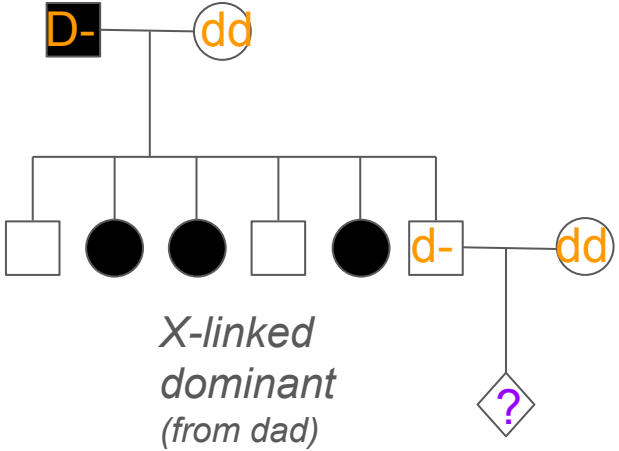

X-linked dominant
(from dad)

P(III DD,Dd, or D-)= 0+0+0

One example problem on (nuclear) inheritance

What is the chance of the unknown offspring being affected, P(trait)?

The importance of determining inheritance mode first:

pedigree 1

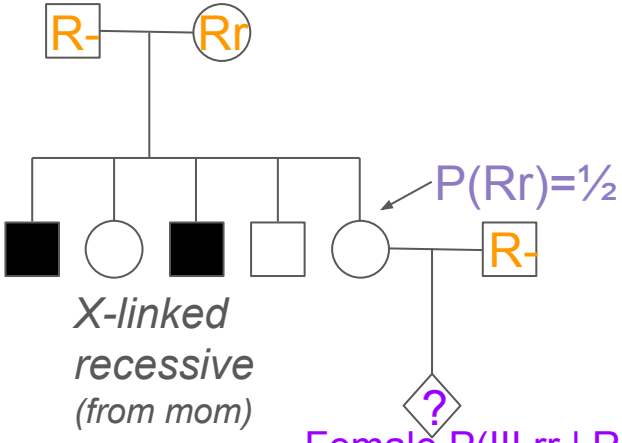

X-linked recessive
(from mom)

	R	R
-	R-	R-
R	RR	Rr

Male offspring

Female offspring…
affected (rr) is impossible
(no conditional probability for gen II)

Female P(III rr | Rr and R- parents)= 0
Male P(III r-| Rr mom)= ½ * ½ = ¼

Mitochondrial trait inheritance

- Mitochondria organelles encode their own genome
- Only maternal mitochondria are transmitted to offspring
  - Paternal mitochondria are eliminated

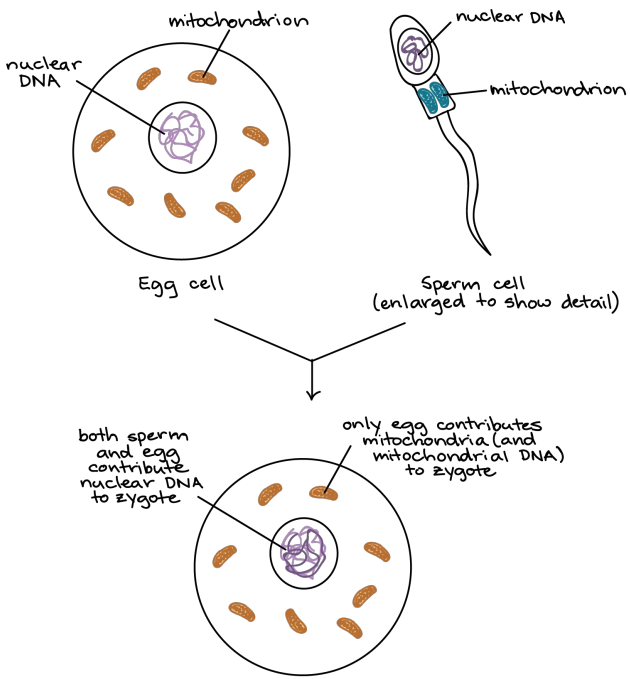

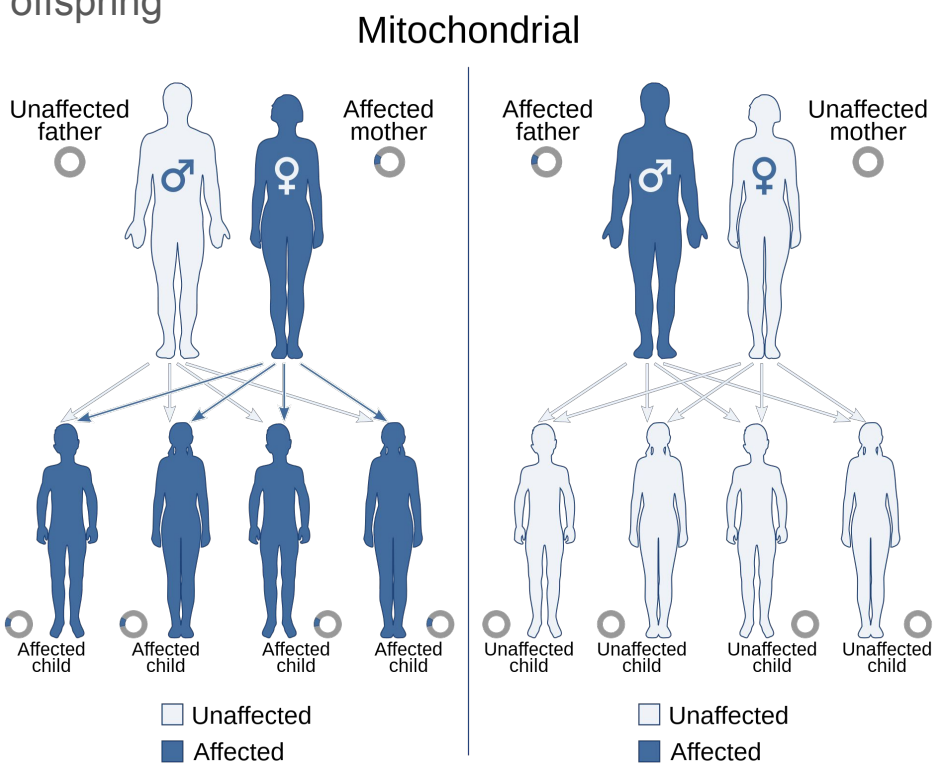

Mitochondrial trait inheritance

- Mitochondria organelles encode their own genome
- Only maternal mitochondria are transmitted to offspring
  - Paternal mitochondria are eliminated

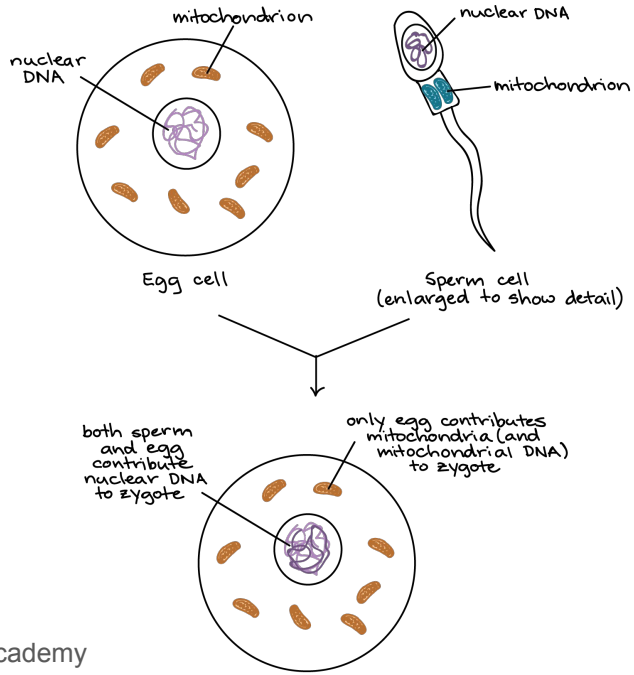

Khan Academy

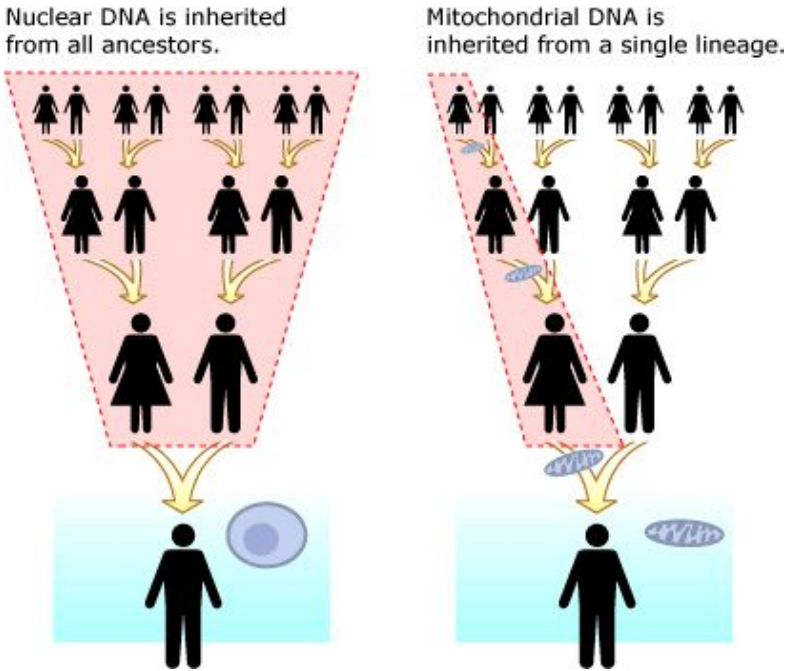

University of California Museum of Paleontology (CC BY-SA 3.0)

Mitochondrial trait inheritance

The human genome's forgotten DNA

The eukaryotic cell arose through the amalgamation of two separate life forms: an archaeon that gave rise to the nucleus and cytosol, and an α-proteobacterium that gave rise to the mitochondrion. Over the approximately 2.5 billion years of eukaryotic-cell evolution, the nucleus became specialized in encoding the anatomical elements of the cell, whereas the mitochondrion became specialized in encoding the core energy elements[1].

The nDNA encompasses thousands of anatomical genes, which include the structural proteins for the mitochondrion and the enzymes for mtDNA maintenance and expression. The mtDNA contains only 13 polypeptide genes, but they are present in hundreds to thousands of copies per cell. The mtDNA polypeptides are central electron- and proton-transport proteins for the mitochondrial energy-generating process, oxidative phosphorylation (OXPHOS). Thus, mtDNA can be thought of as the wiring diagram of the mitochondrial 'power plant'[1].

Wallace 2018 Nature Genetics

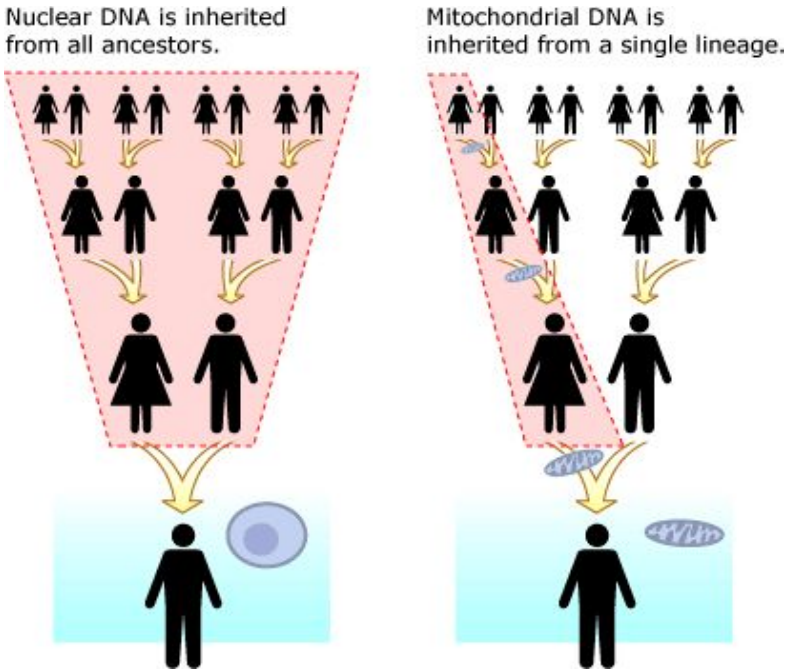

University of California Museum of Paleontology (CC BY-SA 3.0)

Mitochondrial trait inheritance

- The nuclear genome is 2N with highly accurate segregation mechanisms
- Mitochondrial genomes are many, 10-100s, of N with stochastic segregation

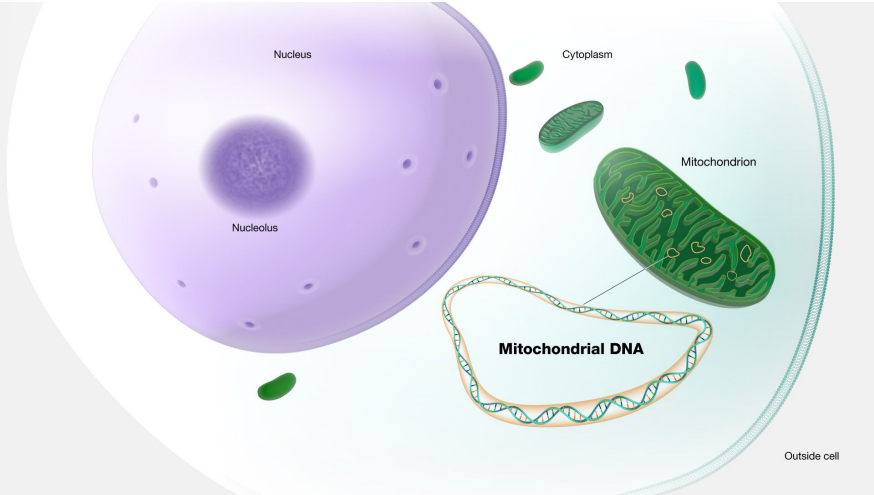

Darryl Leja, NHGRI

- The proportion of diseased mitochondrial genomes can change in frequency
  - <u>Within a generation</u>
  - Between generations

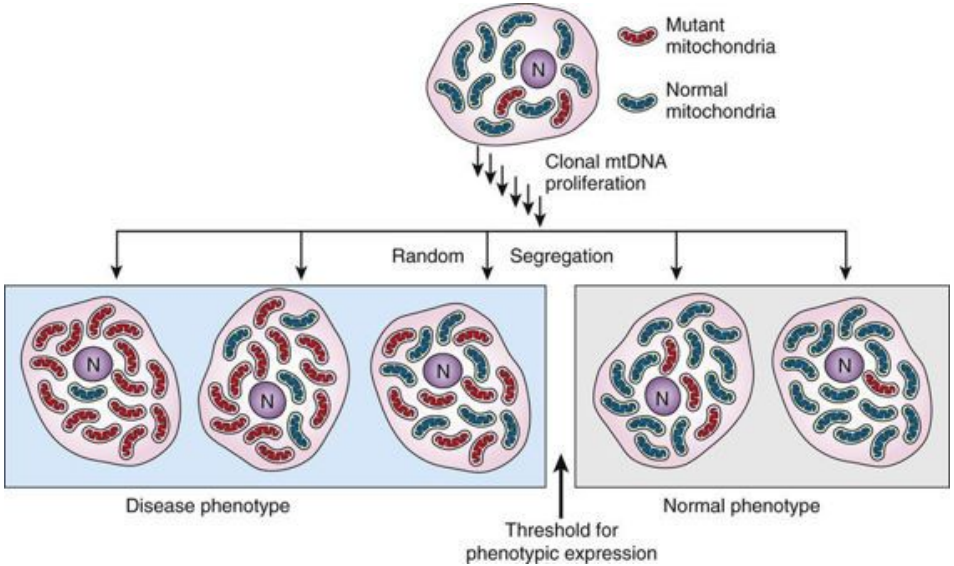

Muscular Dystrophy Association website

Mitochondrial trait inheritance

- The proportion of diseased mitochondrial genomes can change in frequency
  - Within a generation
  - <u>Between generations</u>

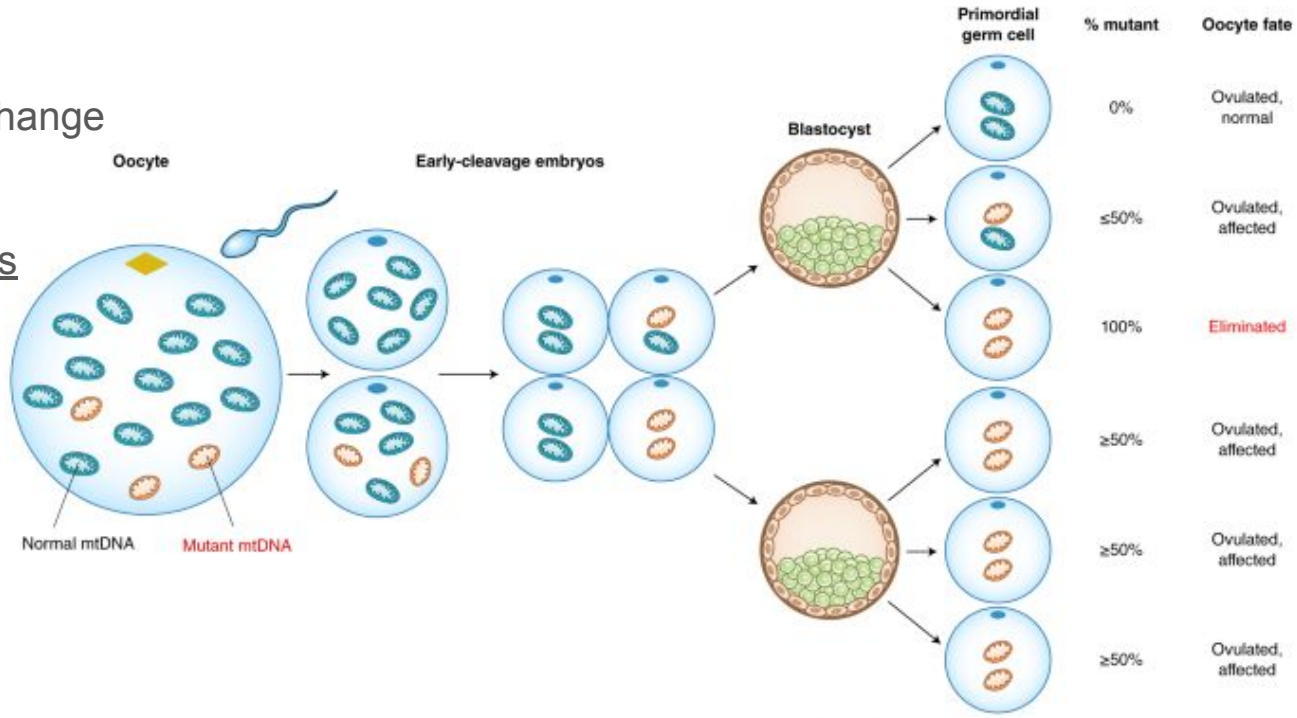

Wallace 2018 Nature Genetics

In preparation for the next class: how did we assemble the human genome?

- Original draft completed in 2000
  - Sanger sequencing-based (100-1kb reads)
  - Repetitive regions were unassembled
    - Centromeres
    - Telomeres
- First complete, telomere-to-telomere assembly complete in 2021
  - Long-read-based
    - PacBio HiFi long reads (10–25kb)
    - Nanopore ultra-long reads (10-300kb)
  - Assembly assisted with Hi-C chromatin contact maps
- Both efforts led by UCSC scientists
  - David Haussler in 2000
  - Karen Miga in 2022

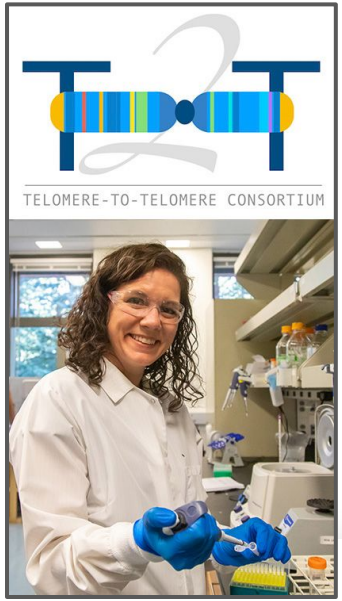

UC SANTA CRUZ

MyUCSC People Calendars Maps A-Z Index Search news

NEWSCENTER

Awards & Honors Events Videos Subscribe Contact Us Helpful Links

Home / 2022 / March / First complete, gapless sequence of a human genome reveals hidden regions

First complete, gapless sequence of a human genome reveals hidden regions

Parts of the human genome now available to study for the first time are important for understanding genetic diseases, human diversity, and evolution

March 31, 2022
By Tim Stephens

SHARE THIS STORY:

The first truly complete sequence of a human genome, covering each chromosome from end to end with no gaps and unprecedented accuracy, is now accessible through the UCSC Genome Browser and is described in six papers published March 31 in *Science*.

Since the first working draft of a human genome sequence was assembled at UC Santa Cruz in 2000, genomics research has

How Scientists Finally Finished the Human Genome

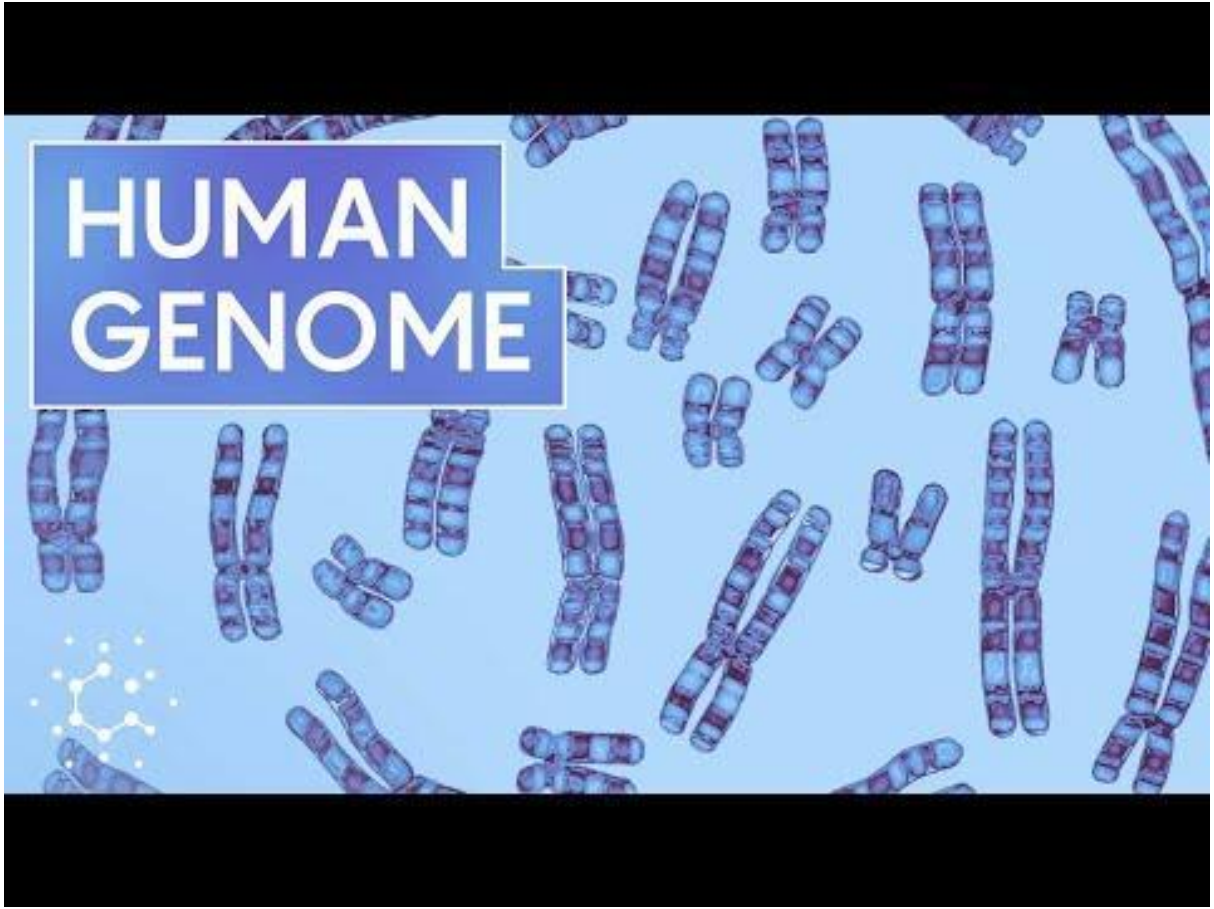

Quanta Magazine: https://www.youtube.com/watch?v=meppRKz50lc, Sep 8, 2021

For Monday’s class:

1. Read in Genetics: From Genes to Genomes
   a. Finish Chapter 4.6-4.7
   b. Start Chapter 9.1-9.4

2. Start working on Problem Set 3: Pedigrees and conditional probability

3. Consider forming a study group