BME 105: Genetics in the Genomics Era

Lecture 3: Determining the probability of an affected offspring

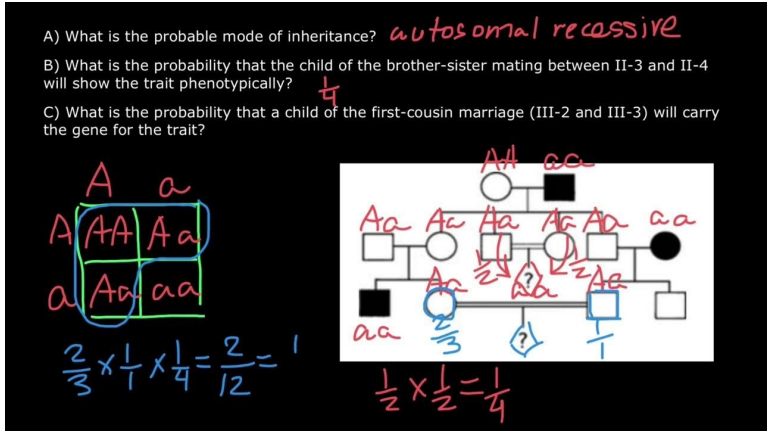

Instructor: Dr. Shelbi Russell,
Assistant Professor

Course website on canvas.ucsc.edu

Some slides modified from Angela Brooks

Lecture 3 Learning Objectives

- Understand conditional probability as it applies to pedigree analysis: if you can rule out a genotype, then you calculate the probability of a trait over the reduced denominator.
- Be able to read a pedigree to infer the location of the allele on an autosome or sex chromosome
- Become fluent in pedigree analysis - practice, practice, practice!
- Understand how mitochondrial inheritance is different from nuclear chromosomal inheritance.
    - Be able to answer: Why is mitochondrial trait inheritance not Mendelian?

In this autosomal recessive disease, what is the probability that each child in the third generation is affected?

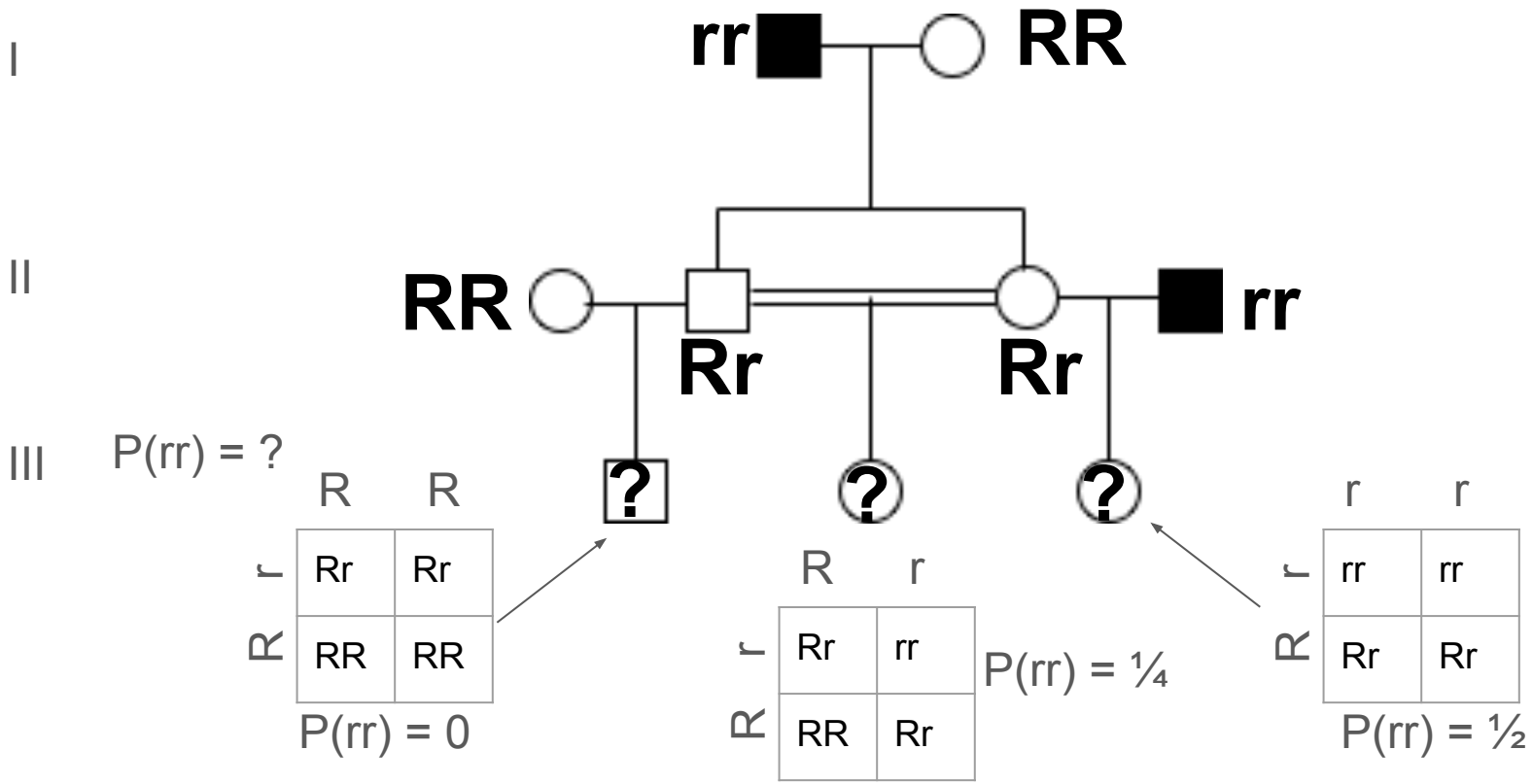

Calculating conditional probabilities from pedigrees

Product rule:

P(A **and** B) = P(A) * P(B) if A and B are independent

Sum rule:

P(A **or** B) = P(A) + P(B) if A and B are mutually exclusive

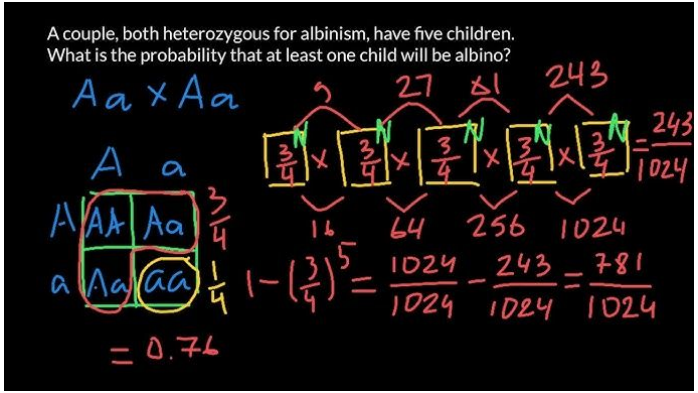

Now we will introduce **conditional probability,** allowing us to compute P(A) or P(B) <u>when A and B are not independent.</u>

P(A given B has occurred) = P(A and B | B) = P (A and B) * P(B)

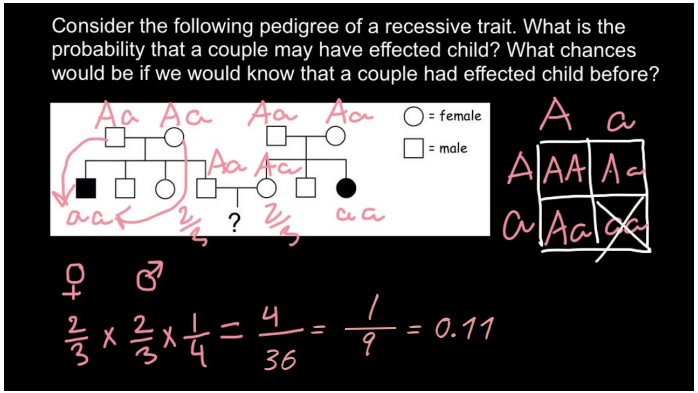

What if A and B are independent?
Then it looks just like the product rule.

In this pedigree, what is the probability that each child in the third generation is affected?

I

II P(Rr) = ?

III P(rr) = ?

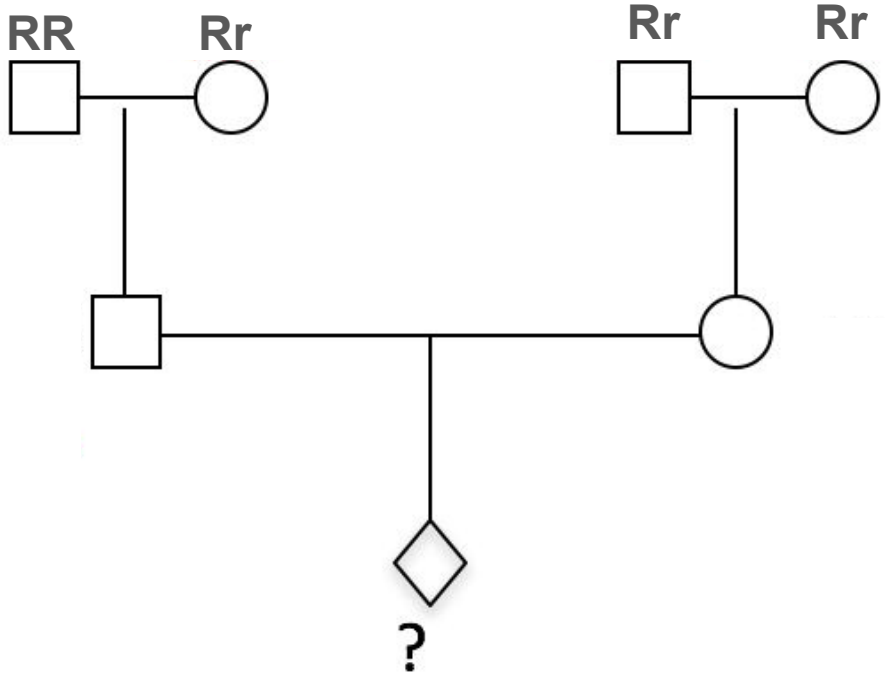

To consider:

1. Is this an autosomal dominant or recessive disease?
   ⇒ recessive
2. Are any of the sampled individuals affected?
   ⇒ no (b/c recessive)
3. How would generation III individuals acquire the trait?
   ⇒ parents are both carriers

In this pedigree, what is the probability that each child in the third generation is affected?

I

II P(Rr) = 1/2

III P(rr) = ?

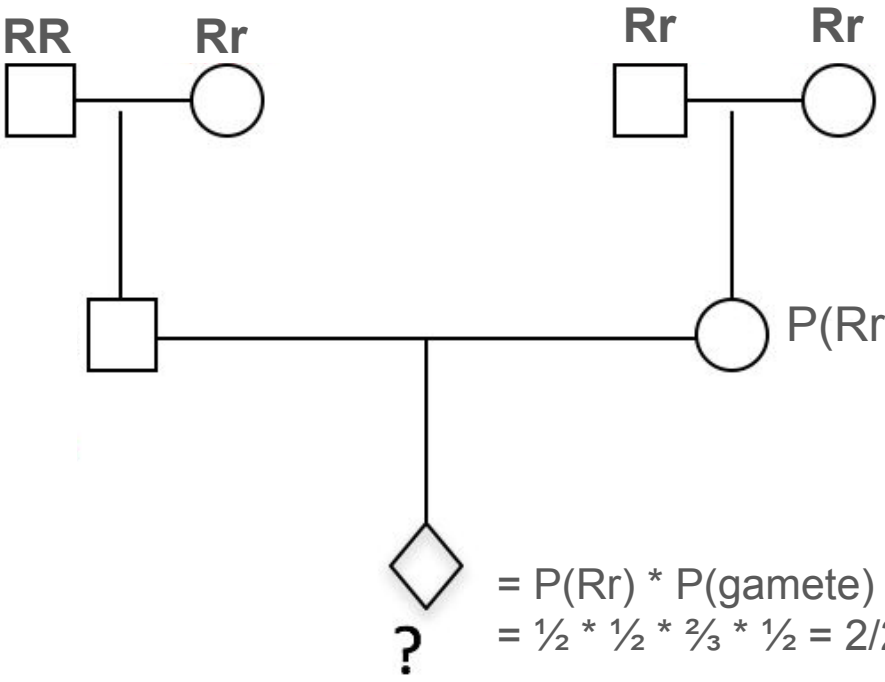

P(Rr|not rr) = 2/3

= P(Rr) * P(gamete) * P(Rr|not rr) *P(gamete)
= ½ * ½ * ⅔ * ½ = 2/24 = 1/12

In-class problem:

A young couple went to see a genetic counselor because each had a sibling with cystic fibrosis. Cystic fibrosis is a recessive disease, and neither member of the couple nor any of their four parents is affected. For the normal allele, use “+” and for the recessive allele use “CF”.

a. Draw the pedigree. Indicate genotypes, if known.

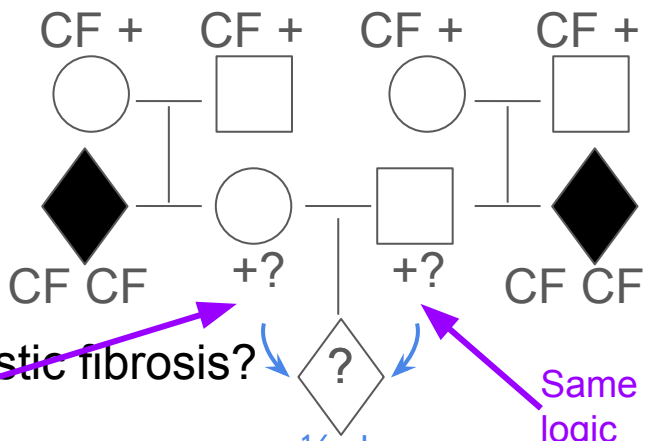

b. What are the chances that their child will have cystic fibrosis?

Not CF/CF
Only +/+ and CF/+ genotypes are possible:
⅔ of the options are CF/+ (+/+,CF/+,+/CF)

½ chance CF is transmitted

Same logic

*This is a question from Midterm 1, Spring 2019

P(III-1 CF/CF) = ⅔ * ½ * ⅔ * ½ = 4/36 = 1/9

Autosomal vs non-autosomal inheritance

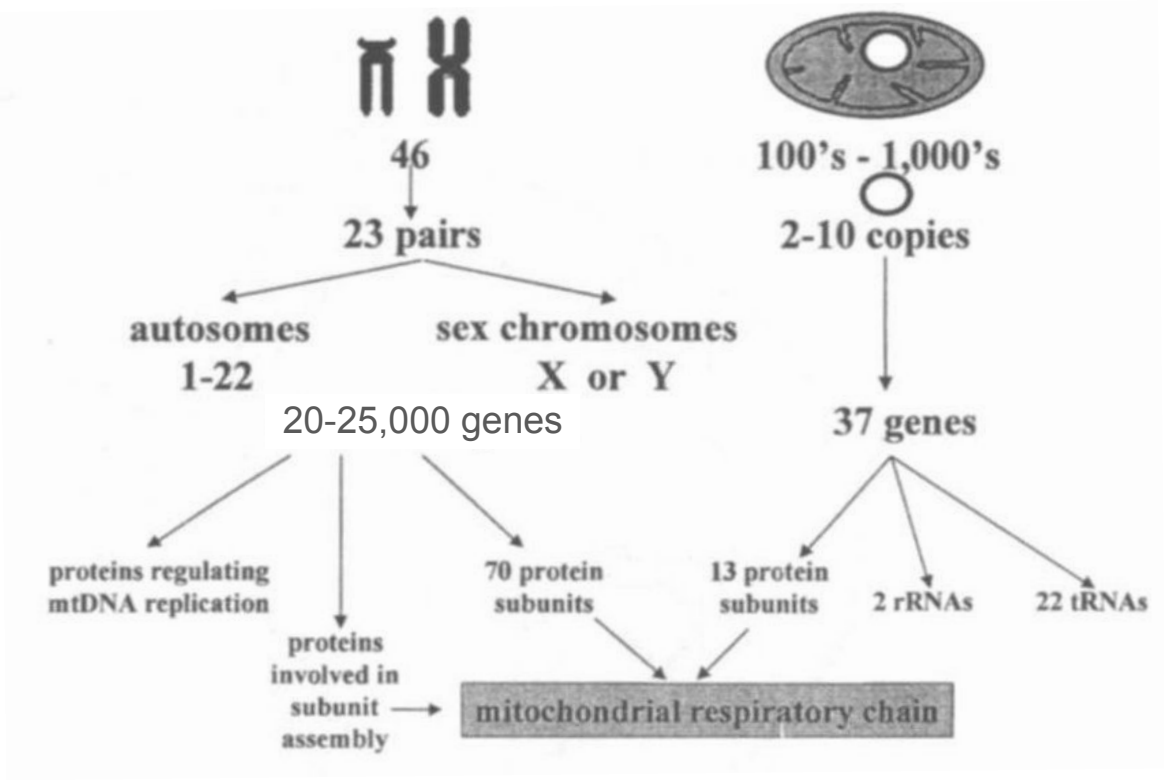

Christodoulou 2000 Human Reproduction

Autosomal vs sex chromosome traits

- Human females have two copies of the X
- Human males are <u>hemizygous</u> for the X chromosome
  - X and Y have homologous pseudoautosomal regions that allow them to pair during meiosis
- The absence of a homolog makes recessive X alleles dominant in males
  - Recessive deleterious X alleles are masked by the functional copy in heterozygous females

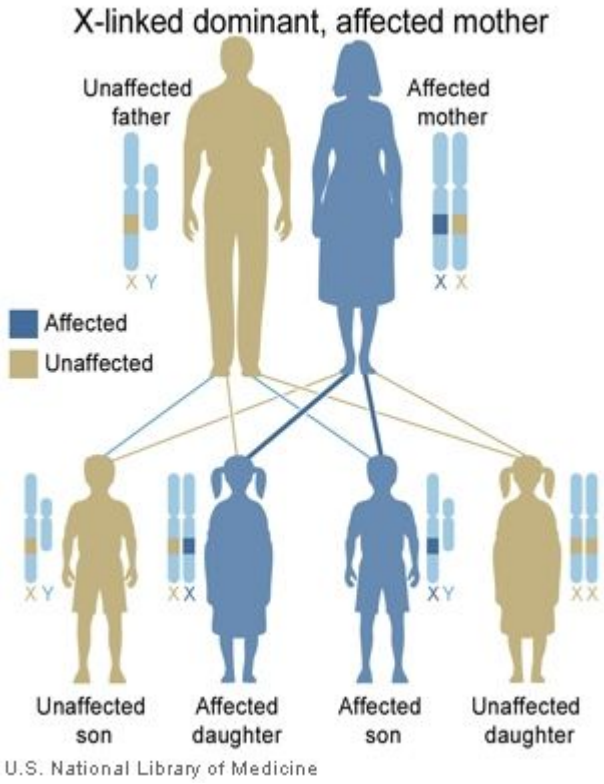

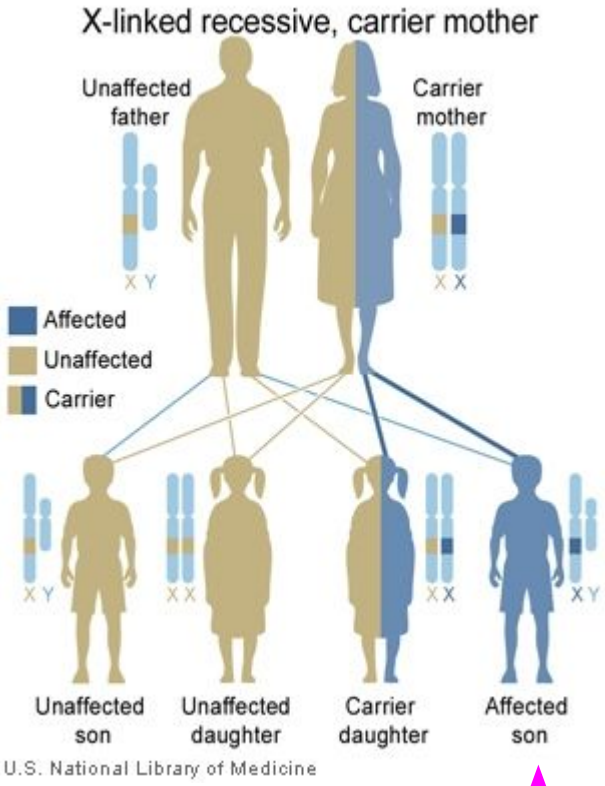

X-linked dominant inheritance patterns

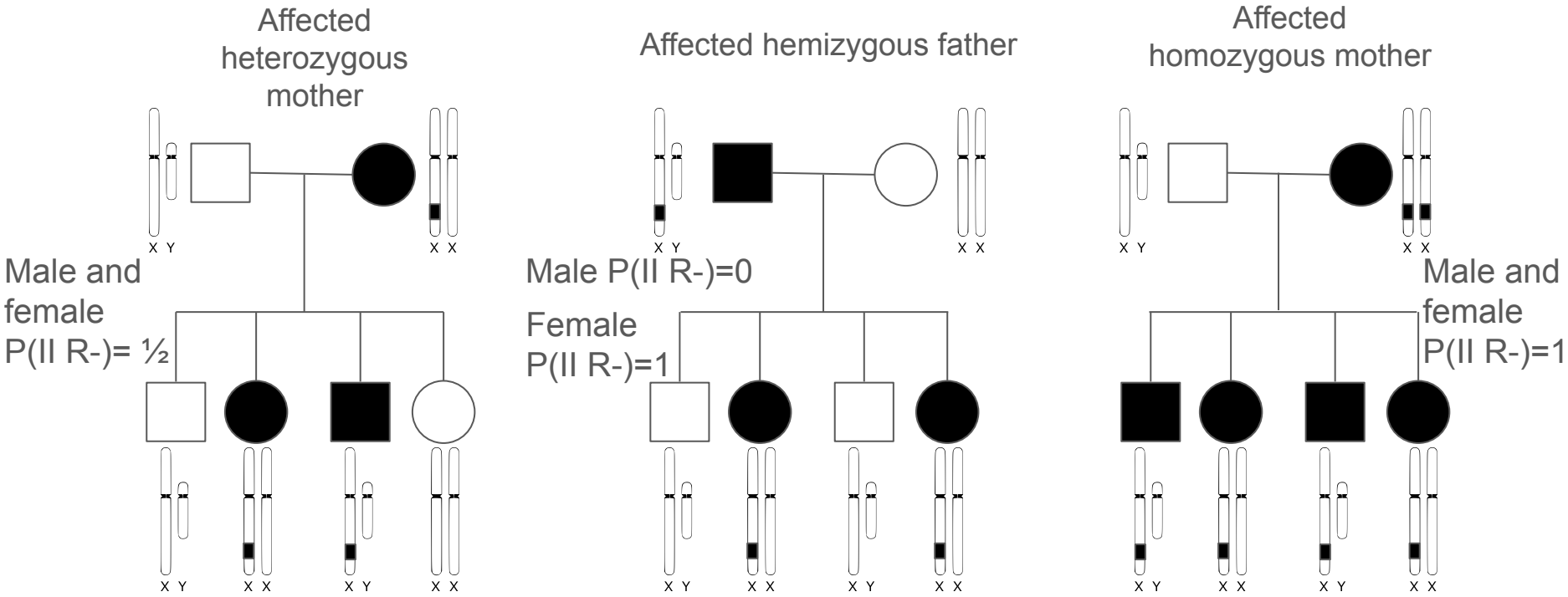

X-linked <u>dominant</u> inheritance patterns: <u>maternal</u> transmission probabilities same as autosomes

Affected heterozygous mother

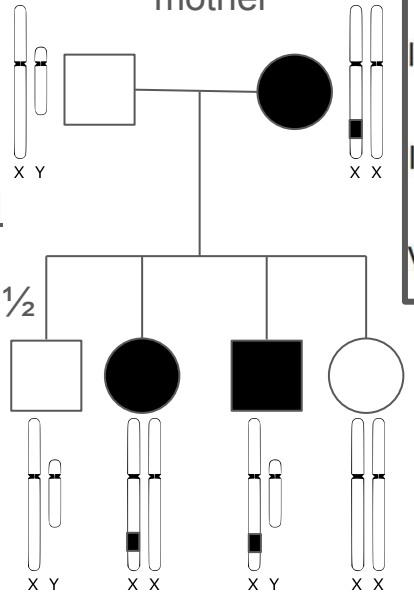

Male <u>and</u> female
P(II R-)= ½

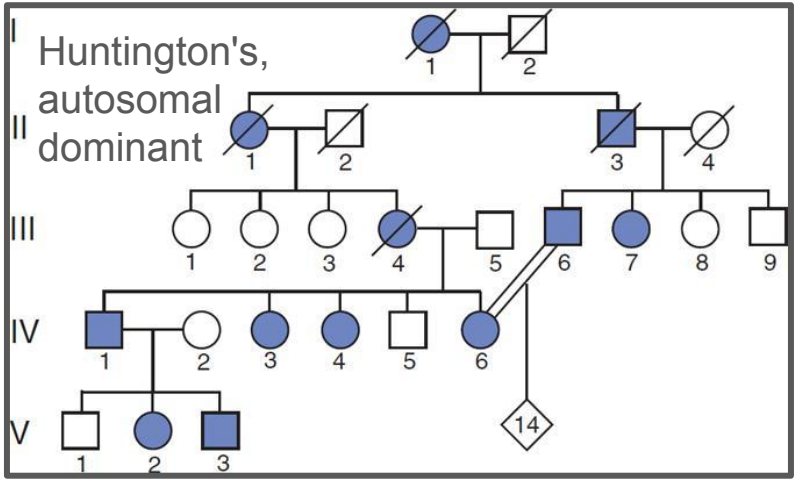

Affected homozygous mother

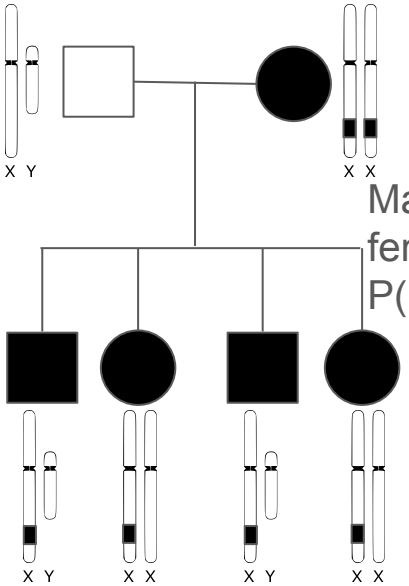

Male <u>and</u> female
P(II R-)=1

Autosomal dominant (male <u>and</u> female):

P(R-) from one heterozygous parent = ½

P(R-) from one homozygous parent = 1

X-linked <u>dominant</u> inheritance patterns: <u>paternal</u> transmission probabilities are distinct

Males only have one X to transmit

If an offspring receives a paternal X, then they are female

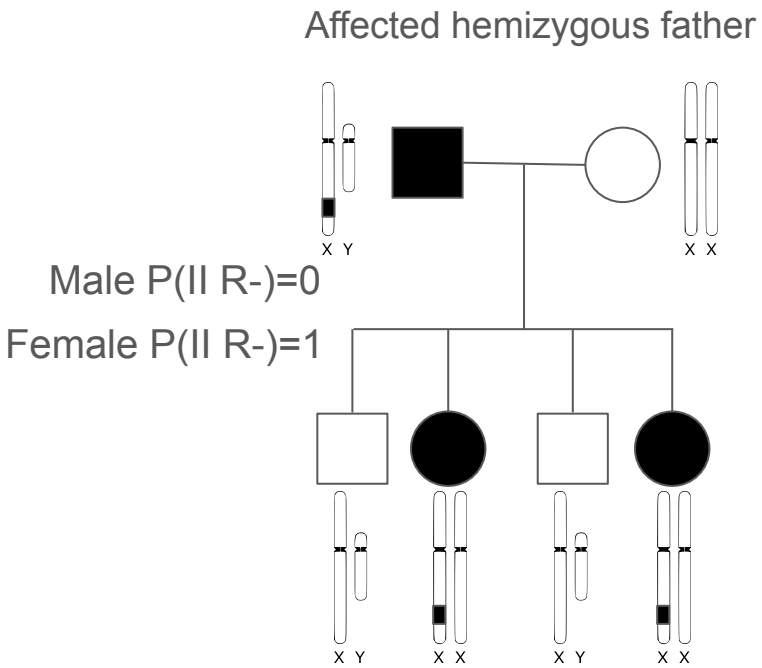

X-linked recessive inheritance patterns

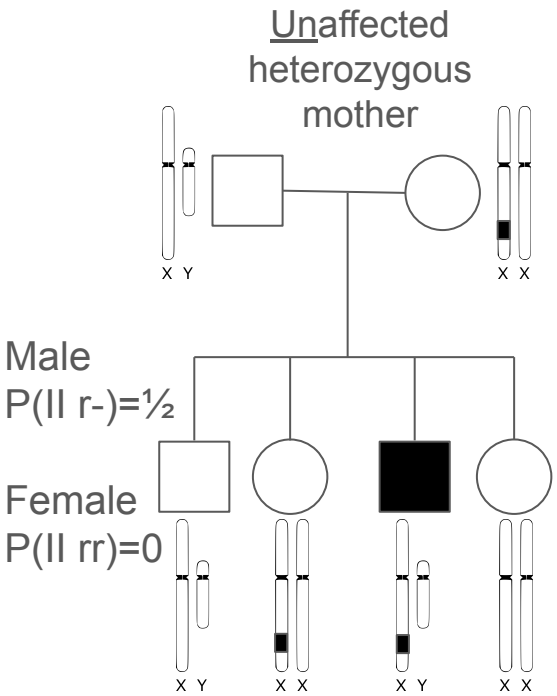

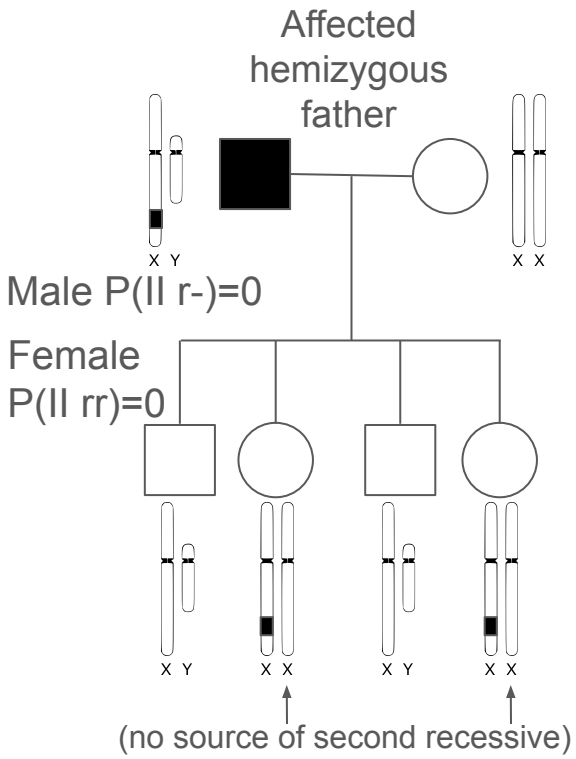

Recessive traits encoded on the X chromosome are "unmasked" in males

→ the trait appears dominant in males

Females can be carriers, males cannot

X-linked recessive inheritance patterns

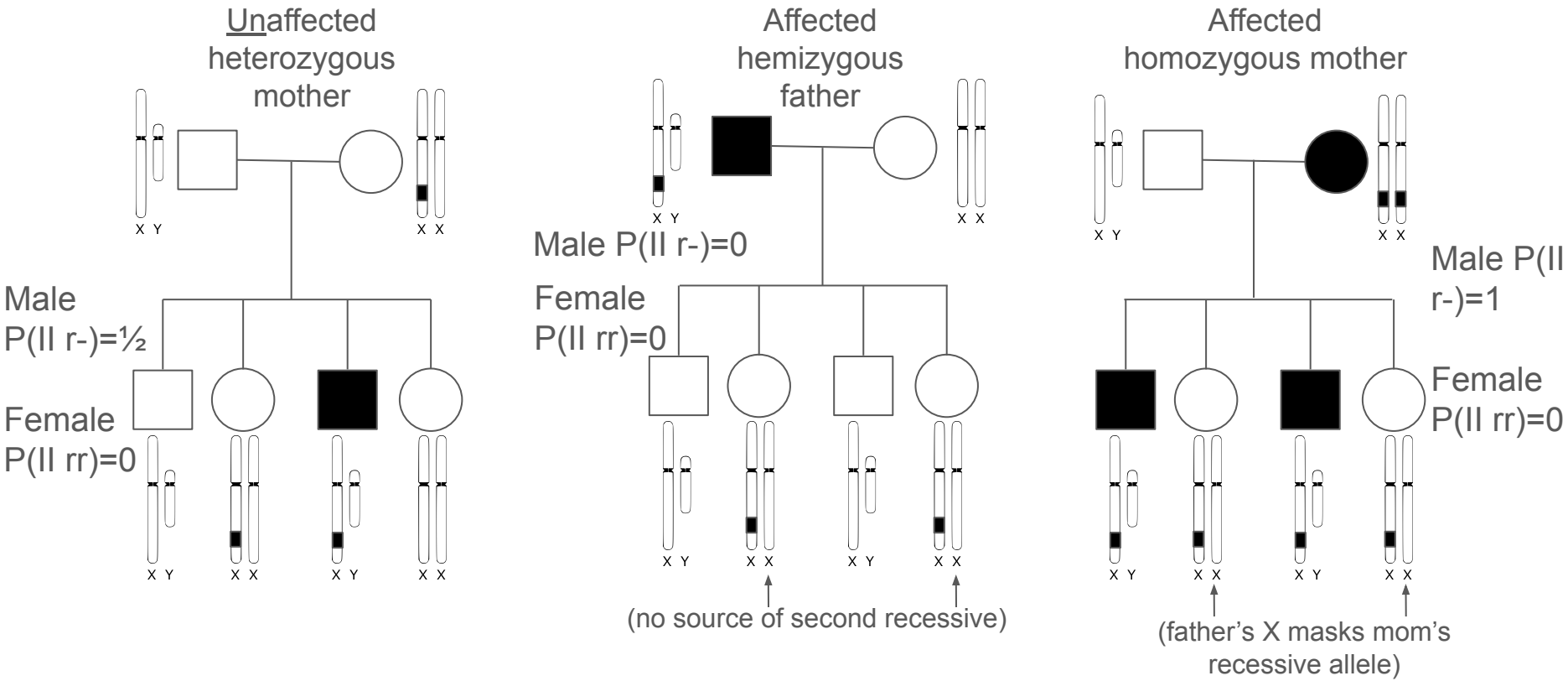

One example problem on (nuclear) inheritance

Match the pedigrees with the inheritance mode:
(assume all four traits are rare and completely penetrant)

- autosomal dominant
- autosomal recessive
- X-linked dominant
- X-linked recessive

pedigree 2

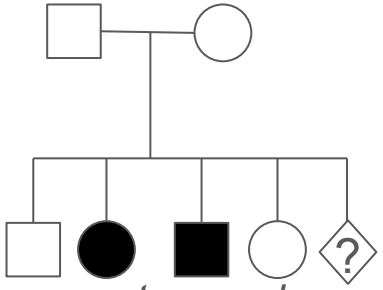

autosomal recessive

hint: parents not affected, both male and female offspring affected

pedigree 4

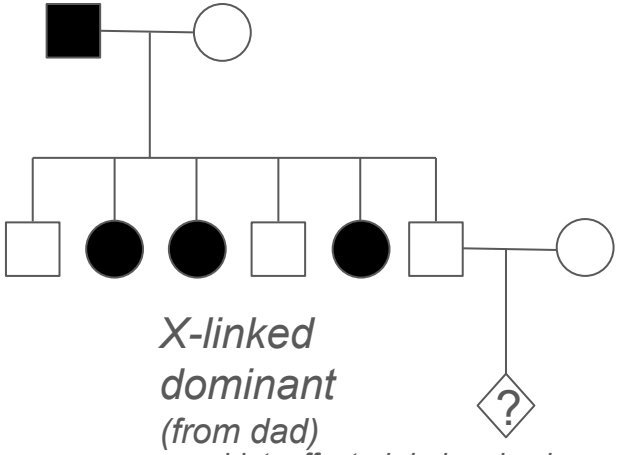

X-linked dominant
(from dad)

hint: affected dad and only female offspring are affected

pedigree 1

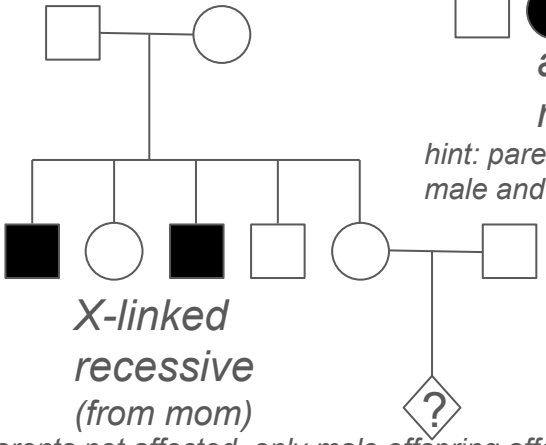

X-linked recessive
(from mom)

hint: parents not affected, only male offspring affected

pedigree 3

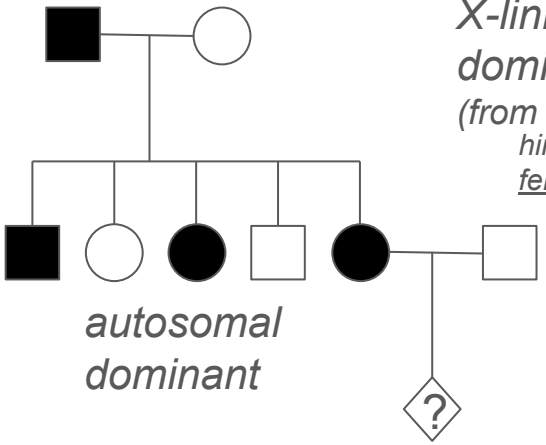

autosomal dominant

hint: affected dad, both male and female offspring affected
(not X-linked recessive because not all female offspring are affected)

One example problem on (nuclear) inheritance

What is the chance of the unknown offspring being affected, P(trait)?

pedigree 1

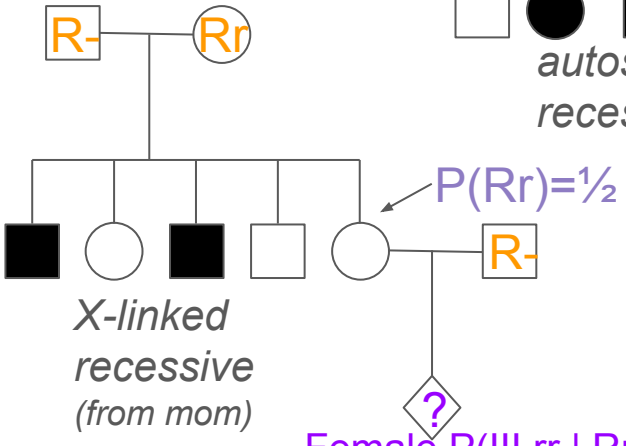

X-linked recessive
(from mom)

Female P(III rr | Rr and R- parents)= 0
Male P(III r-| Rr mom)= ½ * ½ = ¼

pedigree 2

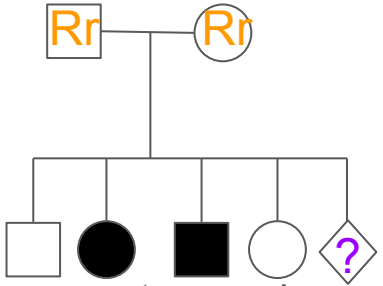

autosomal recessive

P(II rr)=¼

pedigree 3

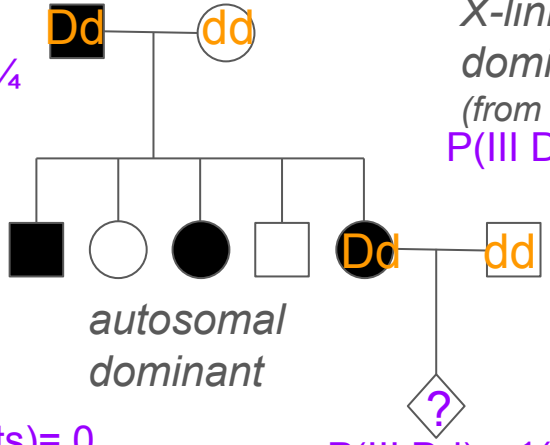

autosomal dominant

P(III Dd) = ½

pedigree 4

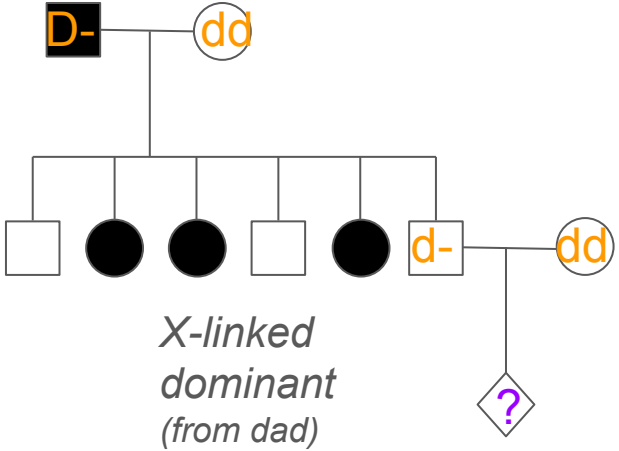

X-linked dominant
(from dad)

P(III DD,Dd, or D-)= 0+0+0

Mitochondrial trait inheritance

- Mitochondria organelles encode their own genome
- Only maternal mitochondria are transmitted to offspring
  - Paternal mitochondria are eliminated

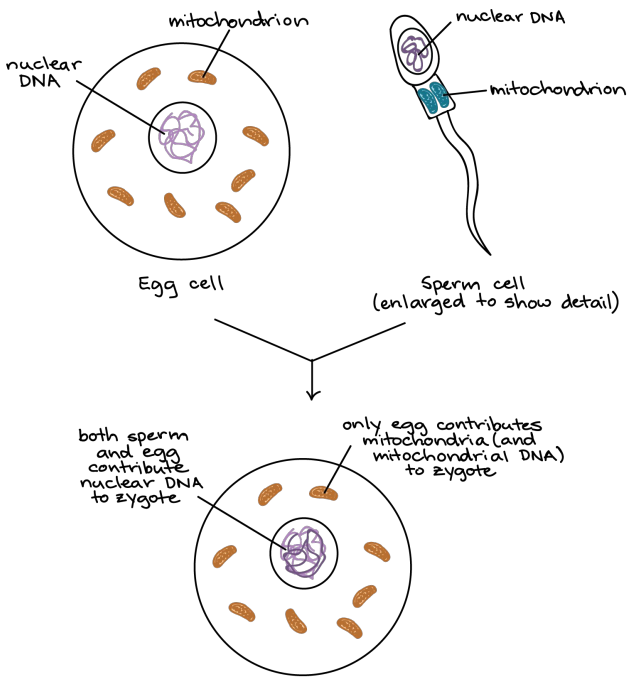

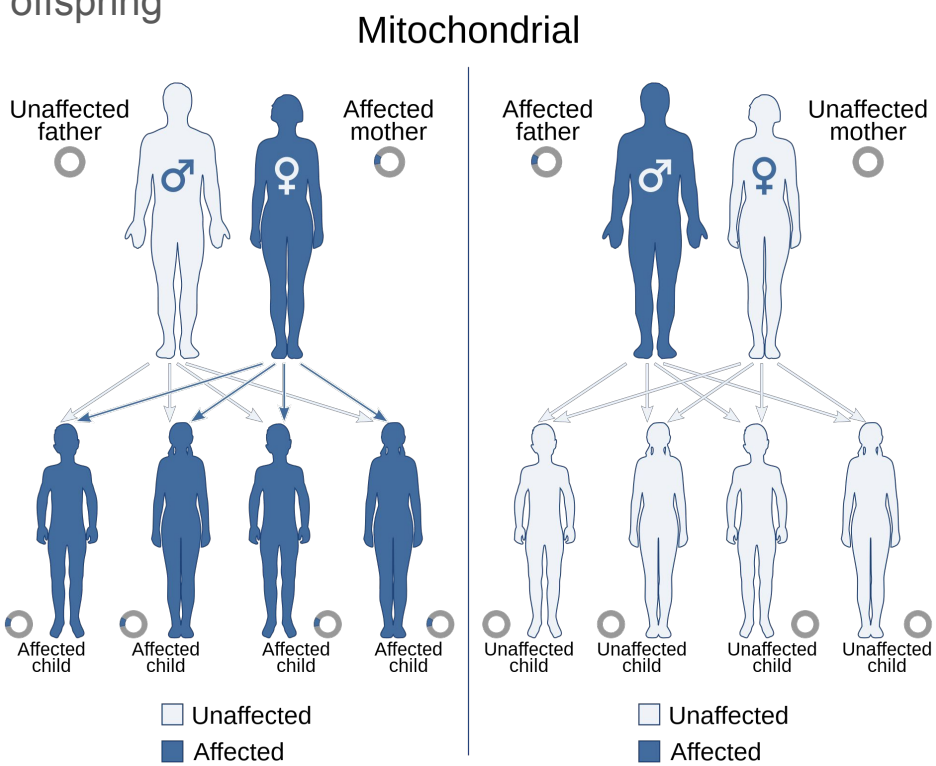

Mitochondrial trait inheritance

The human genome's forgotten DNA

The eukaryotic cell arose through the amalgamation of two separate life forms: an archaeon that gave rise to the nucleus and cytosol, and an α-proteobacterium that gave rise to the mitochondrion. Over the approximately 2.5 billion years of eukaryotic-cell evolution, the nucleus became specialized in encoding the anatomical elements of the cell, whereas the mitochondrion became specialized in encoding the core energy elements[1].

The nDNA encompasses thousands of anatomical genes, which include the structural proteins for the mitochondrion and the enzymes for mtDNA maintenance and expression. The mtDNA contains only 13 polypeptide genes, but they are present in hundreds to thousands of copies per cell. The mtDNA polypeptides are central electron- and proton-transport proteins for the mitochondrial energy-generating process, oxidative phosphorylation (OXPHOS). Thus, mtDNA can be thought of as the wiring diagram of the mitochondrial 'power plant'[1].

Wallace 2018 Nature Genetics

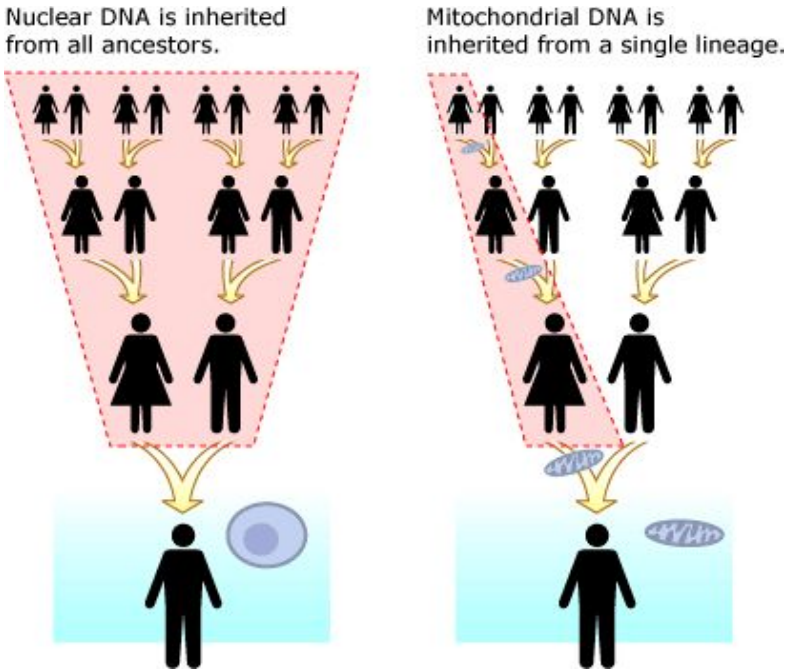

University of California Museum of Paleontology (CC BY-SA 3.0)

Mitochondrial trait inheritance

- The nuclear genome is 2N with highly accurate segregation mechanisms
- Mitochondrial genomes are many, 10-100s, of N with stochastic segregation

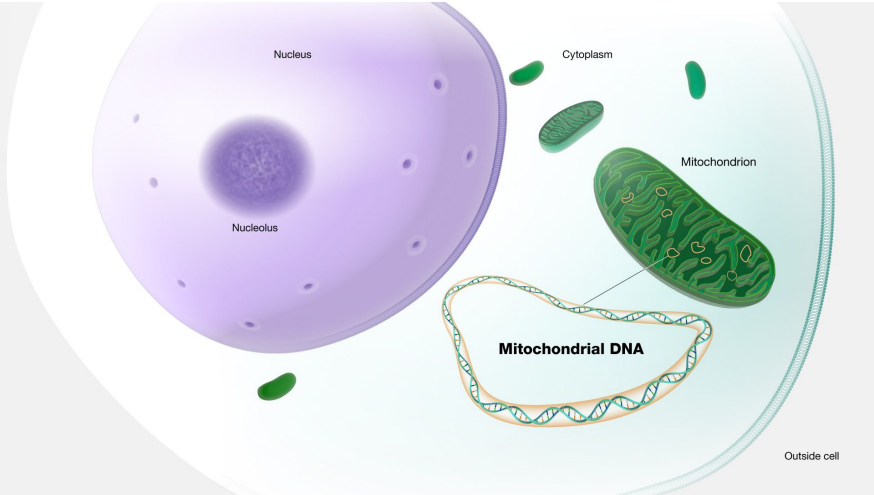

Darryl Leja, NHGRI

- The proportion of diseased mitochondrial genomes can change in frequency
  - <u>Within a generation</u>
  - Between generations

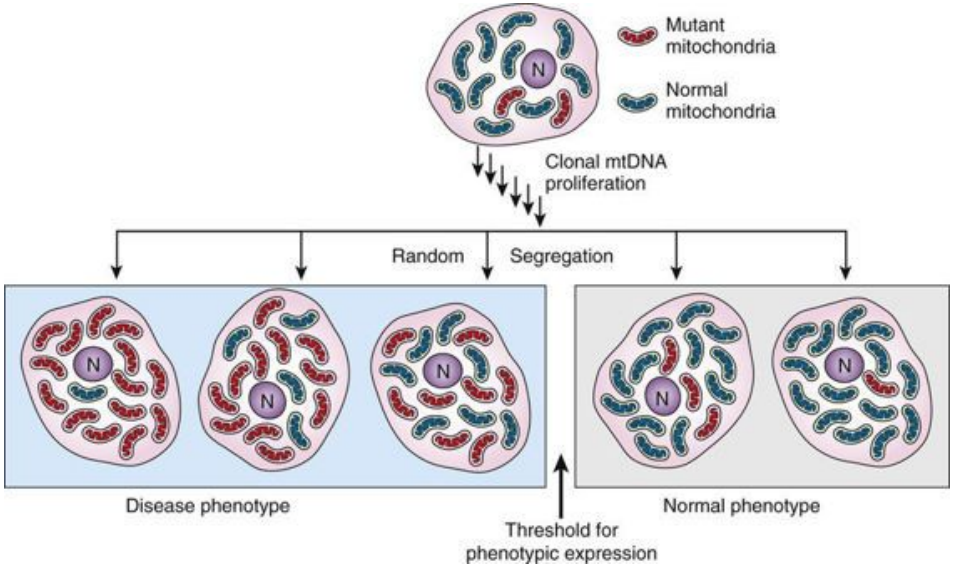

Muscular Dystrophy Association website

Mitochondrial trait inheritance

- The proportion of diseased mitochondrial genomes can change in frequency
  - Within a generation
  - <u>Between generations</u>

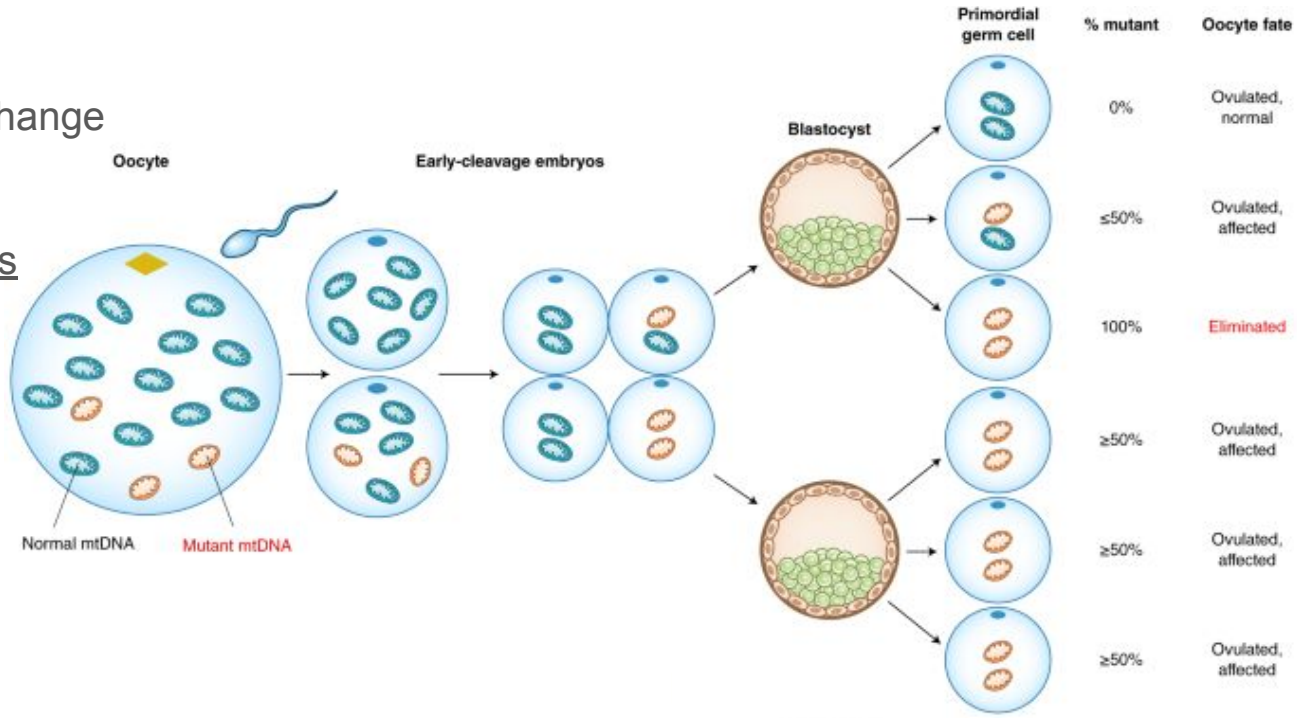

Wallace 2018 Nature Genetics