Adapting **RNNs** to various tasks by **modifying the encoder embedding**

Sahana Ramnath

Pre-requisites: Working of RNN

Recurrent Neural Network

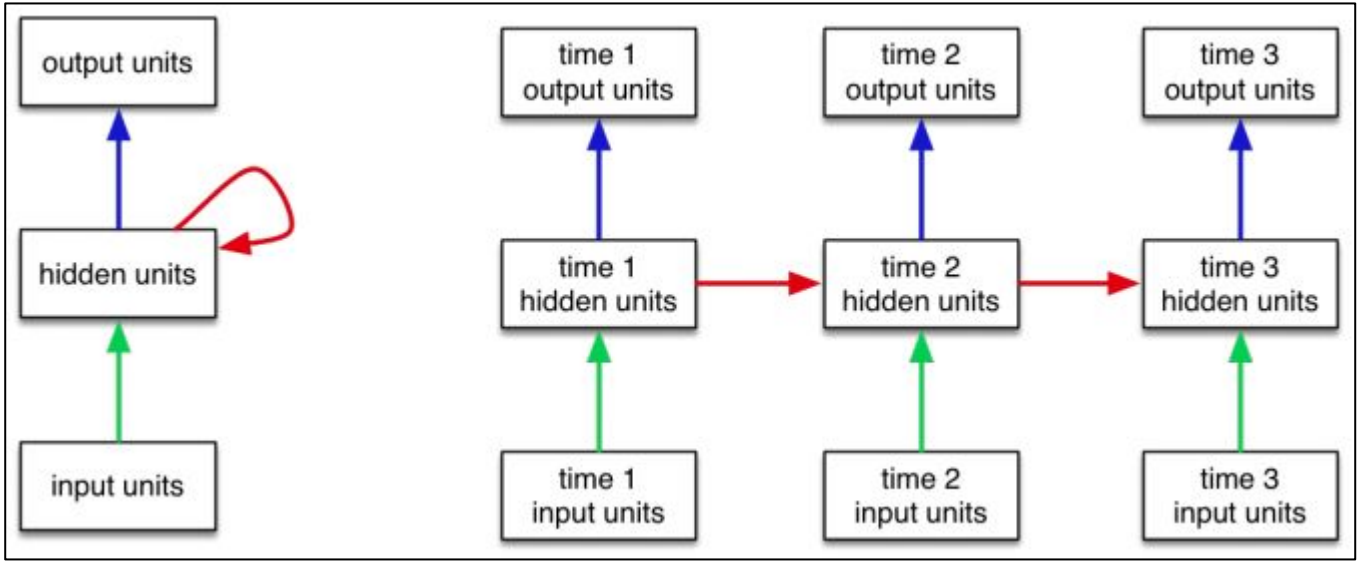

Image source: https://www.cs.toronto.edu/~lczhang/aps360_20191/lec/w08/rnn.html

Adapting RNNs to: Text Sequence-to-Sequence

Sequence to sequence models are an instance of RNNs where both the input and output are ***text sequences***.

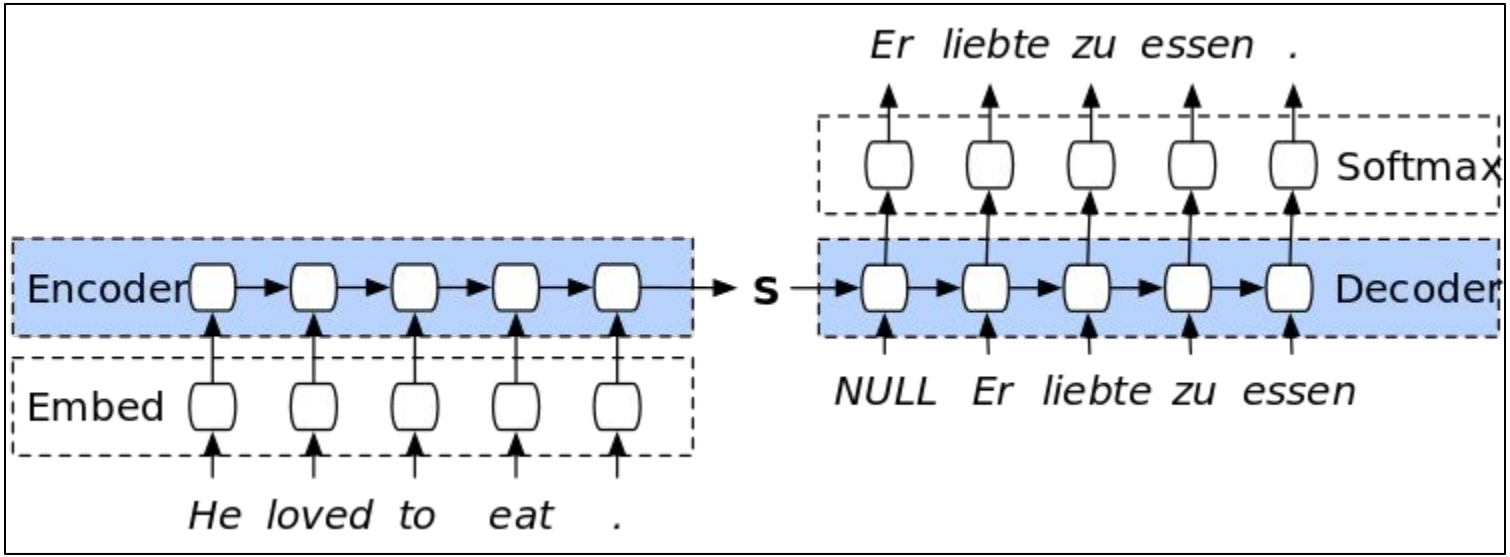

Image source: https://www.nbshare.io/notebook/313339236/English-to-German-Translation-using-Seq2Seq-Models-In-PyTorch/

Adapting RNNs to: Text Sequence-to-Sequence

Sequence to sequence models are an instance of RNNs where both the input and output are ***text sequences***.

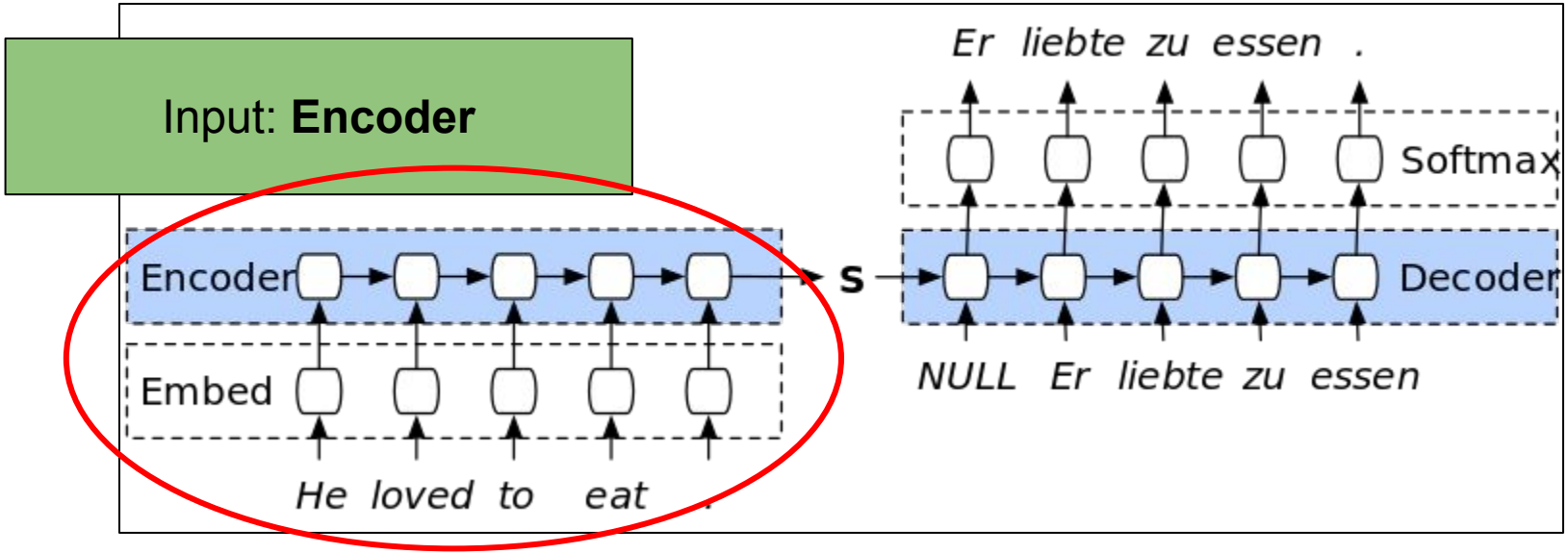

Image source: https://www.nbshare.io/notebook/313339236/English-to-German-Translation-using-Seq2Seq-Models-In-PyTorch/

Adapting RNNs to: Text Sequence-to-Sequence

Sequence to sequence models are an instance of RNNs where both the input and output are ***text sequences***.

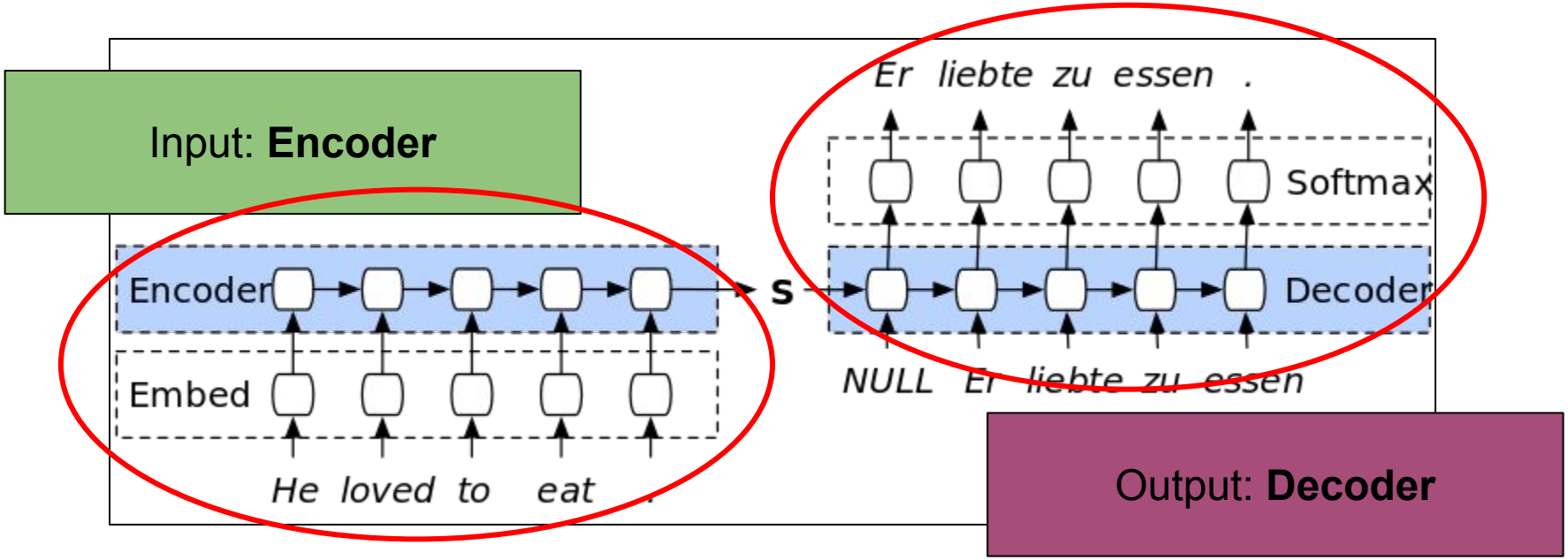

Image source: https://www.nbshare.io/notebook/313339236/English-to-German-Translation-using-Seq2Seq-Models-In-PyTorch/

Adapting RNNs to: Text Sequence-to-Sequence

Sequence to sequence models are an instance of RNNs where both the input and output are ***text sequences***.

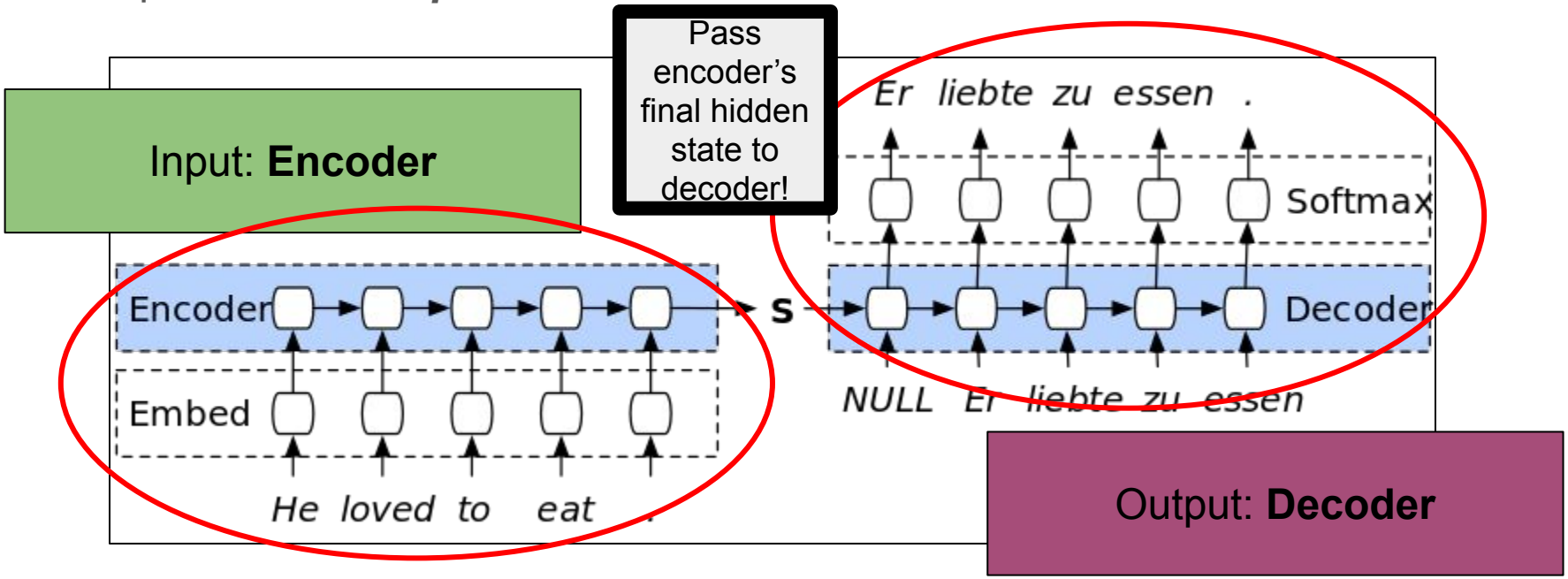

Image source: https://www.nbshare.io/notebook/313339236/English-to-German-Translation-using-Seq2Seq-Models-In-PyTorch/

Text Sequence-to-Sequence Examples

Examples:

- Neural Machine Translation: **Language-1-Sent. → Language-2-Sent.**
- Text Summarization: **Paragraph/Document → Short summary**
- Code Generation: **Problem Statement → Code**
- Reading Comprehension based Question Answering: **Reading comprehension paragraph + Question → Answer**

Image source: https://www.nbshare.io/notebook/313339236/English-to-German-Translation-using-Seq2Seq-Models-In-PyTorch/

Can we modify the encoder to suit different tasks?

Input: **Encoder**

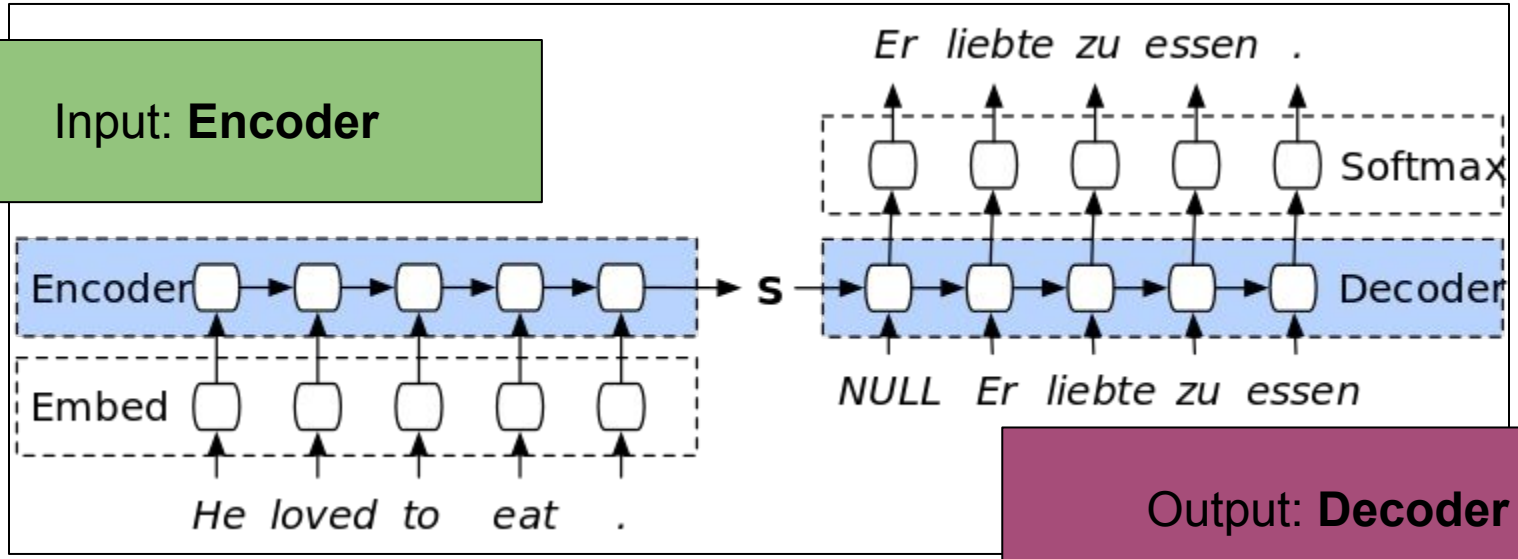

Output: **Decoder**

Image source: https://www.nbshare.io/notebook/313339236/English-to-German-Translation-using-Seq2Seq-Models-In-PyTorch/

Image-to-Sequence: Image Captioning

Task: Given an image, ***caption it***.

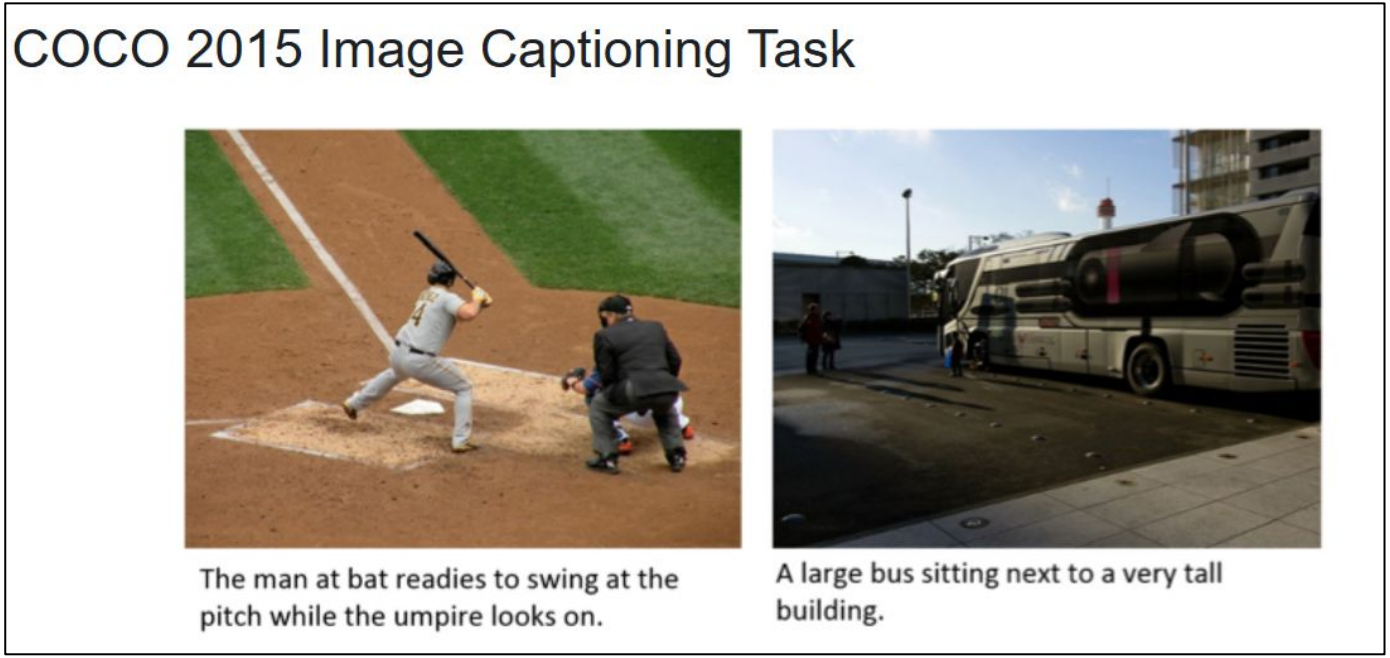

Image source: https://cocodataset.org/#captions-2015

Video-to-Sequence: Video Captioning

Task: Given a video, ***caption it***.

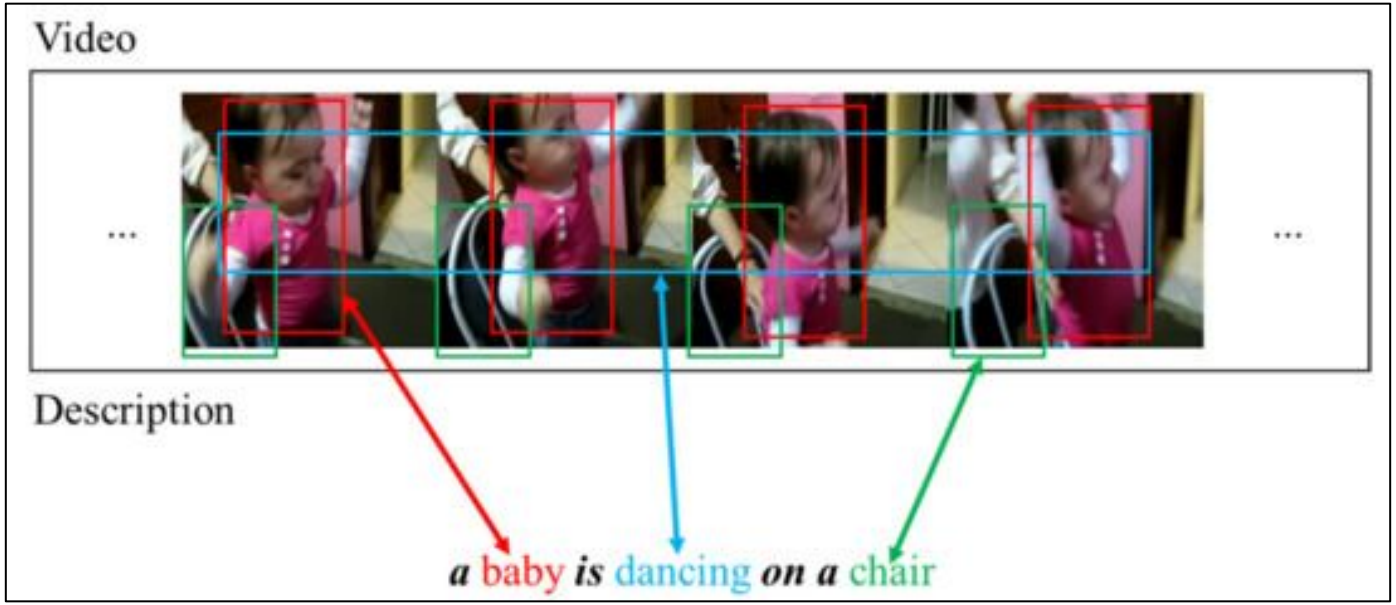

Image source: https://www.mdpi.com/2071-1050/13/4/2250

Image-to-Sequence: Image Captioning

Task: Given an image, ***caption it***.

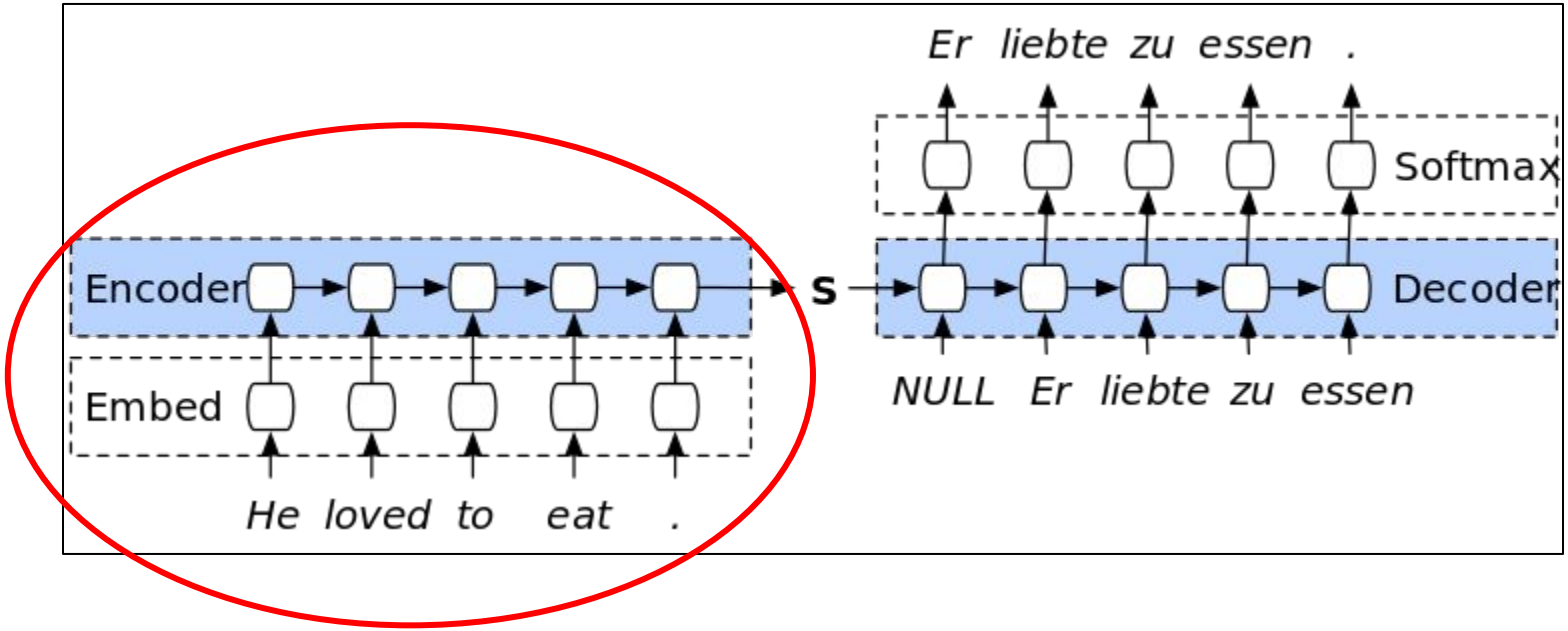

Image-to-Sequence: Image Captioning

Task: Given an image, ***caption it***.

Replace with a “CNN encoder”

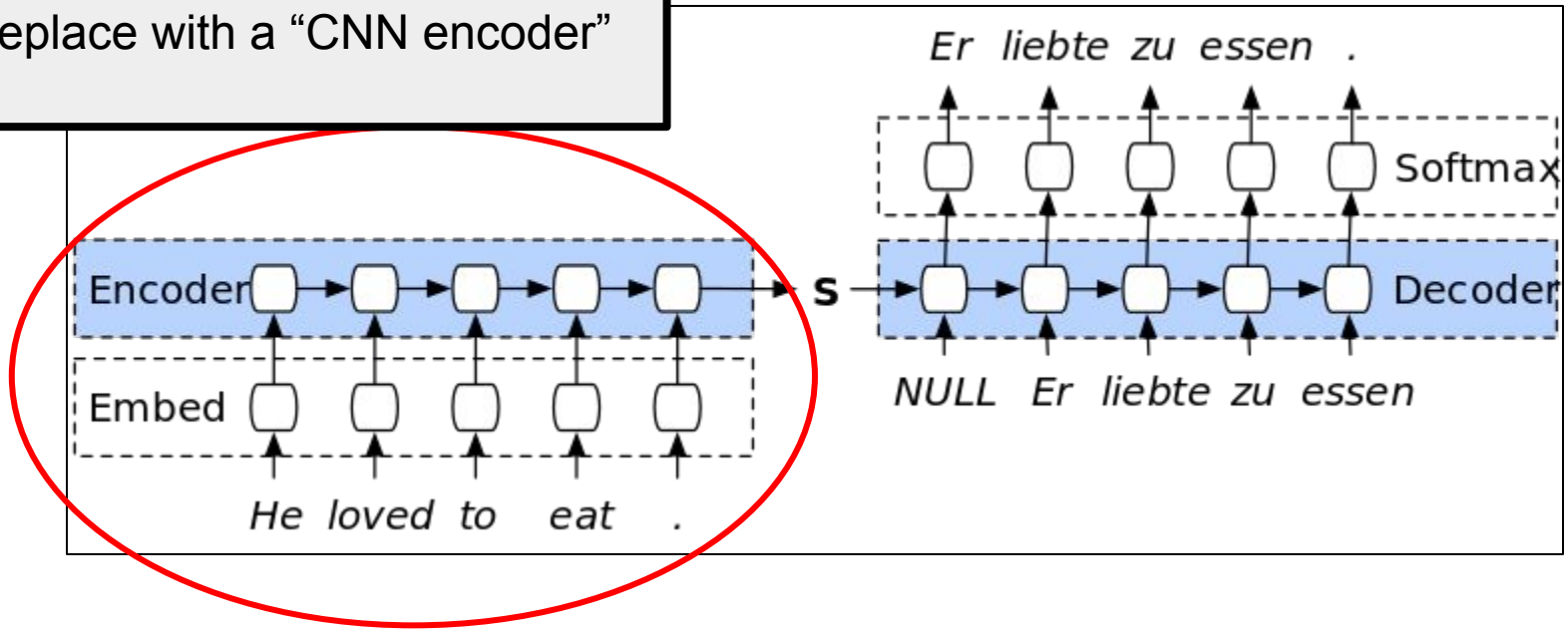

Image-to-Sequence: Image Captioning

Task: Given an image, ***caption it***.

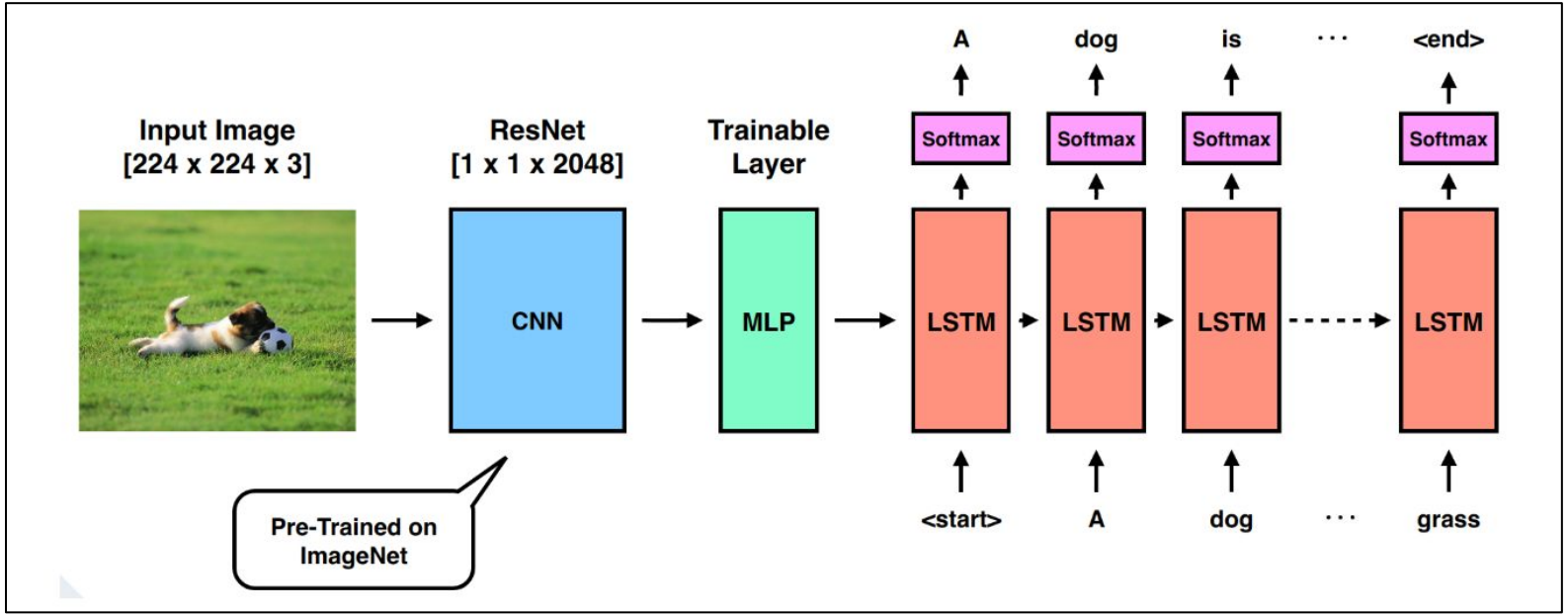

Image source: https://www.inovex.de/de/blog/end-to-end-image-captioning/

Image-to-Sequence: Image Captioning

Task: Given an image, ***caption it***.

Use the image's "embedding" as the encoder's output, and feed that as the initial hidden state of the decoder

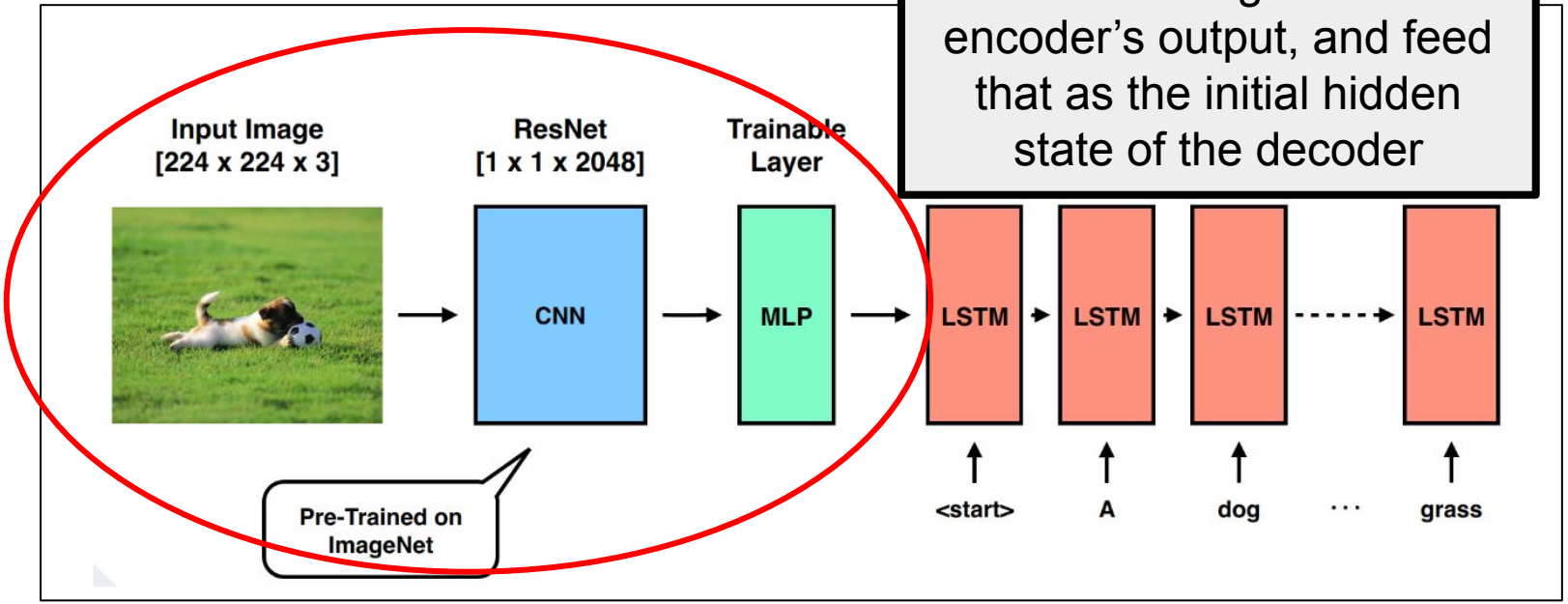

Image source: https://www.inovex.de/de/blog/end-to-end-image-captioning/

Image-to-Sequence: Image Captioning

Task: Given an image, ***caption it***.

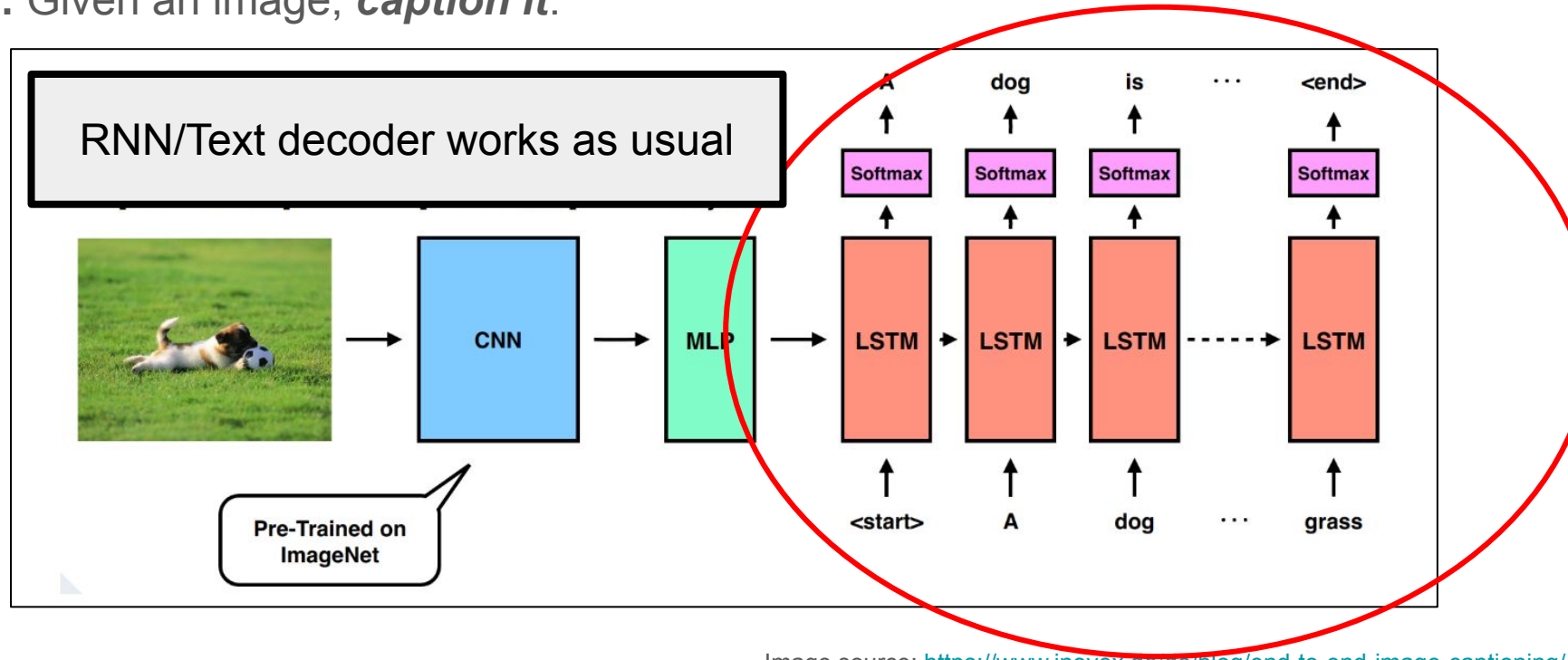

Image source: https://www.inovex.de/de/blog/end-to-end-image-captioning/

Image + Text Sequence-to-Sequence: Visual QA

Task: Given an image and a question about it, ***answer it*** via classification / text generation.

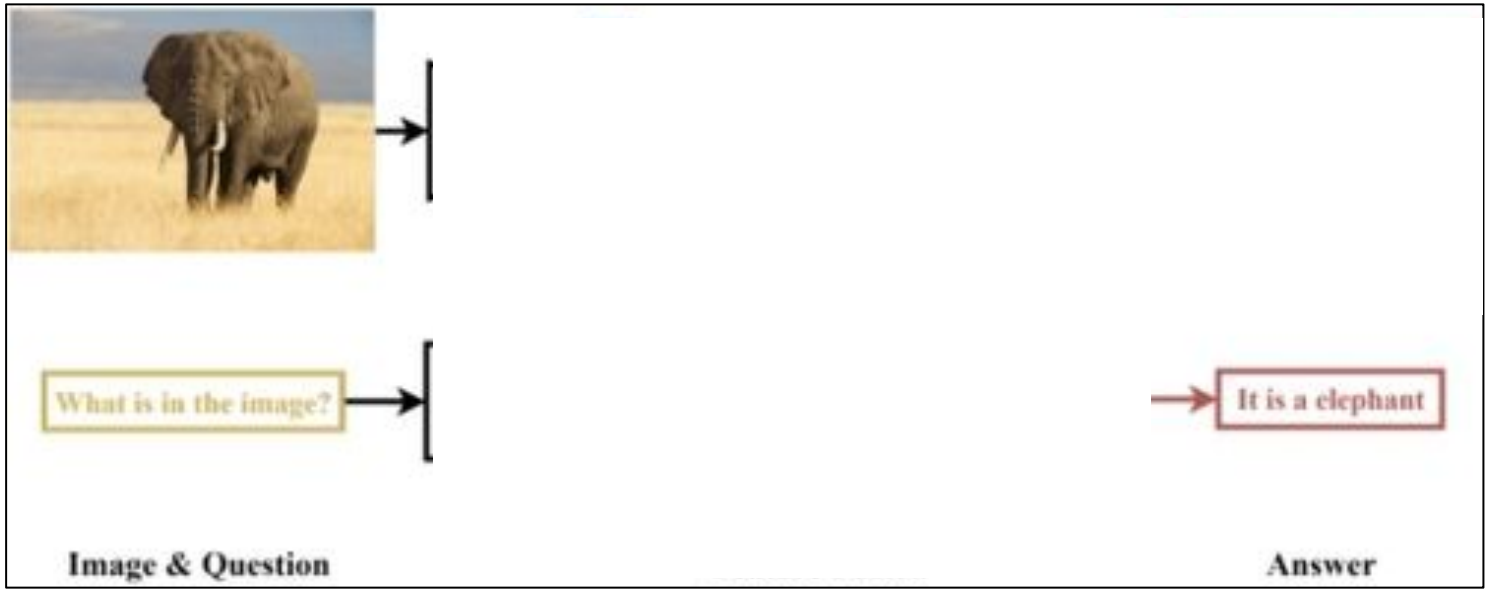

Image source: https://dl.acm.org/doi/full/10.1145/3728635

Image + Text Sequence-to-Sequence: Visual QA

Task: Given an image and a question about it, ***answer it*** via classification / text generation.

Replace with a “CNN encoder” **and** a “text RNN encoder” and combine the embeddings!

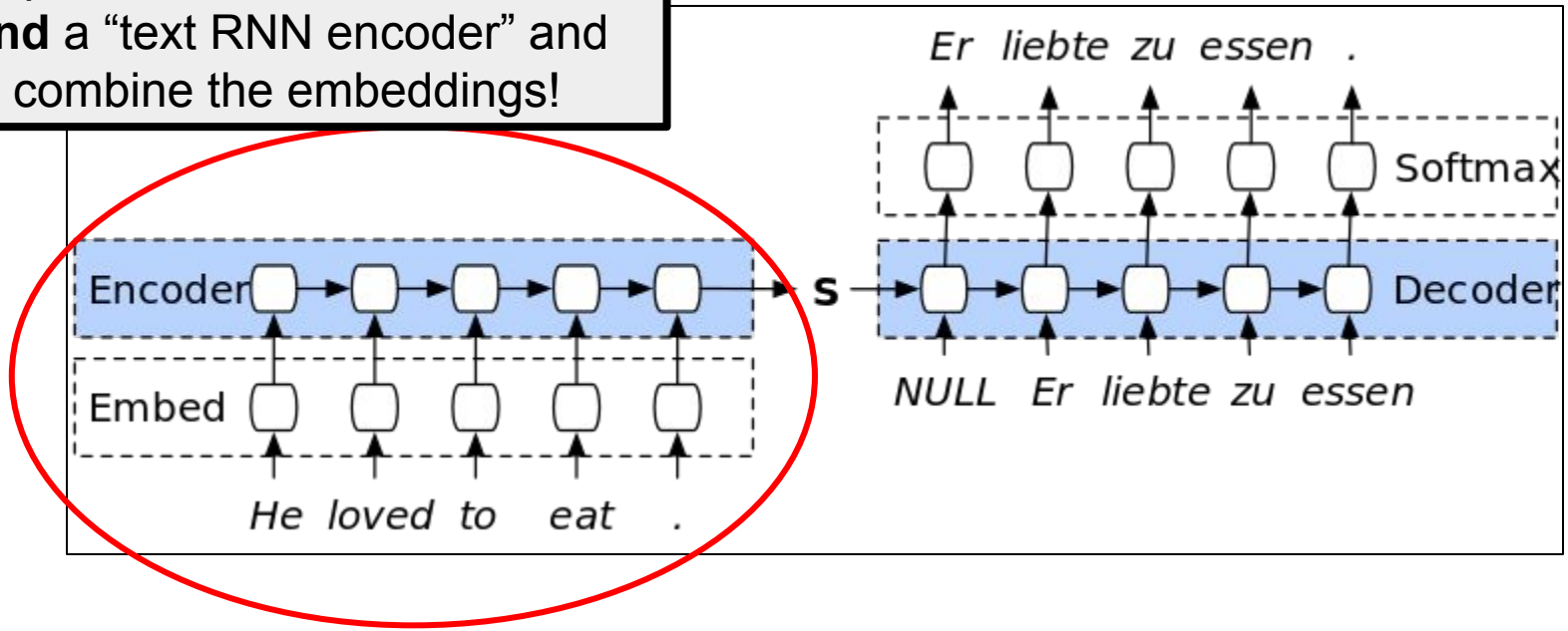

Image + Text Sequence-to-Sequence: Visual QA

Task: Given an image and a question about it, ***answer it*** via classification / text generation.

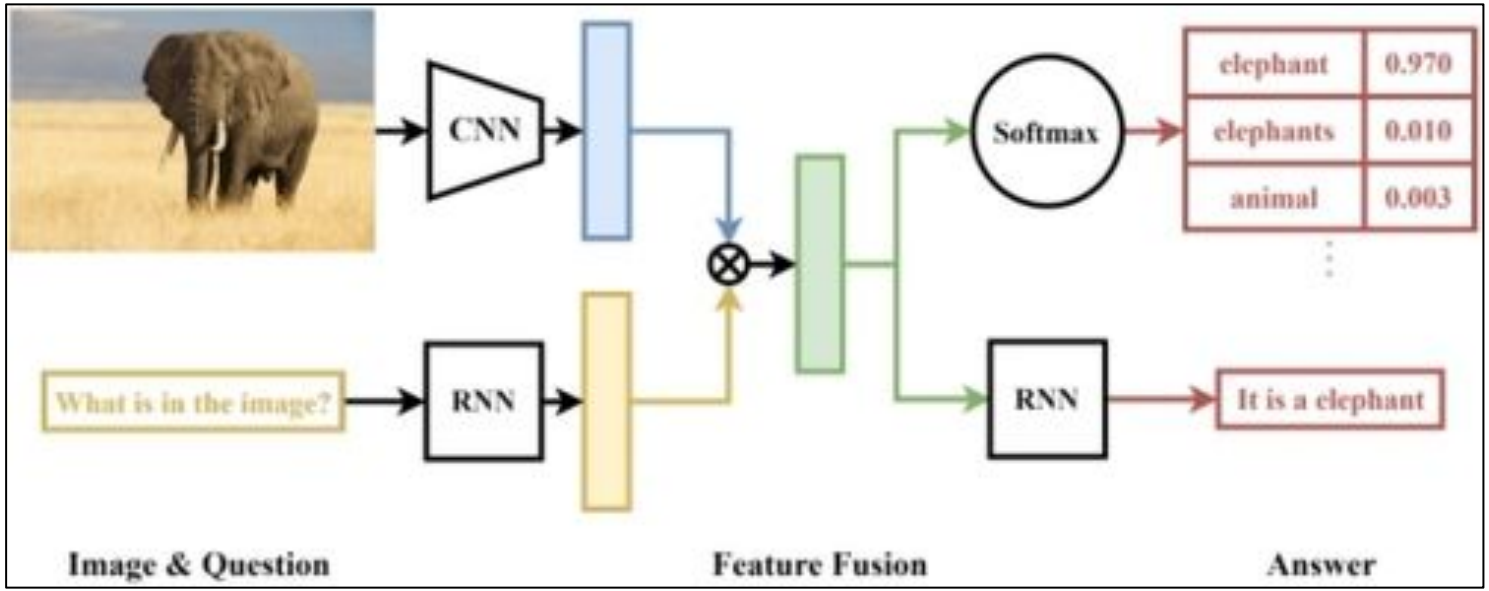

Image source: https://dl.acm.org/doi/full/10.1145/3728635

Image + Text Sequence-to-Sequence: Visual QA

Task: Given an image and a question about it, ***answe***
generation.

Use the image's CNN embedding, and the text's RNN output as the encoder's output, and feed that as the initial hidden state of the decoder

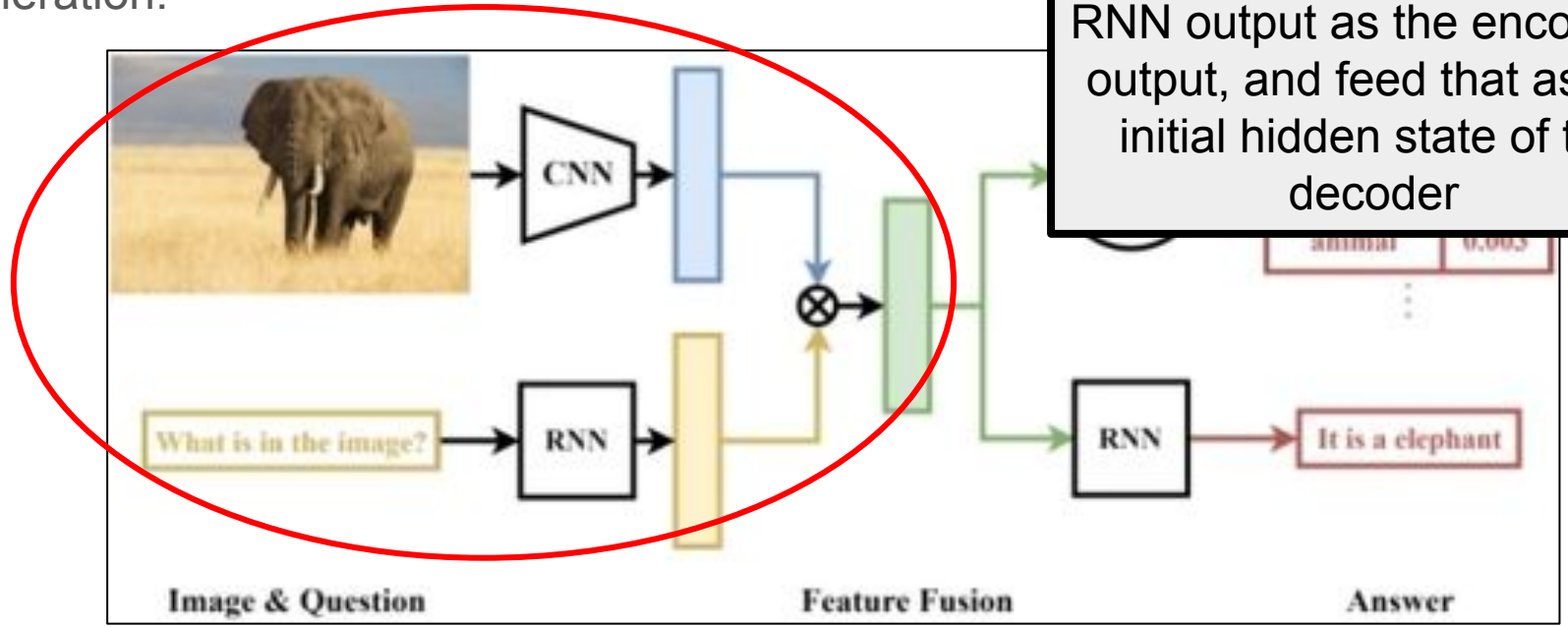

Image source: https://dl.acm.org/doi/full/10.1145/3728635

Image + Text Sequence-to-Sequence: Visual QA

Task: Given an image and a question about it, ***answer it*** via classification / text generation.

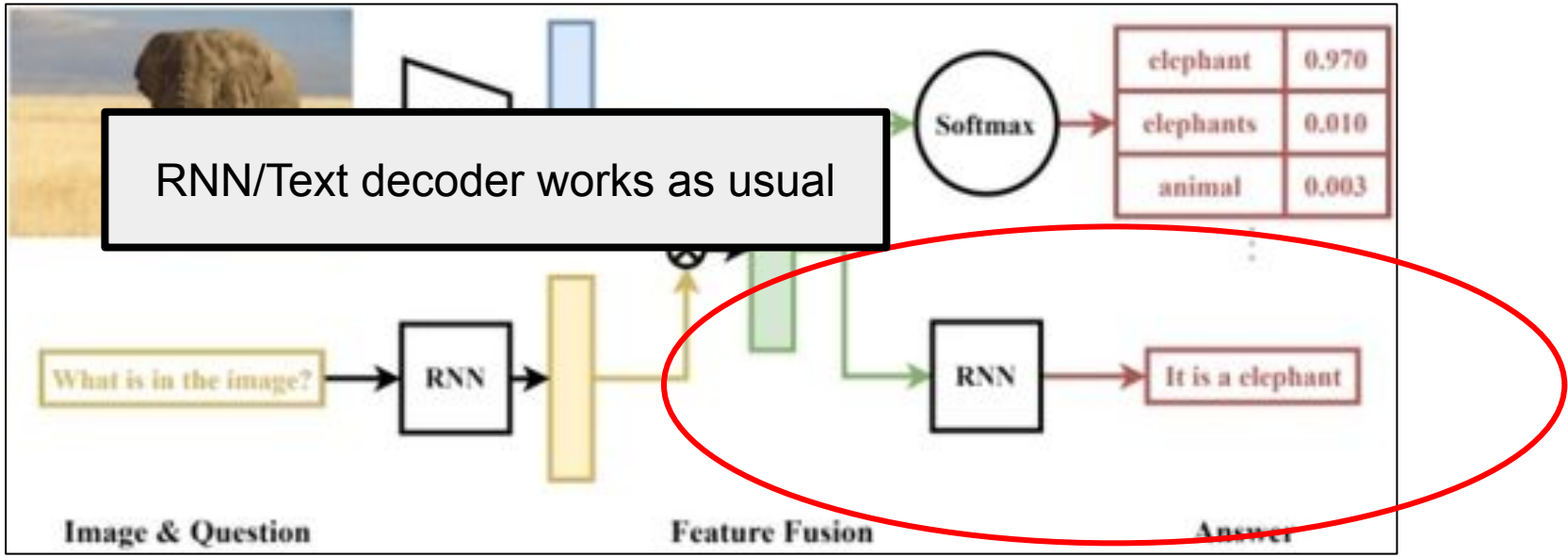

Image source: https://dl.acm.org/doi/full/10.1145/3728635

Video-to-Text-Sequence: Summarize a video

Task: Given a video, ***caption it***.

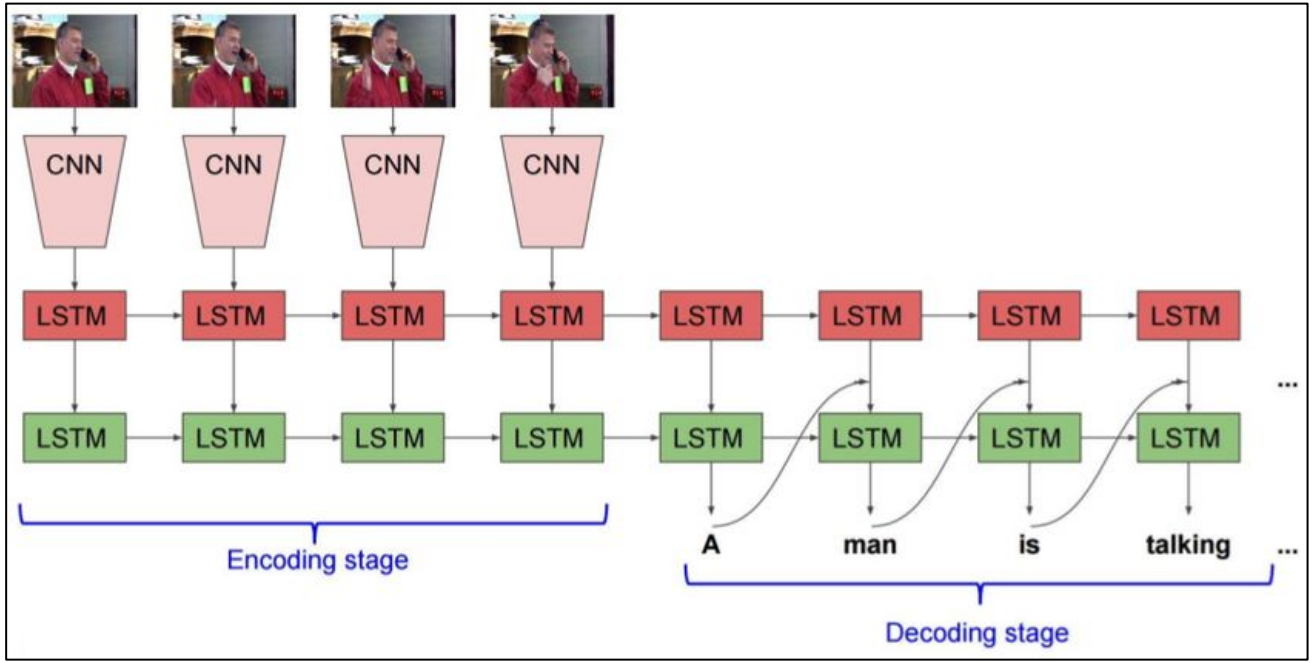

Image source:
https://www.linkedin.com/pulse/video-text-conversion-captioning-sai-likhith-panuganti-dmomc

Video-to-Text-Sequence: Summarize a video

Task: Given a video, ***caption it***.

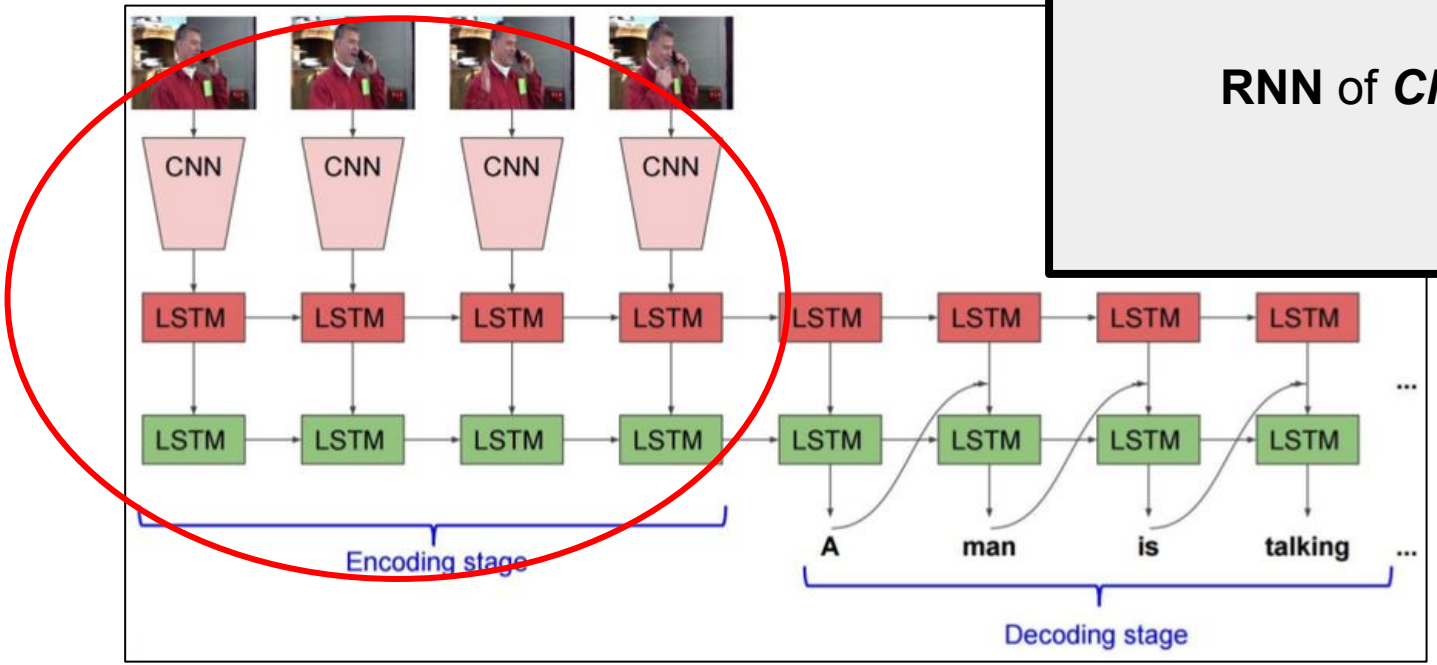

RNN of ***CNNs***!

Image source:
https://www.linkedin.com/pulse/video-text-conversion-captioning-sai-likhith-panuganti-dmomc

Video-to-Text-Sequence: Summarize a video

Task: Given a video, ***caption it***.

RNN of ***CNNs***!
Process the frames of the video in sequence using a CNN, and use those embeddings in an RNN → each frame is now a token!

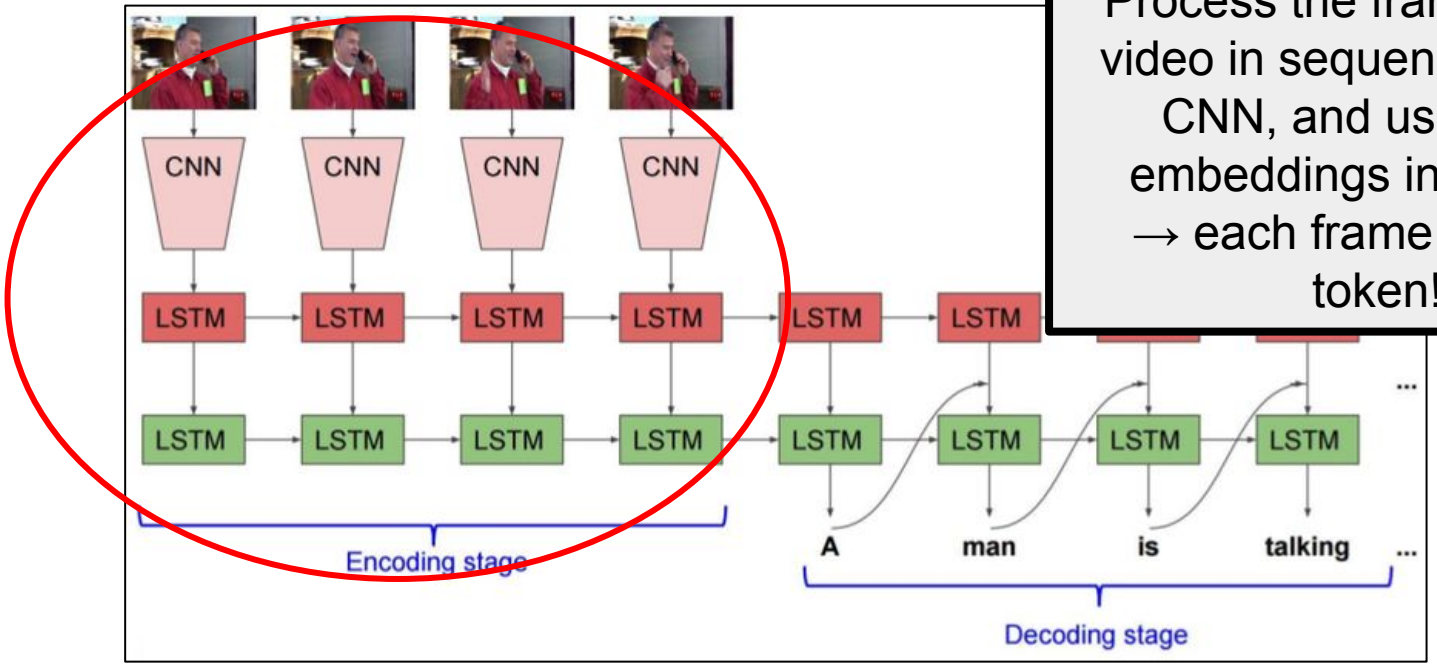

Image source:
https://www.linkedin.com/pulse/video-text-conversion-captioning-sai-likhith-panuganti-dmomc

Video-to-Text-Sequence: Summarize a video

Task: Given a video, ***caption it***.

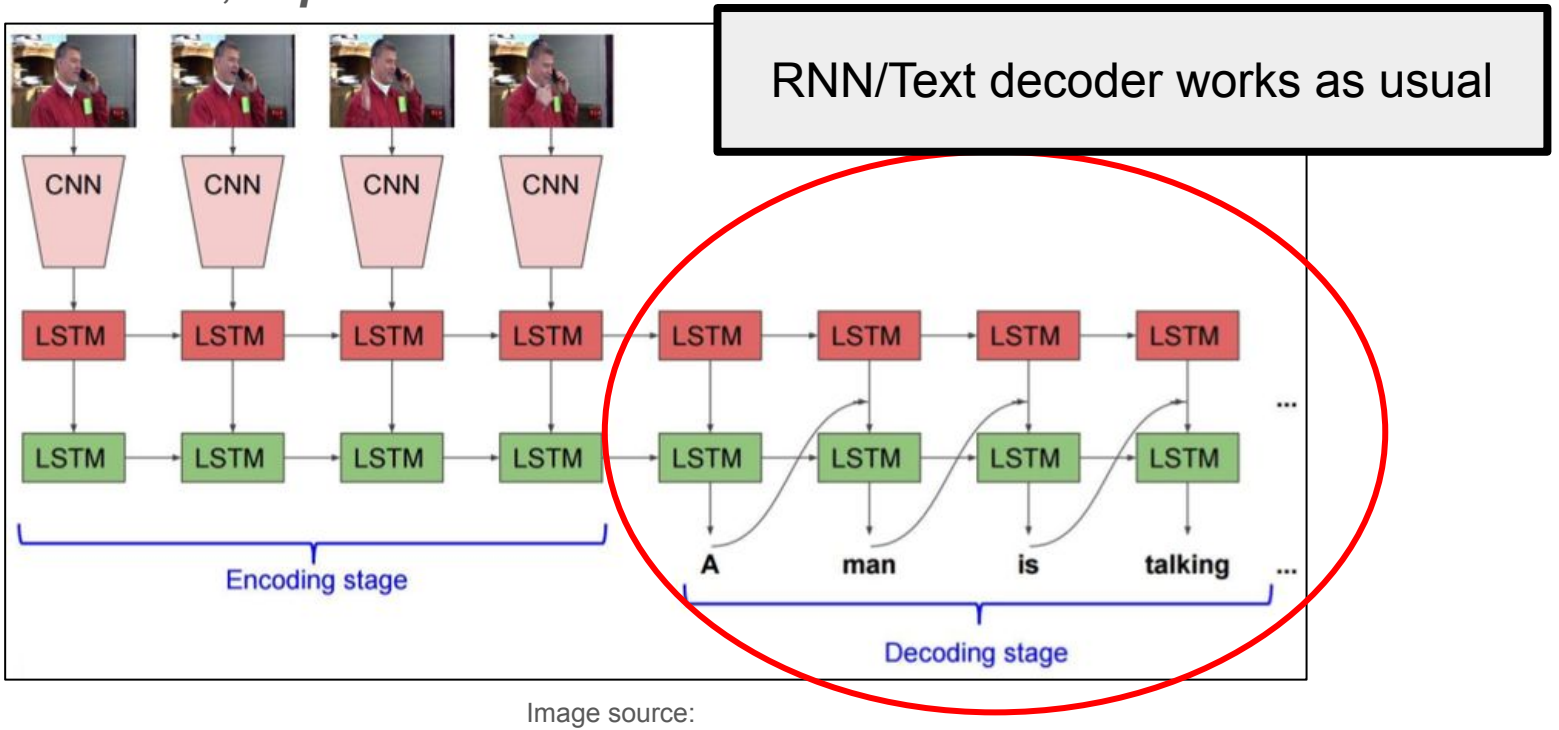

Image source:
https://www.linkedin.com/pulse/video-text-conversion-captioning-sai-likhith-panuganti-dmomc

.. and more!

We can alter the encoder embeddings to suit our task!

- Video + Text Sequence-to-Sequence: Visual QA on a video
- Video + Image + Text Sequence-to-Sequence: Visual QA on a video using an image
- Audio-to-Sequence: Transcribing an audio
- Audio + Text Sequence-to-Sequence: Listening Comprehension based QA

Also, text-to-image, text-to-video, etc., by modifying the decoder!