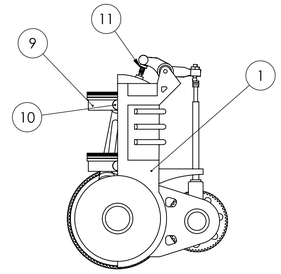

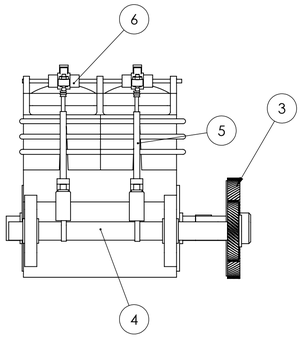

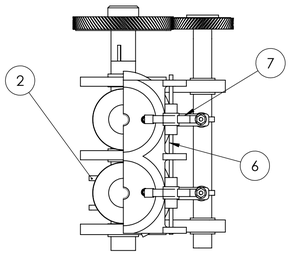

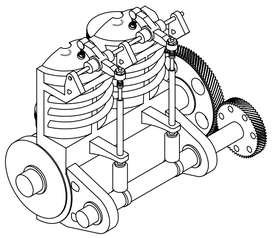

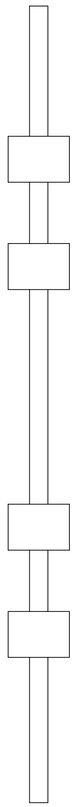

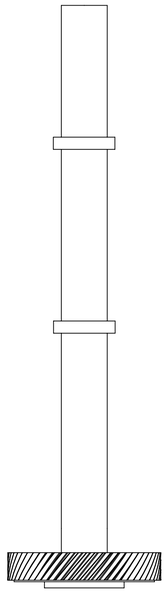

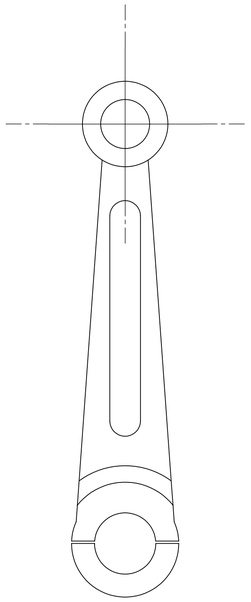

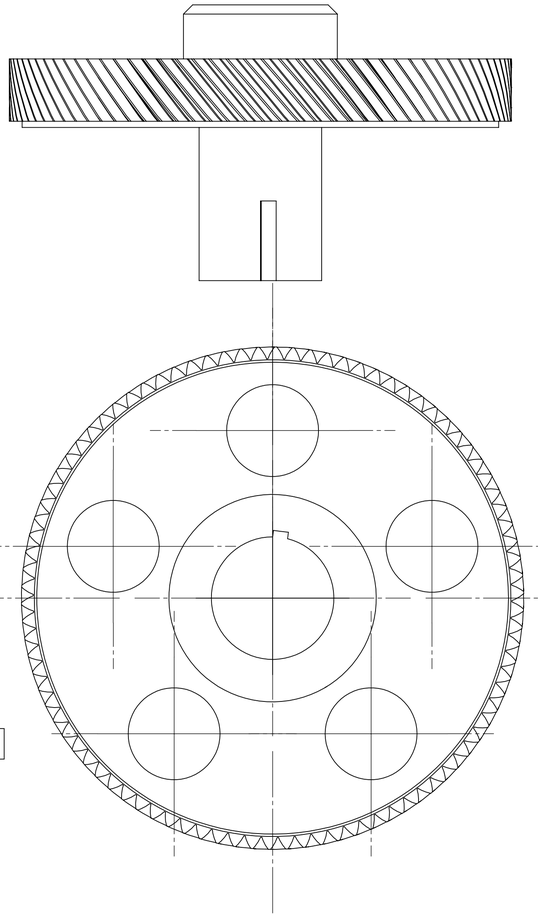

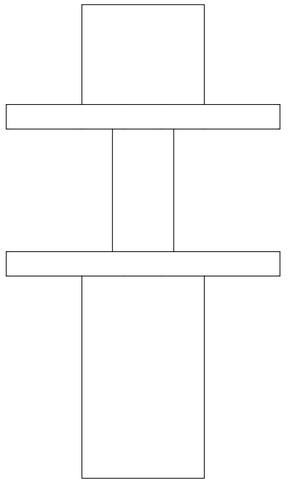

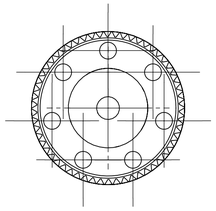

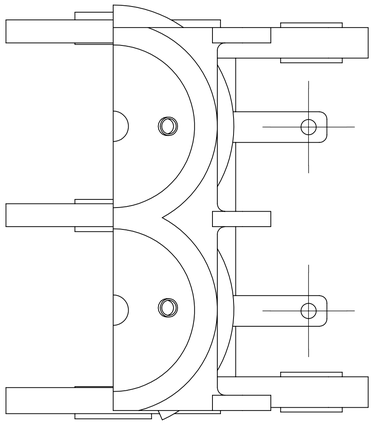

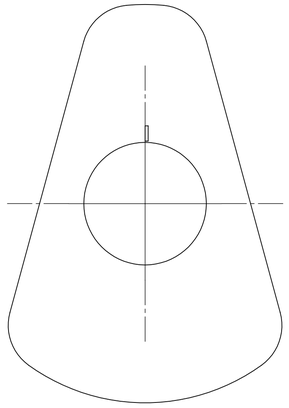

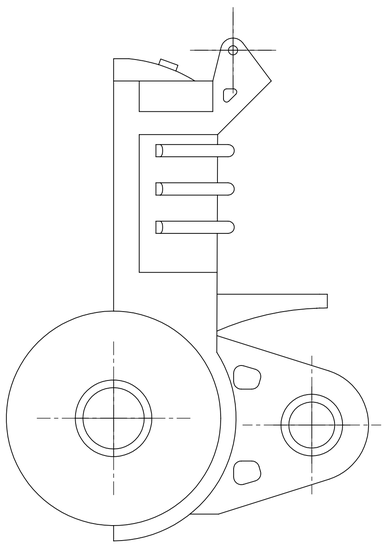

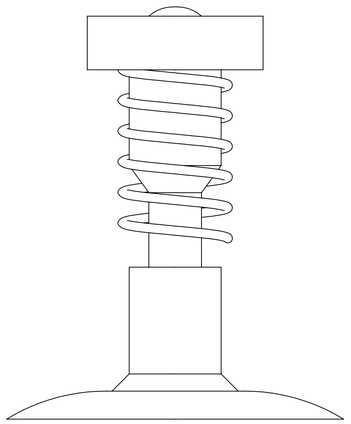

ITEM NO.	PART NUMBER	DESCRIPTION	QTY.
1	Engine Block		1
2	Crankshaft		2
3	Crankshaft Sprocket		1
4	Camshaft with Sprocket		1
5	Pushrod		2
6	Arbor		1
7	Rocker Arm		2
8	Connecting Rod		2
9	Piston		2
10	Pin		2
11	Valve		2

UNLESS OTHERWISE SPECIFIED:
DIMENSIONS ARE IN MILLIMETERS
SURFACE FINISH:
TOLERANCES:
LINEAR:
ANGULAR:

FINISH:

DEBURR AND BREAK SHARP EDGES

DO NOT SCALE DRAWING

REVISION

	NAME	SIGNATURE	DATE
DRAWN			
CHK'D			
APPV'D			
MFG			
Q.A			

MATERIAL:

WEIGHT:

TITLE:

DWG NO. 2D Drawing

A1

SCALE:2:1

SHEET 1 OF 1