ECE 745

ASIC Verification

Project 1 Assignment – I2CMB Interface

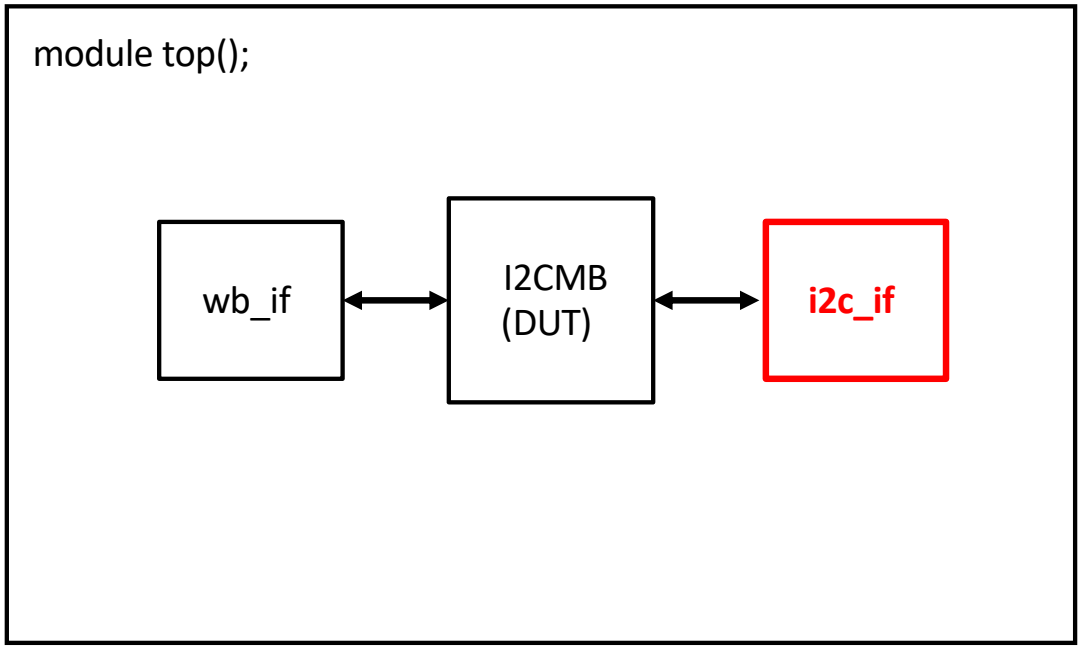

Provided in Assignment

- Directory structure and files from Lab 1

Project Instructions - Setup

- In the project_benches directory:
  - Copy your lab_1 project directory to proj_1 directory
- In the verification_ip/interface_packages directory:
  - Make an i2c_pkg directory
  - Create a src directory under i2c_pkg
  - Create an i2c_if.sv file under the i2c_pkg/src directory
  - Create a Makefile under i2c_pkg that compiles the i2c_if.sv
    - Similar to Makefile under wb_pkg directory
- In the project_benches/proj_1 directory
  - Include the i2c_pkg/Makefile in the sim/Makefile
  - Add the compile target for i2c_if.sv to the sim/Makefile as a dependency to the comp_bench target
- Run 'make debug' to compile and run the bench
  - Simulation should run as in lab_1

Project Instructions – i2c_if Creation

- Study the I2C specification
- Implement the following tasks within the i2c_if interface that models an I2C Slave which
  - Waits for and captures transfer start
    - task wait_for_i2c_transfer (output i2c_op_t op, output bit [I2C_DATA_WIDTH-1:0] write_data []);
  - Provides data for read operation
    - task provide_read_data (input bit [I2C_DATA_WIDTH-1:0] read_data [], output bit transfer_complete);
  - Returns data observed
    - task monitor (output bit [I2C_ADDR_WIDTH-1:0] addr, output i2c_op_t op, output bit [I2C_DATA_WIDTH-1:0] data []);

Project Instructions – i2c_if Instantiation

- Place an instance of i2c_if within top.sv with an instance name of i2c_bus
- Connect i2c_bus to the DUT
- Create an initial block named monitor_i2c_bus within top.sv that
  - Calls i2c_bus.monitor task
  - Displays the observed values
    - I2C writes should start with the message: “I2C_BUS WRITE Transfer:”
    - I2C reads should start with the message: “I2C_BUS READ Transfer:”

Project Instructions – i2c_if Verification

- Write 32 incrementing values, from 0 to 31, to the i2c_bus
- Read 32 values from the i2c_bus
  - Return incrementing data from 100 to 131
- Alternate writes and reads for 64 transfers
  - Increment write data from 64 to 127
  - Decrement read data from 63 to 0
- Verify i2c_bus operation using messages in transcript from i2c_bus.monitor task

- Note:
  - All operations done through DUT via wb_bus
  - Project submission will be run by TA's to verify operation of these steps
    - Do not clutter up transcript with your debug messages

Clarity:
I2C source
Transcript

Project Submission

- Submit on Moodle:
  - Part 1 submit by 11:59pm on Friday, February 13th
  - Part 1 includes:
    - Wait_for_i2c_transfer task capable of write operations
  - Part 2 submit by 11:59pm on Friday, February 27th
    - Part 2 submission includes content from part 1, which can be modified
    - Wait_for_i2c_transfer task capable of write and read operations
    - Provide_read_data task
    - Monitor task
- Single tar file
  - Containing: ece745_projects directory and all sub-directories
  - Named: <unityId>_p1.tar
  - Execute 'make clean' in sim directory before creating tar file