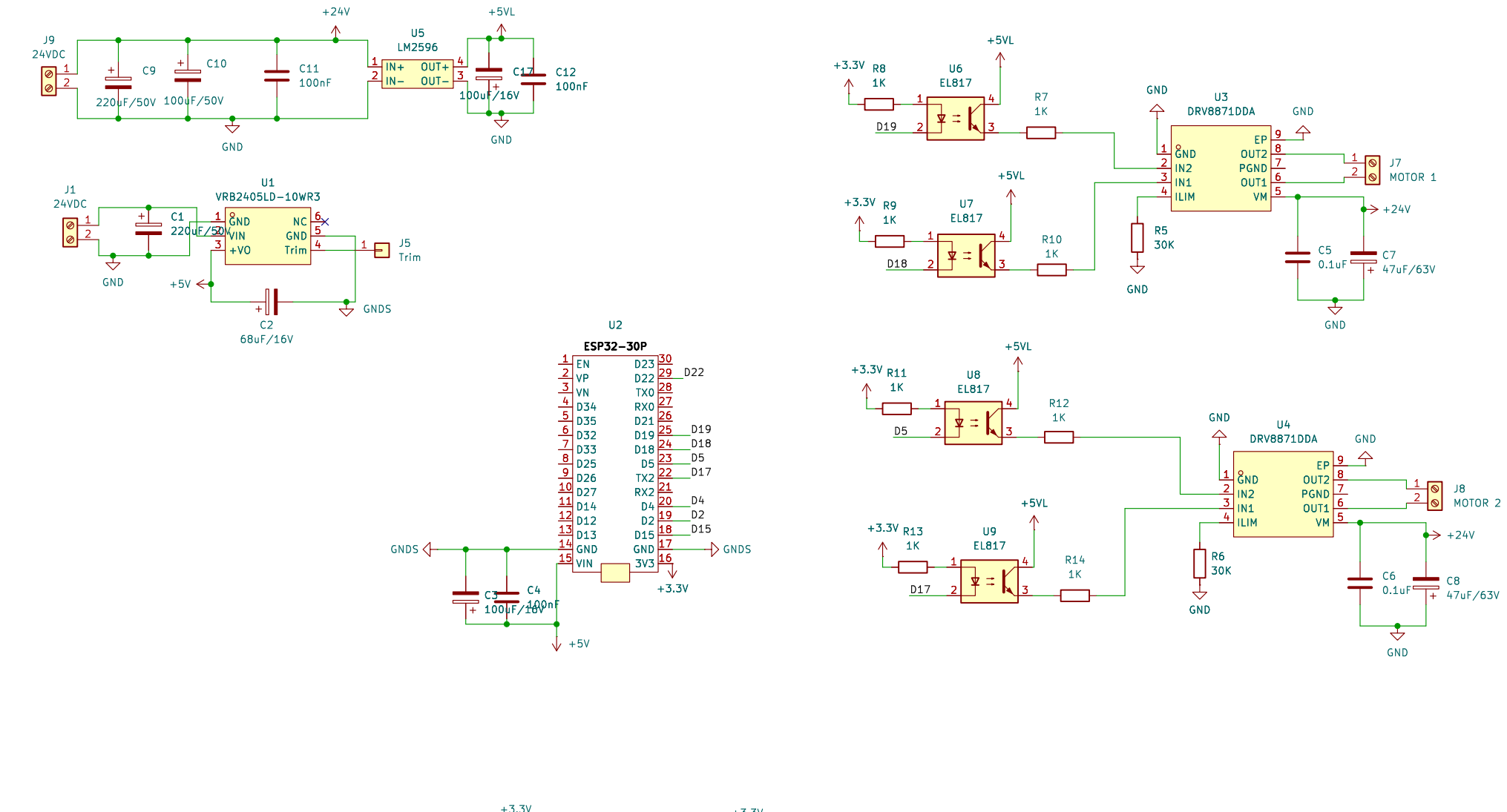

MOTOR DRIVER
4 INPUT
Byte Electronics.

Sheet: /
File: ESP32 Motor Driver V1.kicad_sch

Title: ESP32 4CH Relay.

Size: A4	Date: 2026-01-24	**Rev: 5**
KiCad E.D.A. 8.0.7		Id: 1/1