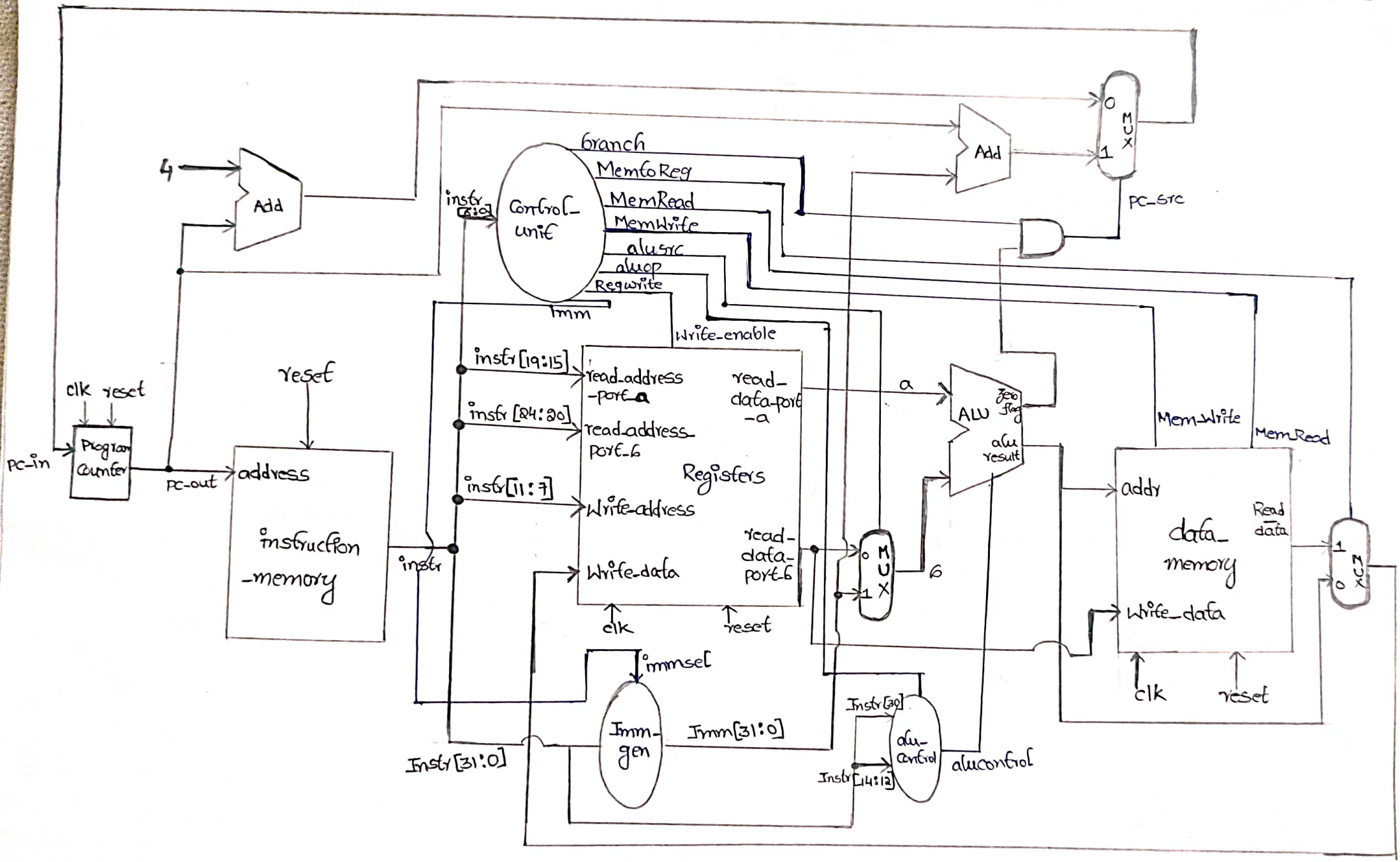

Non-pipelined RISC-V Processor