# IN: INSTRUMENTATION ENGINEERING

Sai Sreevallabh - ee25btech11031

## Q.1-Q.20 Carry one mark each

1) If $z = x + jy$, where $x$ and $y$ are real, the value of $|e^{jz}|$ is

(GATE IN 2009)

a) 1 b) $e^{\sqrt{x^2+y^2}}$ c) $e^y$ d) $e^{-y}$

2) The value of $\oint \frac{sinz}{z} dz$, where the contour of integration is a simple closed curve around the origin, is

(GATE IN 2009)

a) 0 b) $2\pi j$ c) $\infty$ d) $1/(2\pi j)$

3) Let $\mathbf{P} \neq \mathbf{0}$ be a $3 \times 3$ real matrix. There exist linearly independent vectors $\mathbf{x}$ and $\mathbf{y}$ such that $\mathbf{Px} = 0$ and $\mathbf{Py} = 0$. The dimension of the range space of $\mathbf{P}$ is

(GATE IN 2009)

a) 0 b) 1 c) 2 d) 3

4) A sphere of unit radius is centered at the origin. The unit normal at a point $(x, y, z)$ on the surface of the sphere is the vector

(GATE IN 2009)

a) $(x, y, z)$ b) $\left(\frac{1}{\sqrt{3}}, \frac{1}{\sqrt{3}}, \frac{1}{\sqrt{3}}\right)$ c) $\left(\frac{x}{\sqrt{3}}, \frac{y}{\sqrt{3}}, \frac{z}{\sqrt{3}}\right)$ d) $\left(\frac{x}{\sqrt{2}}, \frac{y}{\sqrt{2}}, \frac{z}{\sqrt{2}}\right)$

5) An LVDT is supplied with a sinusoidal voltage of amplitude $5V$ and frequency 1kH. The output is connected to an ac voltmeter. The reading of the voltmeter is $1V$ for a displacement of 1mm from the null position. When the displacement is 1mm in the opposite direction from the null position, the reading of the voltmeter is

(GATE IN 2009)

a) -1V b) $-0.2$V c) 1V d) 5V

6) The circuit shown in $Fig.$ 1 is

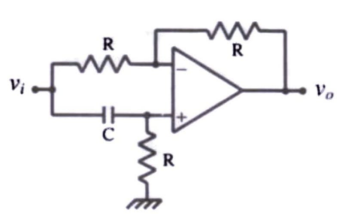


Fig. 1. Circuit Diagram

. (GATE IN 2009)

a) an all-pass filter
b) a bandpass filter
c) a highpass filter
d) a lowpass filter

7) The diodes shown in the circuit ($Fig.$ 2) are ideal. A voltage of $0V$ represents logic 0 and $+5V$ represents logic 1. The logic function Z realied by the circuit for logic inputs X and Y is (GATE IN 2009)

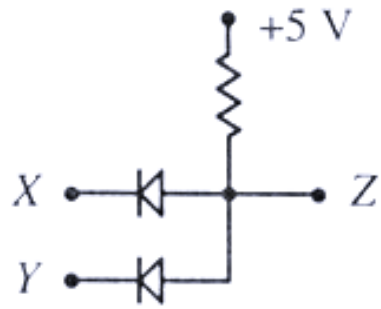


Fig. 2. Circuit Diagram

a) $Z = X + Y$
b) $Z = XY$
c) $Z = \overline{X + Y}$
d) $Z = \overline{XY}$

8) The minimal sum-of-products expression for the logic function $f$ represented by the given Karnaugh map (Fig. 3) is (GATE IN 2009)

| RS \ PQ | 00 | 01 | 11 | 10 |
|---|---|---|---|---|
| 00 | 0 | 1 | 0 | 0 |
| 01 | 0 | 1 | 1 | 1 |
| 11 | 1 | 1 | 1 | 0 |
| 10 | 0 | 0 | 1 | 0 |

Fig. 3. Karnaugh map

a) $QS + P\overline{R}S + PQR + \overline{P}RS + \overline{P}Q\overline{R}$
b) $\overline{QS} + \overline{P}R\overline{S} + \bar{P}\bar{Q}R + \overline{PR}S + P\overline{Q}R$
c) $\overline{P}R\overline{S} + \bar{P}\bar{Q}\bar{R} + P\bar{R}\bar{S} + P\overline{Q}R$
d) $P\overline{R}S + PQR + \overline{P}RS + \overline{P}Q\overline{R}$

9) In Fig. 4, the initial state of $Q$ is 0. The output is observed after the application of each clock pulse. The output sequence at $Q$ is

(GATE IN 2009)

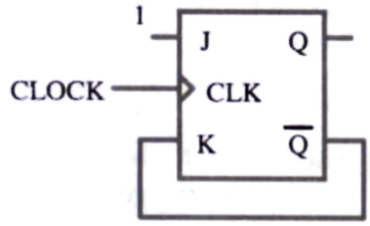


Fig. 4. For Question-9

a) 0000...
b) 1010...
c) 1111...
d) 1000...

10) The binary representation of the decimal number 1.375 is

(GATE IN 2009)

a) 1.111
b) 1.010
c) 1.011
d) 1.001

11) Consider a system consisting of microprocessor, memory and peripheral devices connected by a common bus. During DMA data transfer, the microprocessor

(GATE IN 2009)

a) only reads from the bus
b) only writes to the bus
c) both reads from and writes to the bus
d) neither reads from nor writes to the bus

12) The fundamental period of $x(t) = 2\sin 2\pi t + 3\sin 3\pi t$, with $t$ expressed in seconds, is

(GATE IN 2009)

a) 1s
b) 0.67s
c) 2s
d) 3s

13) A linear time-invariant causal system has a frequency response given in polar form as $\frac{1}{\sqrt{1+\omega^2}}\angle -tan^{-1}\omega$. For input $x(t) = \sin t$, the output is

(GATE IN 2009)

a) $\frac{1}{\sqrt{2}}\cos t$
b) $\frac{1}{\sqrt{2}}\cos(t - \frac{\pi}{4})$
c) $\frac{1}{\sqrt{2}}\sin t$
d) $\frac{1}{\sqrt{2}}\sin(t - \frac{\pi}{4})$

14) A 50% duty cycle square wave with zero mean is used as a baseband signal in an ideal frequency modulator with a sinusoidal carrier of frequency $\omega_c$. The modulated signal is given as an input to an ideal phase demodulator (a circuit that produces an output proportional to the difference in phase of the modulated signal from that of the carrier). The output of the circuit is

(GATE IN 2009)

a) a square wave
b) a train of impulses with alternating signs

c) a triangular wave
d) a sinusoidal wave

15) Fig. 5 shows a periodic waveform to be displayed on a CRO. A trigger setting which ensures a stationary display is

(GATE IN 2009)

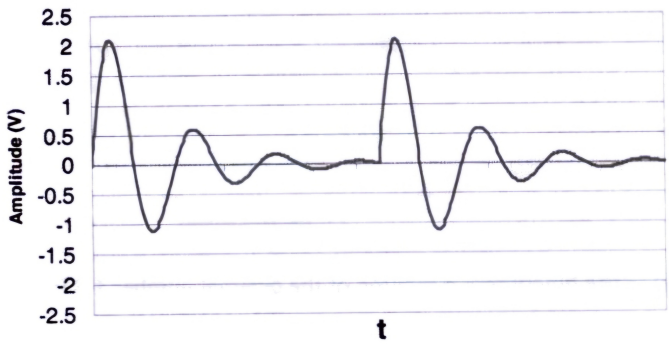


Fig. 5. Waveform

a) level: 0.2V, slope: −ve
b) level: 0.5V, slope: −ve
c) level: −0.2V, slope: +ve
d) level: 1.8V, slope: −ve

16) The input impedance of a CRO is equivalent to a 1MΩ resistance in parallel with a 45pF capacitance. It is used with a compensated 10-to-1 attenuation probe. The effective input capacitance at the probe tip is

(GATE IN 2009)

a) 4.5pF
b) 5pF
c) 45pF
d) 450pF

17) A galvanometer with internal resistance 100Ω and full-scale current $1mA$ is used to realize a dc voltmeter with a full scale range of 1V. The full scale range of this voltmeter can be extended to $10V$ by connecting an external resistance of value

(GATE IN 2009)

a) 9kΩ
b) 9.9kΩ
c) 10kΩ
d) 11kΩ

18) A plant with a transfer function $\frac{2}{s(s+3)}$ is controlled by a PI controller with $K_p = 1$ and $K_i \geq 0$ in a unity feedback configuration. The lowest value of $K_i$ that ensures zero steady state error for a step change in the reference input is

(GATE IN 2009)

a) 0
b) 1/3
c) 1/2
d) 1

19) A mass spectrometer is used to resolve peaks corresponding to $CO^+$ and $N_2{}^+$. The atomic masses are $^{12}C = 12.0000$, $^{16}O = 15.9949$ and $^{14}N = 14.0031 amu$. The resolving power of the mass spectrometer should be atleast

(GATE IN 2009)

a) 250
b) 350
c) 2500
d) 3500

20) Assuming complete dissociation, the pH of a 1mM solution of $H_2SO_4$ is closest to

(GATE IN 2009)

a) 3
b) 2.7
c) 2.4
d) 2.1

**Q.**21 TO **Q.**60 CARRY TWO MARKS EACH

21) The eigenvalues of a $(2\times 2)$ matrix $\mathbf{X}$ are $-2$ and $-3$. The eigenvalues of the matrix $(\mathbf{X}+\mathbf{I})^{-1}(\mathbf{X}+5\mathbf{I})$ are

(GATE IN 2009)

a) $-3, -4$
b) $-1, -2$
c) $-1, -3$
d) $-2, -4$

22) The matrix $\mathbf{P}\begin{pmatrix} 0 & 0 & 0 \\ 1 & 0 & 0 \\ 0 & 1 & 0 \end{pmatrix}$ rotates a vector about the axis $\begin{pmatrix} 1 \\ 1 \\ 1 \end{pmatrix}$ by an angle of

(GATE IN 2009)

a) $30°$
b) $60°$
c) $90°$
d) $120°$

23) A screening test is carried out to detect a certain disease. It is found that 12% of the positive reports and 15% of the negative reports are incorrect. Assuming that the probability of a person getting a positive report is 0.01, the probability that a person tested gets an incorrect report is

(GATE IN 2009)

a) 0.0027
b) 0.0173
c) 0.1497
d) 0.2100

24) One of the roots of the equation $x^3 = j$, where $j$ is the positive square root of $-1$, is

(GATE IN 2009)

a) $j$ b) $\frac{\sqrt{3}}{2} + j\frac{1}{2}$ c) $\frac{\sqrt{3}}{2} - j\frac{1}{2}$ d) $-\frac{\sqrt{3}}{2} - j\frac{1}{2}$

25) The differential equation $\frac{dx}{dt} = \frac{4-x}{\tau}$ with $x(0) = 0$, and the constant $\tau > 0$, is to be numerically integrated using the forward Euler method with a constant integration time step $T$. The maximum value of $T$ such that the numerical solution of $x$ converges is (GATE IN 2009)

a) $\tau/4$ b) $\tau/2$ c) $\tau$ d) $2\tau$

26) A quantity $x$ is calculated by using the formula
$x = (p - q)/r$,
The measured values are $p = 9$, $q = 6$, $r = 0.5$.
Assume that the measurement errors in $p, q$ and $r$ are independent. The absolute maximum error in the measurement of each of the three quantities is $\epsilon$. The absolute maximum error in the calculated value of $x$ is

(GATE IN 2009)

a) $\epsilon$ b) $2\epsilon$ c) $3\epsilon$ d) $16\epsilon$

27) The response of a first order measurement system to a unit step input is $1-e^{-0.5t}$, where $t$ is in seconds. A ramp of 0.1 units per second is given as the input to this system. The error in the measured value after transients have dies down is

(GATE IN 2009)

a) 0.02 units b) 0.1 units c) 0.2 units d) 1 unit

28) The source network S is connected to the load network L as shown by dashed lines (in Fig. 6. The power transferred from S to L would be maximum when $R_L$ is

(GATE IN 2009)

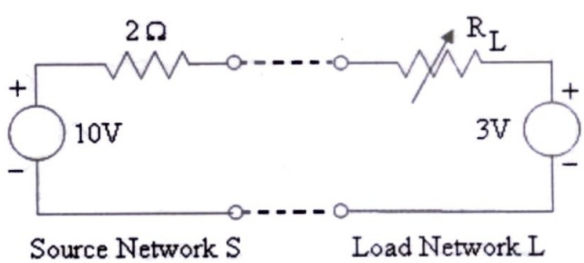


Fig. 6. Circuit Diagram

a) 0Ω b) 0.6Ω c) 0.8Ω d) 2Ω

29) A stroboscopic system is used for measuring the speed of a rotating shaft. The shaft has one target mark on it. The maximum strobe rate at which synchronism is achieved is $r_1$ flashes per minute. The next lower flash rate at which synchronism is achieved is $r_2$ flashes per minute. The speed of the shaft in rpm is:

(GATE IN 2009)

a) $\frac{r_1 r_2}{r_1 - r_2}$ b) $\frac{r_1 r_2}{r_1 + r_2}$ c) $\frac{r_2^2}{r_1 + r_2}$ d) $\frac{r_1^2}{r_1 + r_2}$

30) Fig. 7 shows the cross-sectional diagram of an orifice flow meter with an orifice radius $R$. Point 'a' is 30R upstream while points 'b' and 'c' are $0.8R$ and $30R$ downstream from the orifice respectively. The pressures at points a,b and c are $P_a$, $P_b$ and $P_c$ respectively. Then

(GATE IN 2009)

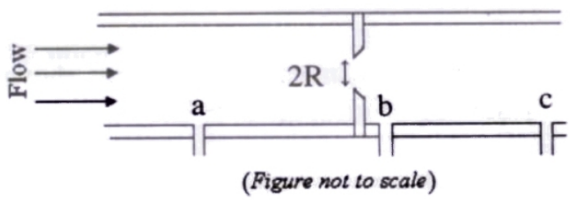


Fig. 7. Cross-sectional Diagram of an orifice flow meter

a) $P_c > P_b > P_a$
b) $P_b > P_c > P_a$
c) $P_a > P_b > P_c$
d) $P_a > P_c > P_b$

31) The values of the material constant $\beta$ for the thermistors P and Q are 4000K and 3000K, respectively. The resistance of each thermistor at 298K is 2kΩ. At 373K, the ratio of the resistance of thermistor P to that of thermistor Q will be closest to

(GATE IN 2009)

a) 1.33
b) 1.00
c) 0.75
d) 0.50

32) Four strain gauges are fixed on a cylindrical shaft to measure torque, as shown in Fig. 8

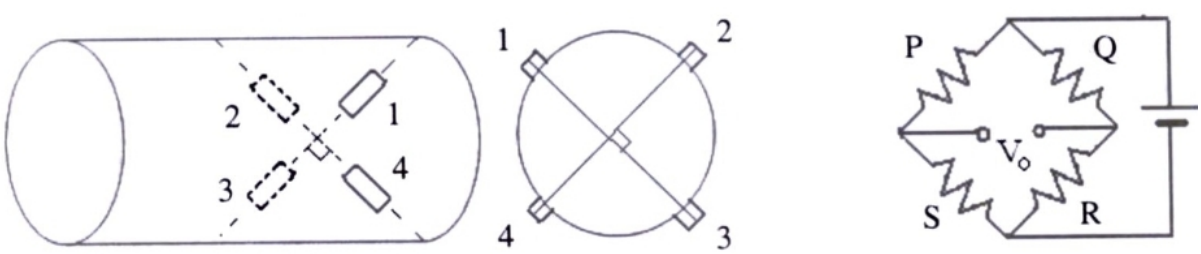


Fig. 8. Strain Gauges fixed on a Cylindrical Shaft

A correct way to place these gauges in the bridge is:

(GATE IN 2009)

a) P-1, Q-2, R-3, S-4
b) P-1, Q-3, R-2, S-4
c) P-3, Q-1, R-2, S-4
d) P-2, Q-1, R-3, S-4

33) In the circuit shown in Fig. 9, the Zener diode has ideal characteristics and a breakdown voltage of 3.2V.The output voltage $V_o$ for an input voltage $V_i = +1V$ is closest to

(GATE IN 2009)

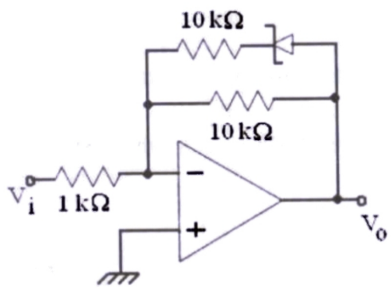


Fig. 9. Circuit Diagram

a) −10V
b) −6.6V
c) −5V
d) −3.2V

34) The input resistance of the circuit shown in Fig. 10, assuming an ideal op amp, is

(GATE IN 2009)

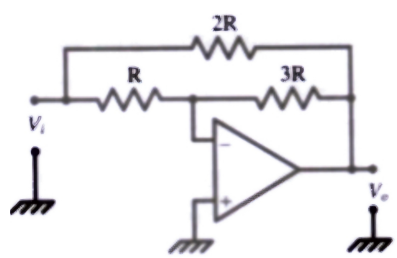


Fig. 10. Circuit Diagram

a) R/3
b) 2R/3
c) R
d) 4R/3

35) In the circuit shown in Fig. 11, the switch S has been in Position 1 for a long time. It is then moved to Position 2. Assume the Zener diodes to be ideal. The time delay between the switch moving to Position 2 and the transition in the output voltage $V_o$ is

(GATE IN 2009)

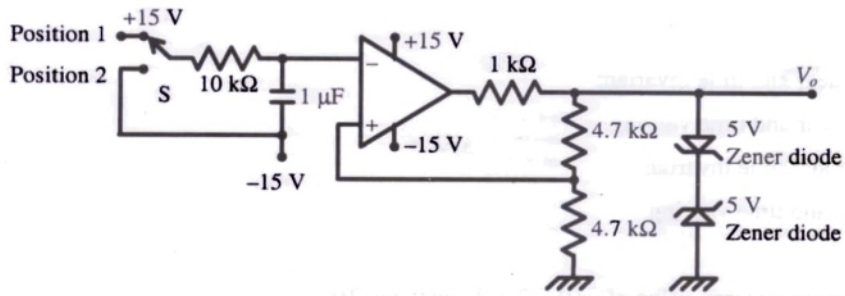


Fig. 11. Circuit Diagram

a) 5.00ms
b) 8.75ms
c) 10.00ms
d) 13.75ms

36) .

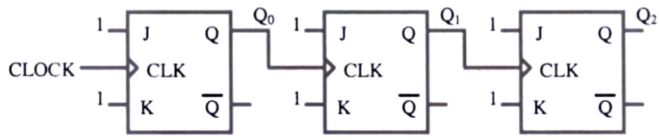


Fig. 12. Circuit Diagram

Fig. 12 above shows a 3-bit ripple counter, with $Q_2$ as the MSB. The flip-flops are rising edge-triggered. The counting direction is

(GATE IN 2009)

a) always down
b) always up
c) up or down depending on initial state of $Q_0$ only
d) up or down depending on the initial states of $Q_2$, $Q_1$ and $Q_0$

37) An 8-bit ADC with 2's complement output, has a nominal input range of −2V to +2V. It generates a digital code of 00H for an analog input in the range −7.8125mV to +7.8125mV. An input of −1.5V will produce a digital output of

(GATE IN 2009)

a) 90H
b) 96H
c) 9BH
d) A0H

38) The following is an assembly language program for 8085 microprocessors

| Address | Instruction Code | Mnemonic |
|---|---|---|
| 1000H | 3E 06 | MVI A, 06H |
| 1002H | C6 70 | ADI 70H |
| 1004H | 32 07 10 | STA 1007H |
| 1007H | AF | XRA A |
| 1008H | 76 | HLT |

When this program halts, the accumulator contains

(GATE IN 2009)

a) 00H b) 06H c) 70H d) 76H

39) For the input $x(t)$, an ideal impulse sampling system produces the output $y(t) = \sum_{k=-\infty}^{\infty} x(kT)\,\delta(t - kT)$, where $\delta(t)$ is the Dirac delta function. The system is

(GATE IN 2009)

a) nonlinear and time invariant
b) nonlinear and time varying
c) linear and time invariant
d) linear and time varying

40) The root mean squared value of $x(t) = 3 + 2\sin(t)\cos(2t)$

(GATE IN 2009)

a) $\sqrt{3}$ b) $\sqrt{8}$ c) $\sqrt{10}$ d) $\sqrt{11}$

41) An analog signal is sampled at 9kHz. The sequence so obtained is filtered by an FIR filter with transfer function $H[z] = 1 - z^{-6}$. One of the analog frequencies for which the magnitude response of the filter is zero is

(GATE IN 2009)

a) 0.75kHz b) 1kHz c) 1.5kHz d) 2kHz

42) The transfer function $H(z)$ of a fourth-order linear phase FIR system is given by $H(z) = (1 + 2z^{-1} + 3z^{-2})G(z)$. Then $G(z)$ is

(GATE IN 2009)

a) $3 + 2z^{-1} + z^{-2}$ b) $1 + \frac{1}{2}z^{-1} + \frac{1}{3}z^{-2}$ c) $\frac{1}{3}^{-1} + 2z^{-1} + z^{-2}$ d) $1 + 2z + 3z^2$

43) The dc potentiometer shown in the figure has a working current of 10mA with switch S open. Let $R_g + R_1 = 100\Omega$. The galvanometer G can only detect currents greater than $10\mu$A. The maximum percentage error in the measurement of the unknown emf $E_x$ as calculated from the slider position shown in Fig. 13 is closest to

(GATE IN 2009)

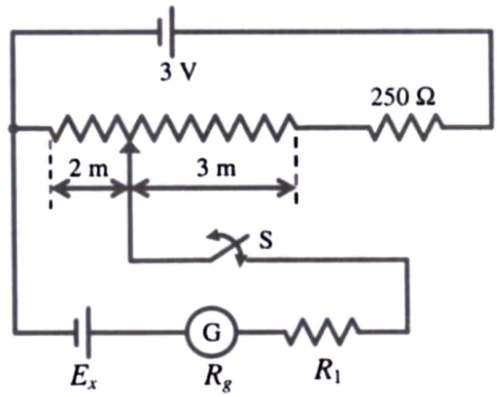


Fig. 13. DC Potentiometer

a) 0.3 b) 0.5 c) 0.6 d) 1.0

44) A filter is represented by the signal flow graph shown in Fig. 14. Its input is $x(t)$ and output is $y(t)$. The transfer function of the filter is

(GATE IN 2009)

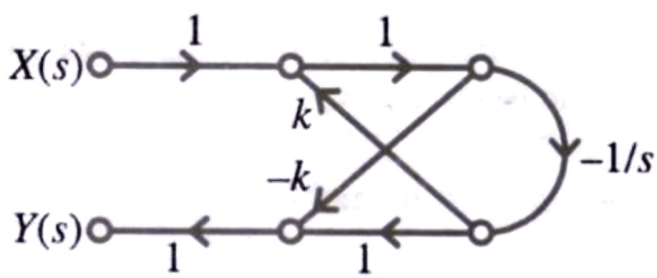


Fig. 14. Signal flow graph

a) $\frac{-(1+ks)}{s+k}$
b) $\frac{(1+ks)}{s+k}$
c) $\frac{-(1-ks)}{s+k}$
d) $\frac{(1-ks)}{s+k}$

45) A unity feedback control loop with an open loop transfer function of the form $\frac{K}{s(s+a)}$ has a gain crossover frequency of 1 rad/s and a phase margin of 60°. If an element having a transfer function $\frac{s-\sqrt{3}}{s+\sqrt{3}}$ is inserted into the loop, the phase margin will become

(GATE IN 2009)

a) 0° b) 30° c) 45° d) 60°

46) A linear time-invariant single-input single-output system has a state space model given by

$$\frac{d\mathbf{x}}{dt} = \mathbf{F}\mathbf{x} + \mathbf{G}u \tag{1}$$

$$y = \mathbf{H}\mathbf{x} \tag{2}$$

where $\mathbf{F} = \begin{pmatrix} 0 & 1 \\ -4 & -2 \end{pmatrix}; \mathbf{G} = \begin{pmatrix} 0 \\ 1 \end{pmatrix}; \mathbf{H} = \begin{pmatrix} 1 & 0 \end{pmatrix}$.

Here $\mathbf{x}$ is the state vector, $u$ is the input and $y$ is the output.
The damping ratio of the system is

(GATE IN 2009)

a) 0.25 b) 0.5 c) 1 d) 2

47) A unity feedback system has the transfer function

$$\frac{K(s+b)}{s^2(s+20)}$$

The value of $b$ for which the loci of all the three roots of the closed loop characteristic equation meet at a single point is

(GATE IN 2009)

a) $\frac{10}{9}$ b) $\frac{20}{9}$ c) $\frac{30}{9}$ d) $\frac{40}{9}$

48) A standard three-lead frontal plane ECG is taken with a normal heart. The peak amplitude of the R-wave is

(GATE IN 2009)

a) greatest in lead I
b) greatest in lead II
c) greatest in lead III
d) equal in all the leads

49) The operating voltage of an X-ray tube is changed from 40kV to 50kV. The resulting change in the shortest wavelength generated is

(GATE IN 2009)

a) +20% b) −20% c) +25% d) −36%

50) In a pulsed ultrasound imaging system, a single 5MHz crystal is used both as source and as detector. Bursts of at least 20 cycles are needed for acceptable image quality. The velocity of sound in the tissue being imaged is 1500m/s. The minimum distance of the objects to be imaged should be

(GATE IN 2009)

a) 12mm b) 6mm c) 3mm d) 1mm

## Common Data Questions

**Common Data for Questions** 51 **to** 52

Fig. 15 shows a sample-and-hold circuit using a MOSFET as a switch. The threshold voltage of the MOSFET is +2V. It has zero leakage current in the off state. Assume that the capacitor is ideal.

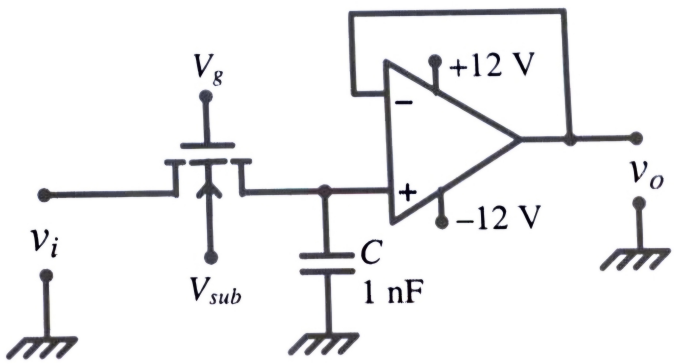


Fig. 15. Sample-and-Hold Circuit

51) The input voltage $v_i$ ranges from −5V to +5V. Appropriate values of $V_{sub}$, of $V_g$ during sampling, and of $V_g$ during hold are, respectively

(GATE IN 2009)

a) +12V, ≥ +7V, and ≤ −3V
b) −12V, ≥ +3V, and ≤ −7V
c) +12V, ≥ +3V, and ≤ −7V
d) −12V, ≥ +7V, and ≤ −3V

52) The circuit is used at a sampling rate of 1kHz, with an A/D converter having a conversion time of 200$\mu$s. The op amp has an input bias current of 10nA. The maximum hold error is

(GATE IN 2009)

a) 1mV
b) 2mV
c) 5mV
d) 10mV

**Common Data for Questions** 53 **and** 54**:**
The circuit shown in Fig. 16 uses three identical transistors with $V_{BE}$ = 0.7V and $\beta$ = 100. Given $R_1 = R_2 = R_3$ = 1kΩ, $kTlq_e$ = 25mV. The collector current of transistor $Q_3$ is 2mA.

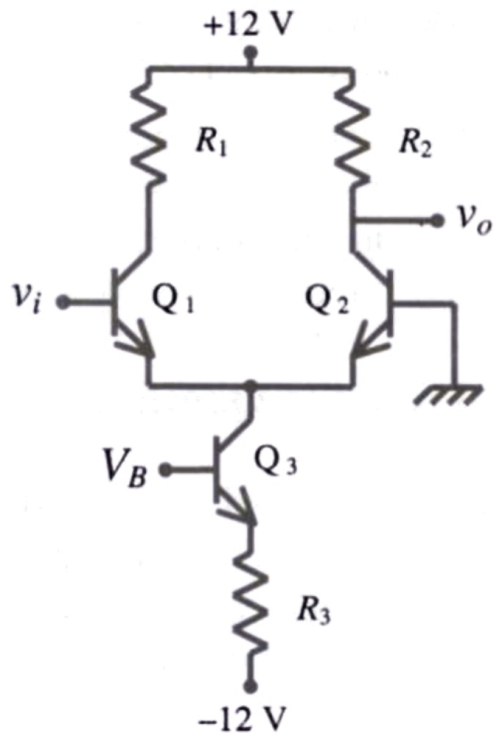


Fig. 16. Circuit Diagram

53) The bias voltage $V_B$ at the base of the transistor $Q_3$ is approximately

(GATE IN 2009)

a) −9.3V b) −10V c) −10.3V d) −11.0V

54) The small-signal voltage gain of the circuit is

(GATE IN 2009)

a) 20
b) −40
c) 20
d) 40

**Common Data for Questions** 55 **and** 56**:**
Fig. 17 shows an arrangement for measuring small angular displacements in a vertical plane. A non-conducting tube of length $2l$ and rectangular cross section (width $w$, height $d$) is bent along an arc of a circle with radius $R >>> d$ centered at P. Four electrode plates of length $l$ and width $w$ are placed to form two curved parallel plate capacitors $C_1$ and $C_2$ with a negligible gap between them. The tube contains water with an air bubble of rectangular cross section (width $w$, height $d$) and length $l/4$. The capacitors are connected in a bridge circuit as shown in the figure, where the bridge has ac excitation $v_i$. Angular displacement $\Delta\theta$ occurs about the point P.

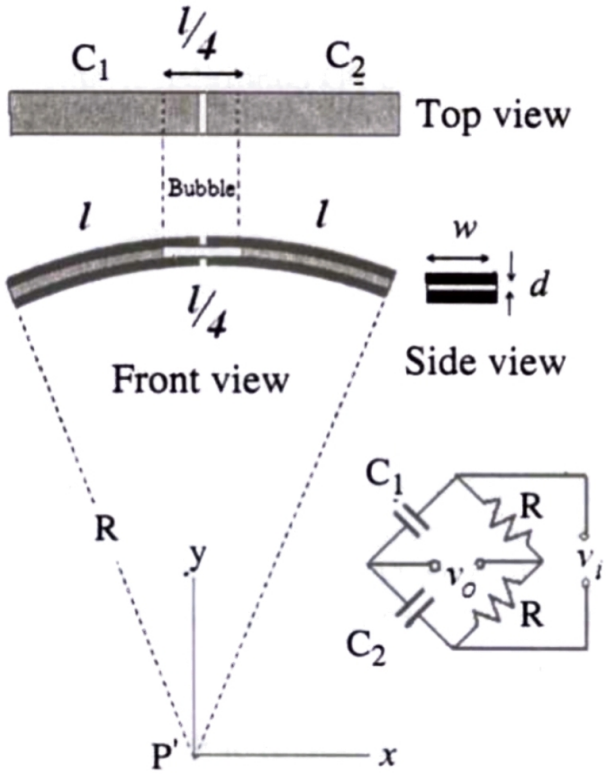


Fig. 17. Setup for measuring small displacements in vertical plane

55) The range of angular displacement (in radians) this system can measure is

(GATE IN 2009)

a) $-\frac{l}{8R}$ to $+\frac{l}{8R}$
b) $-\frac{l}{4R}$ to $+\frac{l}{4R}$
c) $-\frac{3l}{4R}$ to $+\frac{l}{4R}$
d) $-\frac{l}{R}$ to $+\frac{l}{R}$

56) The sensitivity $\frac{v_o/v_i}{\Delta\theta}$ is

(GATE IN 2009)

a) inversely proportional to $R$ and $l$
b) inversely proportional to $R$ and directly proportional to $l$
c) directly proportional to $R$ and $l$
d) directly proportional to $R$ inversely proportional and $l$

## Linked Answer Questions

**Statement for Linked Answer Questions** 57 **and** 58**:**

A disturbance input $d(t)$ is injected into the unity feedback control loop shown in Fig. 18. Take the reference input $r(t)$ to be a unit step.

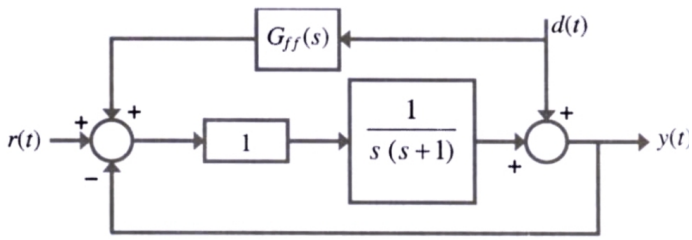


Fig. 18. For Questions 57 and 58

57) If the disturbance is measurable its effect on the output can be minimized significantly using a feed-forward controller $G_{ff}(s)$. To eliminate the component of the output due to $d(t) = sint$, $G_{ff}(j\omega)|_{\omega=1}$ should be

(GATE IN 2009)

a) $\frac{1}{\sqrt{2}}\angle -\frac{3\pi}{4}$ b) $\frac{1}{\sqrt{2}}\angle\frac{\pi}{4}$ c) $\sqrt{2}\angle\pi$ d) $\sqrt{2}\angle -\frac{\pi}{4}$

58) Let $G_{ff}(s)$ be a PD controller. If $d(t) = sin2t$, the amplitude of the frequency component of $y(t)$ due to $d(t)$

(GATE IN 2009)

a) $\sqrt{\frac{5}{13}}$ b) $\sqrt{\frac{9}{13}}$ c) $\sqrt{\frac{17}{13}}$ d) $\sqrt{\frac{20}{13}}$

**Statement for Linked Answer Question** 59 **and** 60**:**

A Michelson interferometer illuminated with a source of central wavelength $\lambda_0$ and spectral width $\Delta\lambda$ is adjusted for equal path difference for the beams returning from the two mirrors. When one of the mirrors is moved by a distance of 0.1mm from this position, 300 fringes move past the field of view. When the mirror is moved further, the fringes completely disappear when the mirror is approximately 4cm from the initial position.

59) The central wavelength of the source is

(GATE IN 2009)

a) 540nm b) 632.8nm c) 667nm d) 720nm

60) The spectral width of the source $\Delta\lambda$ is approximately

(GATE IN 2009)

a) 0.0056nm b) 0.0100nm c) 0.0500nm d) 0.1000nm