Eid Mubarak LED project with a Display

Component needs:

- **Esp32-S3**

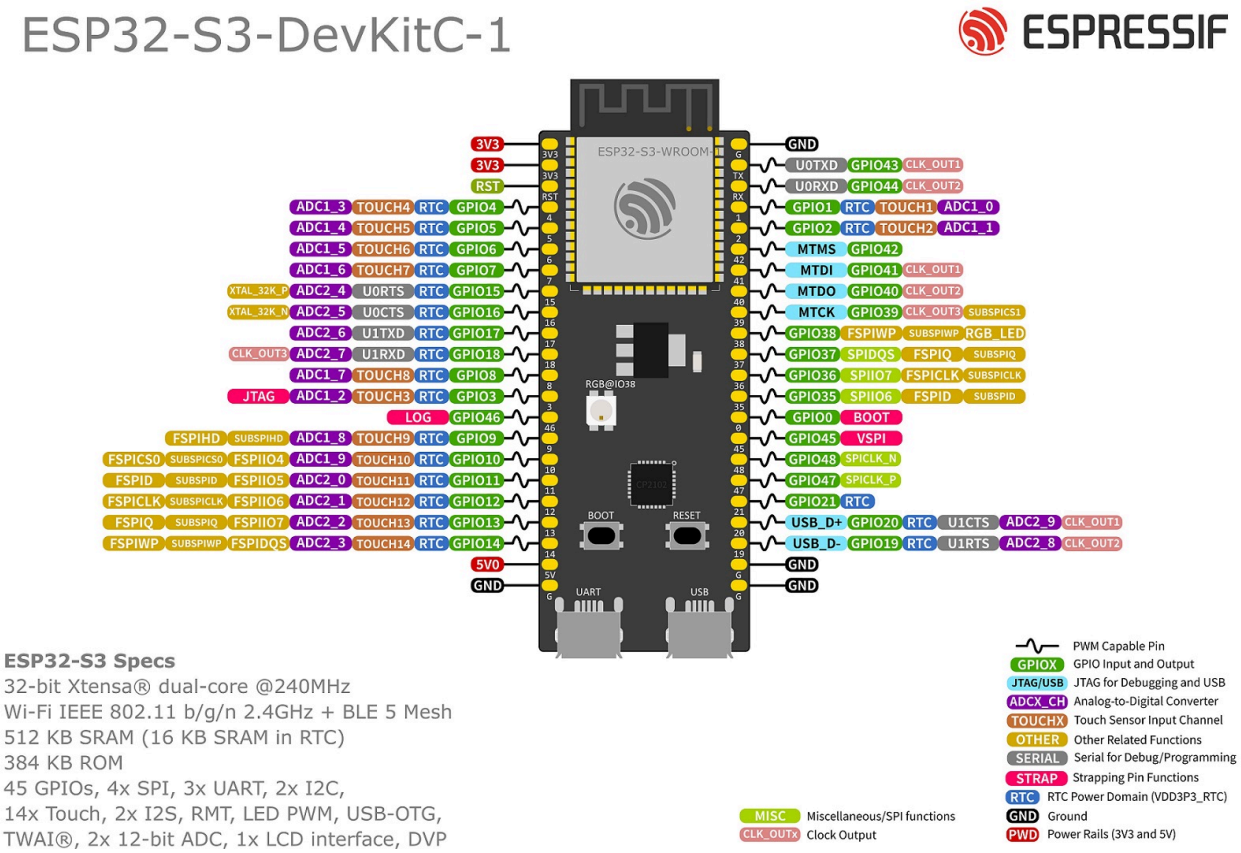

- **Microphone(INMP441):**

SIGNAL	PIN	PIN	SIGNAL
5V	1	21	GND
5V	2	22	I2C_M3_SCL
USB_DM	3	23	I2C_M3_SDA
USB_DP	4	24	GND
GND	5	25	I2C_AO_SCK
VCC_MCU	6	26	I2C_AO_SDA
MCU_NRST	7	27	3.3V
MCU_SWIM	8	28	GND
GND	9	29	I2SB_SCLK
ADC_CH0	10	30	I2S_MCLK0
1.8V	11	31	I2SB_SDO
ADC_CH3	12	32	I2SB_LRCK
SPDIF_OUT	13	33	I2SB_SDI
GND	14	34	GND
UARTC_RX	15	35	PWM_F
UARTC_TX	16	36	RTC_CLK
GND	17	37	GPIOH_4
Linux_RX	18	38	MCU_PA1
Linux_TX	19	39	GPIODZ_15
3.3V	20	40	GND

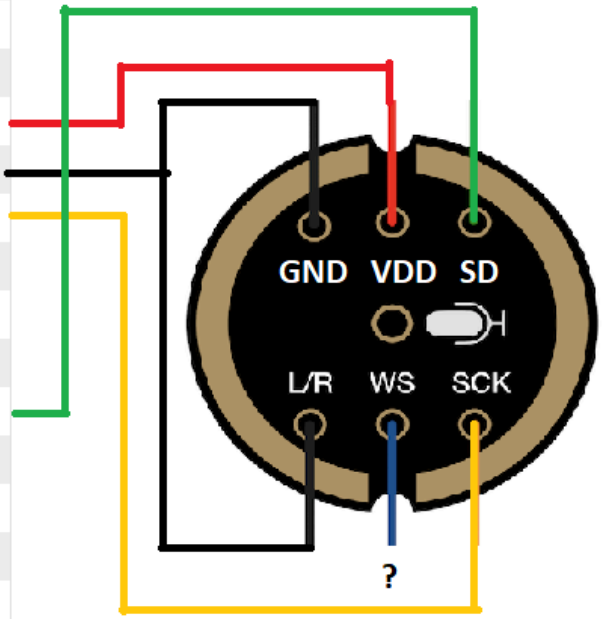

INMP441 microphone

VIM3L GPIO

- **Oled display:**

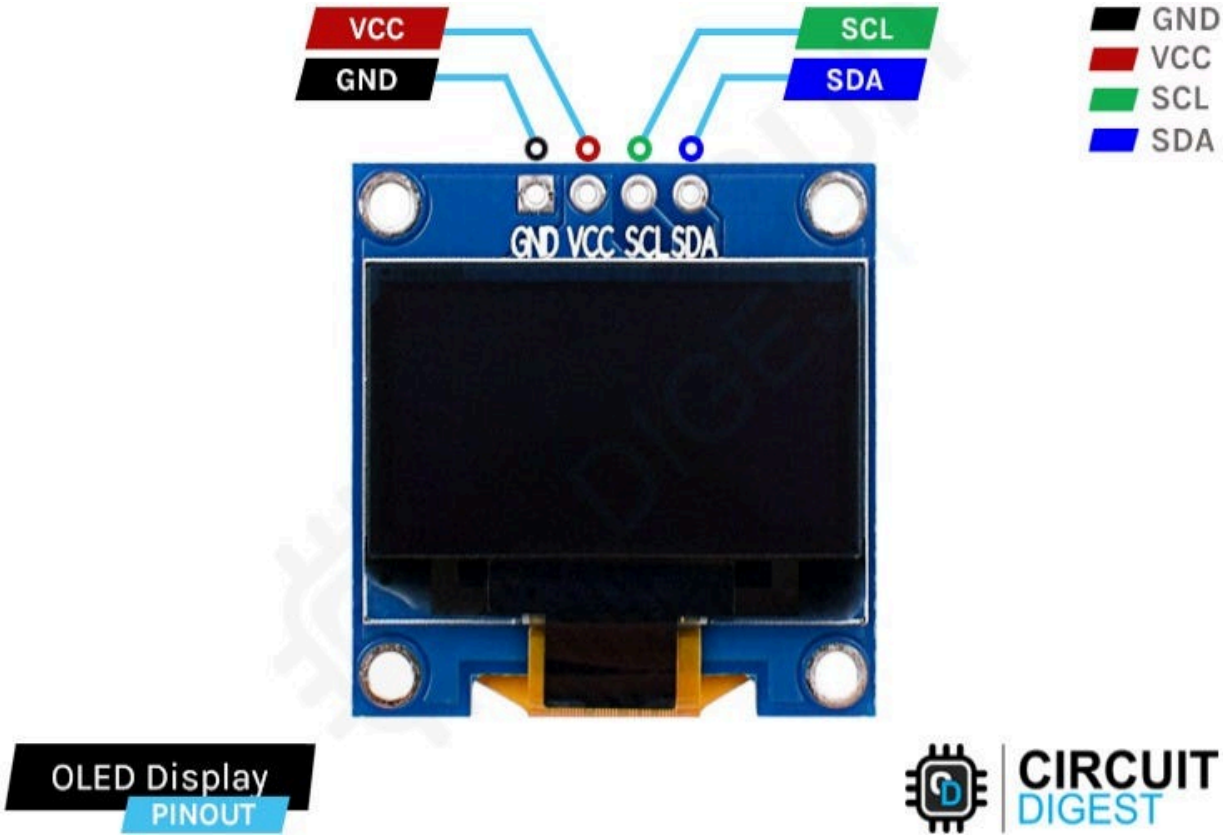

- **Some LED**
- **220K resistor**