Voor Maarten

donderdag 2 april 2026 12:24

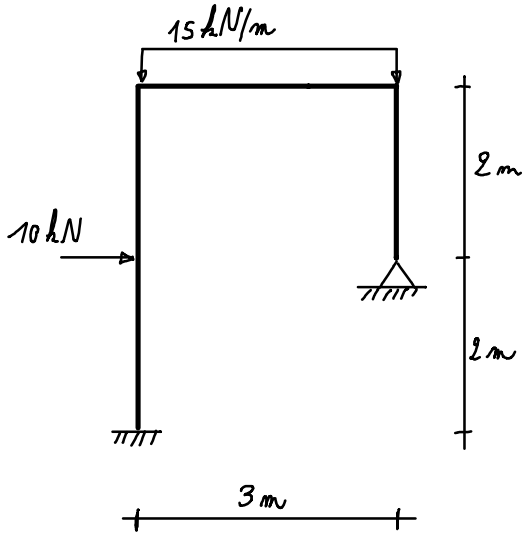

All members are steel grade S235, cross-section IPE240

- Give a graphical representation of the bending moments, including the most important values.
- Determine the vertical reaction force in the left support.
- Determine the maximum vertical displacement of the horizontal beam.

Solutions:

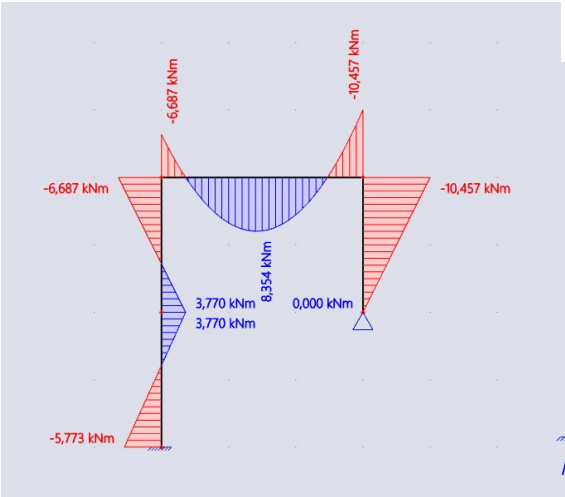
-6,687 kNm
-10,457 kNm
-6,687 kNm
-10,457 kNm
8,354 kNm
3,770 kNm
3,770 kNm
0,000 kNm
-5,773 kNm

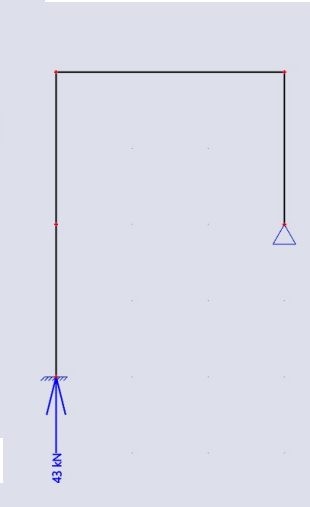
43 kN

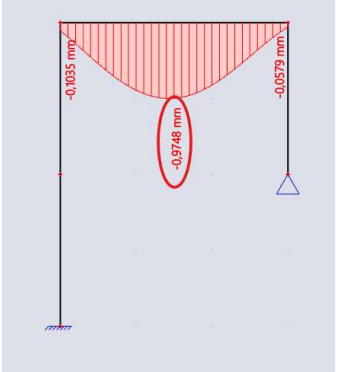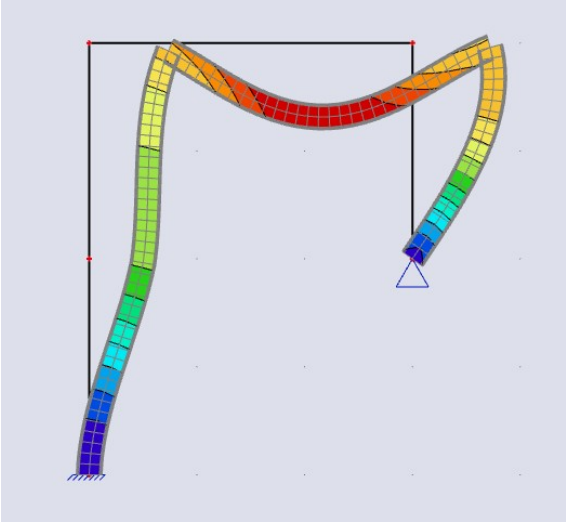
-0,1035 mm
-0,0579 mm
-0,9748 mm