American Journal of Physics

NOTES AND DISCUSSIONS | APRIL 01 2024

# Using a Minecraft virtual workspace for learning digital electronics FREE

Carl Faust

Check for updates

*Am. J. Phys.* 92, 317–319 (2024)
https://doi.org/10.1119/5.0170091

View Online
Export Citation

## Articles You May Be Interested In

Design and evaluate a stem-oriented education teaching plan by exploiting the strength of minecraft education game-based platform

*AIP Conf. Proc.* (May 2023)

Effectiveness of minecraft games on learning motivation to mathematics three-dimensional shapes elementary school student

*AIP Conf. Proc.* (November 2025)

Making Differentiation Magic in the Classroom with Minecraft

*Phys. Teach.* (November 2020)

08 April 2026 22:09:36

AAPT PHYSICS EDUCATION®

# Using a Minecraft virtual workspace for learning digital electronics

Carl Faust[a)]
*Susquehanna University, Selinsgrove, Pennsylvania 17870*

(Received 31 July 2023; accepted 14 January 2024)

A set of laboratory exercises are presented, which use the video game Minecraft as the environment for teaching combinational digital logic in an introductory electronics lab. Several advantages are noted when students use the virtual Minecraft environment prior to building any real digital circuits. © *2024 Published under an exclusive license by American Association of Physics Teachers.*
https://doi.org/10.1119/5.0170091

Many physics curricula offer some form of introductory electronics lab course. For many students, especially those with parallel interest in engineering or computer science, digital electronics is an important component of this course.[1] Although it is important for students to learn to build real circuits, frustration with troubleshooting simple breadboard errors can often get in the way of understanding the newly introduced conceptual ideas. In physics, more broadly, simulations are an effective tool to convey difficult concepts.[2,3] Within electronics, programs and online simulation tools such as CircuitVerse,[4] CircuitLab,[5] and Falstad Circuit Simulator[6] provide straightforward virtual workspaces for students to practice these foundational electronics concepts. The Minecraft video game is another option that can provide such an environment. Using Minecraft for this purpose offers an engaging way for students to collaboratively work through the concepts while still getting the immediate feedback they would from physical circuit building. Including Minecraft as a resource or teaching tool as an addition to other more standard software options provides instructors with an interesting, collaborative, and often entertaining way to overcome some of the common challenges within digital electronics labs.

This note will discuss (1) the learning goals, (2) an overview of the Minecraft video game and how it can be used for digital electronics, (3) the advantages of introducing combinational logic with Minecraft, and (4) a conclusion. A description of a sequence of lab activities implementing these ideas is provided as a supplementary material.[7]

## BASIC DIGITAL ELECTRONICS

Most introductory electronics courses that cover digital circuits will begin with a study of combinational logic. Combinational logic circuits take a set of binary input variables and apply a set of logic operations that result in a desired output. The information for how these variables and logical operations work together in a digital circuit is commonly represented in three ways: truth tables, logical statements, and circuit schematics. Typically, for a given application, one would construct a truth table for the given input variables that produces the desired output. Based on the truth table, a logical statement can be derived that accomplishes this output. Finally, a circuit schematic can be drawn that passes the input signals through the logic gates described by the logical statement. The schematic can then provide a blueprint for building the circuit with physical components on a breadboard. Figure 1 shows these three representations for a simple hallway light switch.

For simple digital circuits, the procedure for translating a truth table into a physical circuit is straightforward. However, for circuits with more inputs and/or complicated outputs, a Karnaugh map is often used as a tool for simplification. Figure 2 shows an example using four-input variables. The Karnaugh map rearranges the inputs and outputs in a specific way that allows for combinations to be identified, which results in a simpler logical statement than the truth table alone.[8] For example, in the Karnaugh map shown in Fig. 2, the grouping highlighted with the solid lined red box indicates that four of the possible outputs are ON if $A$ and $B$ are both OFF, regardless of the state of $C$ or $D$. By finding all such groupings, one can determine the simplest possible logical expression, which will, in turn, result in the simplest possible physical circuit.

By making use of the Karnaugh map technique, students are able to determine a simplified working circuit from a truth table with a given desired output. As will be described later, when learning this material for the first time, students can often encounter difficulty when putting into practice both the Karnaugh map technique and the physical circuit construction at the same time.

## MINECRAFT OVERVIEW

Minecraft is an open-world "sandbox"-style game where players interact with a randomly generated world by collecting and placing blocks and items. The game was first released in 2009 by Mojang and has since been released on multiple platforms, eventually becoming the best-selling video game of all time.[9] A quick poll of your students will likely show that a large portion of your class are familiar with or played the game at some point. In one of game's features, "Creative mode," players are allowed unlimited access to all blocks and items, so they can build without interacting with the more adventure focused "Survival mode." Minecraft: Education Edition, released in November 2016, is largely similar to the standard version of the game but has some features, detailed later, that make it ideal for the lab activities described in this paper.

For building the actual circuits, Minecraft contains a fairly robust system using a set of blocks and items known as "redstone." These redstone items can be used to create

08 April 2026 22:09:36

 © 2024 Published under an exclusive license by AAPT 

| A | B | X |
|---|---|---|
| 0 | 0 | 0 |
| 0 | 1 | 1 |
| 1 | 0 | 1 |
| 1 | 1 | 0 |

$$X = A'B + AB'$$

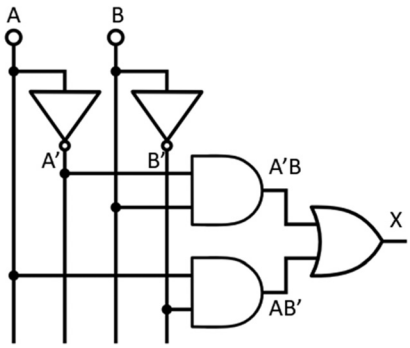


Fig. 1. Truth table (top left), logical statement (bottom left), and circuit schematic (right) for a simple hallway light switch in which two switches A and B are used to operate the same light X. The light should be ON (represented by a 1) when A or B is ON but not when both A and B are ON.

working digital electronic components in the Minecraft world. In the game, "redstone dust" acts as connecting wire, and various inputs such as torches, levers, and buttons provide an ON/OFF binary signal that can be used to power various in-game devices, such as lights, doors, pistons, or even musical blocks. Digital logic gates can be constructed using specific combinations of these items. Figure 3 shows an arrangement of redstone items that act as AND logic gates along with the corresponding digital electronic schematic. Lamps that are powered by the redstone are used to visualize the ON/OFF state of the input and output signals.

With a few minor exceptions, the redstone system functions exactly as a physical digital circuit would. The possibilities of the kinds of circuits that can be built are generally only limited by the user's building patience. Some players have taken the redstone system to the extreme by building working in-game computers and devices.[10]

## ADVANTAGES

Building digital circuits using redstone in Minecraft offers advantages over starting immediately with physical integrated circuit (IC) chips, wires, and breadboards. The redstone items add a visual component to the circuits indicating ON/OFF, and the redstone components may be arranged to match the layout shown in circuit diagrams. Figure 4 shows the working circuit built for the truth table given as an example in Fig. 2.

Game worlds can be easily imported or exported as a file, with a ".mcworld" extension allowing for instructors to prebuild worlds as well as "collect" worlds from students for grading. Minecraft: Education Edition allows students to easily work together in the same virtual world to collaboratively build large circuits. Finally, using the virtual environment for circuit building makes it possible to teach this material in a remote-learning or hybrid setting in an interesting and engaging way. The author adapted a version of these lab activities in lieu of in-person labs when remote instruction was required during the initial COVID-19 lockdown in late spring 2020.

One might note that a potential disadvantage of this approach is that students need to go through the extra effort to learn how to control and navigate the Minecraft game. Although many students are familiar with the Minecraft game before these exercises, those who have no experience with Minecraft or video games seem to quickly become adequately familiar with the game world and controls within the first activity or two. Students who have prior knowledge benefit from experiencing the course material through the lens of their own interest. Those who are new get to learn the game as an engaging vehicle for connecting with the material. Most likely, the classroom will have a mix of those who are and are not familiar with Minecraft. This tends to be a benefit, as those who have experience can share their enthusiasm and knowledge with their lab group all while collectively working together to understand and implement the new electronics concepts. Anecdotally, when students shift to building the physical circuits on breadboards, most students regardless of prior familiarity with Minecraft comment that beginning with the virtual circuits was helpful.

| A | B | C | D | X |
|---|---|---|---|---|
| 0 | 0 | 0 | 0 | 1 |
| 0 | 0 | 0 | 1 | 1 |
| 0 | 0 | 1 | 0 | 1 |
| 0 | 0 | 1 | 1 | 1 |
| 0 | 1 | 0 | 0 | 0 |
| 0 | 1 | 0 | 1 | 0 |
| 0 | 1 | 1 | 0 | 0 |
| 0 | 1 | 1 | 1 | 1 |
| 1 | 0 | 0 | 0 | 1 |
| 1 | 0 | 0 | 1 | 0 |
| 1 | 0 | 1 | 0 | 1 |
| 1 | 0 | 1 | 1 | 0 |
| 1 | 1 | 0 | 0 | 1 |
| 1 | 1 | 0 | 1 | 0 |
| 1 | 1 | 1 | 0 | 1 |
| 1 | 1 | 1 | 1 | 0 |

| AB\CD | 00 | 01 | 11 | 10 |
|---|---|---|---|---|
| 00 | 1 | 1 | 1 | 1 |
| 01 | 0 | 0 | 1 | 0 |
| 11 | 1 | 0 | 0 | 1 |
| 10 | 1 | 0 | 0 | 1 |

$$X = A'B' + AD' + A'CD$$

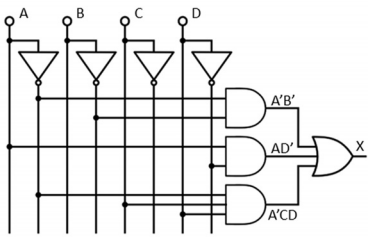


Fig. 2. Truth table (left), Karnaugh map (top right), logical statement (middle right), and circuit diagram (bottom right) for a sample of four-input digital circuit.

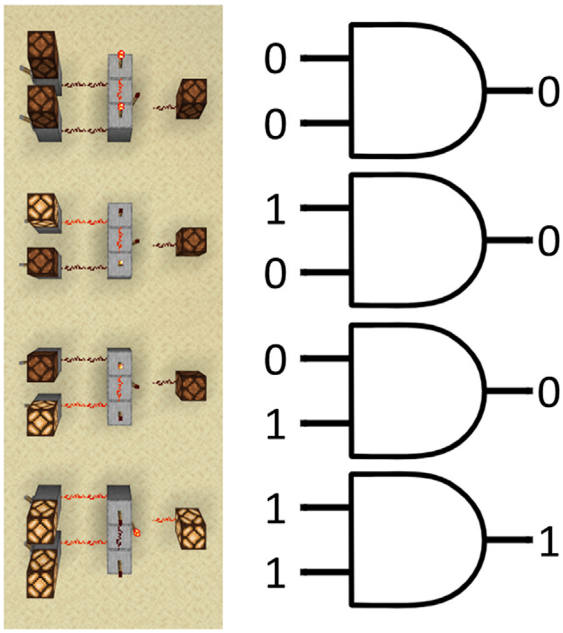


Fig. 3. (Left) Four AND logic gates built in Minecraft showing all possible input combinations. Gates are built using a particular arrangement of blocks, redstone dust, and redstone torches. (Right) Corresponding circuit schematic symbols showing the equivalent input and output combinations.

08 April 2026 22:09:36

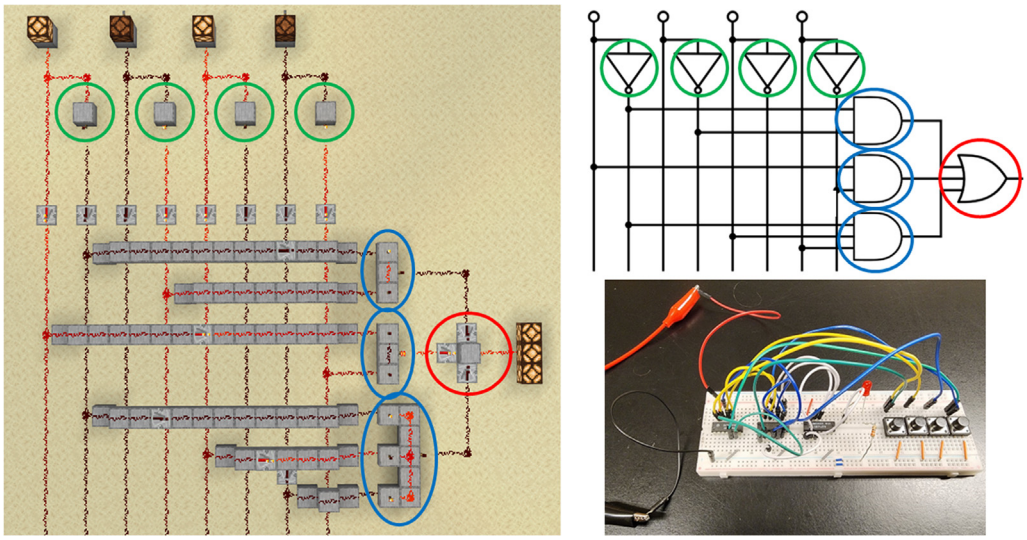

Fig. 4. (Left) Top down, aerial view of functioning testable circuit built in Minecraft for the example shown in Fig. 2. (Top right) Colored circles indicate corresponding logic gate components between the Minecraft circuit and the schematic (Green—NOT gates, Blue—AND gates, and Red—OR gates). (Bottom right) Physical circuit for the same example using logic gate ICs and input buttons.

## CONCLUSION

An approach to introducing combinational digital logic in an introductory electronics course using the video game, Minecraft, was discussed. A detailed list of the lab activities including handouts is available in the supplementary material. These activities have been implemented successfully in the author's Digital and Analog Electronics course as well as a session in a summer high school engineering camp for several years. The ability to separate the concepts of truth tables and Karnaugh maps from the construction of a physical circuit on a breadboard allows students to follow a more focused path through the material and to develop an intuition for testing circuits and troubleshooting errors. The Minecraft environment itself enables broader student collaboration as well as an easy way for instructors to distribute, collect, and review circuits. The redstone system used to build the circuits described in these activities is extensive and could easily be used to develop activities for more advanced digital electronics concepts. The author encourages readers to experiment with the Minecraft environment as a teaching tool and welcomes any suggestions or new ideas for making use of this as a tool for the physics laboratory.


## ACKNOWLEDGMENTS

The author would like to acknowledge Susquehanna University's Center for Teaching and Learning for a Teaching Technology Innovation Grant that led to this work.


## AUTHOR DECLARATIONS

### Conflict of Interest

The author has no conflicts of interest to disclose.


[a]ORCID: 0000-0003-4089-6035.



[1]Dennis C. Henry, "Resource Letter: TE-1: Teaching electronics," Am. J. Phys. **70**(1), 14–23 (2002).

[2]Herbert James Banda and Joseph Nzabahimana, "Effect of integrating physics education technology simulations on students' conceptual understanding in physics: A review of literature," Phys. Rev. Phys. Educ. Res. **17**(2), 023108 (2021).

[3]C. E. Wieman, W. K. Adams, P. Loeblein, and K. K. Perkins, "Teaching physics using PhET simulations," Phys. Teach. **48**(4), 225–227 (2010).

[4]See <https://circuitverse.org/> for "Digital Circuit Simulation Platform."

[5]See <https://www.circuitlab.com/> for "Online, In-Browser Tools for Schematic Capture and Circuit Simulation."

[6]See <https://www.falstad.com/circuit/> for "Free Software for Circuit Simulation Developed by Paul Falstad."

[7]See supplementary material online for a suggested lab activity sequence with accompanying handouts.

[8]Thomas L. Floyd, *Digital Fundamentals*, 11th ed. (Pearson, Upper Saddle River, NJ, 2014).

[9]See <https://news.xbox.com/en-us/wp-content/uploads/sites/2/2021/04/Minecraft-Franchise-Fact-Sheet_Oct.-2021.pdf> for "Minecraft Franchise Fact Sheet" (accessed July 28, 2023).

[10]Katie Wickens, https://www.pcgamer.com/minecraftception-redstone-pc-chungus/ for "Someone Crafted a Redstone PC in Minecraft to play Minecraft inside Minecraft, *PC Gamer* (2022)" (accessed July 28, 2023).



08 April 2026 22:09:36